Panasonic



Ceiling Radiation Damper

PC-RD06C6

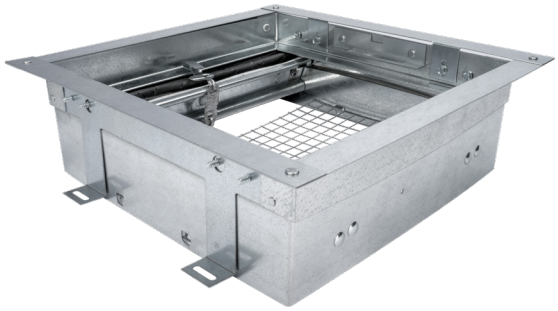

- Folded ceramic curtain style damper to meet both Combustible and Non-Combustible UL Assemblies
- Allows for two-stage construction; fan housing and damper sleeve during framing, fan/motor/damper installation after finishes
- Easy access to fan/motor/damper for maintenance
- Approved for most Panasonic 10 1/4" 50 – 150 CFM fans*, fan/lights and fans with motion sensor
- Galvanized steel frame with 73.89°C (165°F) fusible link
- High temperature, non-asbestos, reinforced fiber thermal fabric damper

ADDITIONAL BENEFITS

- For use in 1, 2, and 3 hour rated floor-ceiling and roof-ceiling constructions (UL 555C and UL 263)
- 5 year warranty

*Please see product submittal for approved model numbers

File #: 3225-1598:100

All-in-one flexible radiation damper for combustible and non-combustible assemblies.

PC-RD06C6

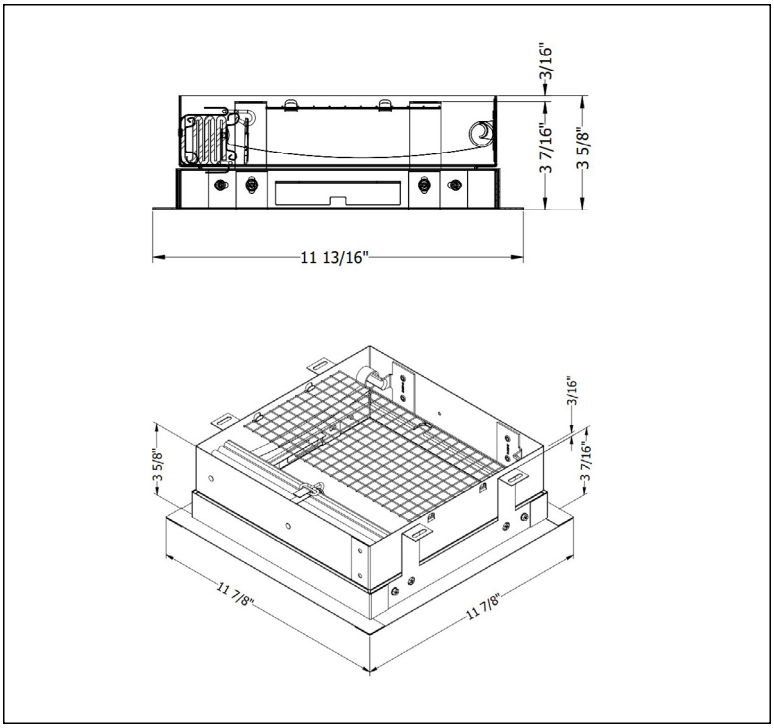

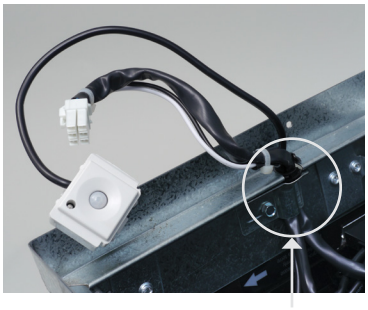

Integrated metal notch allows for easy installation of lights and motion sensors

Kit includes:

- Radiation damper
- Galvanized steel frame
- Mounting screws for frame to fan housing
- Clip and grommets to secure wire/pigtail
- Plaster guard
- Installation guide
- Warranty information

Damper Model PC-RD06C6	UL Approved for the Following Fan Models:
	WhisperGreen® Select, WhisperCeiling® DC, WhisperSense® DC, WhisperFit® DC, WhisperValue® DC Please see product submittal for approved model numbers

NON-COMBUSTIBLE ASSEMBLY

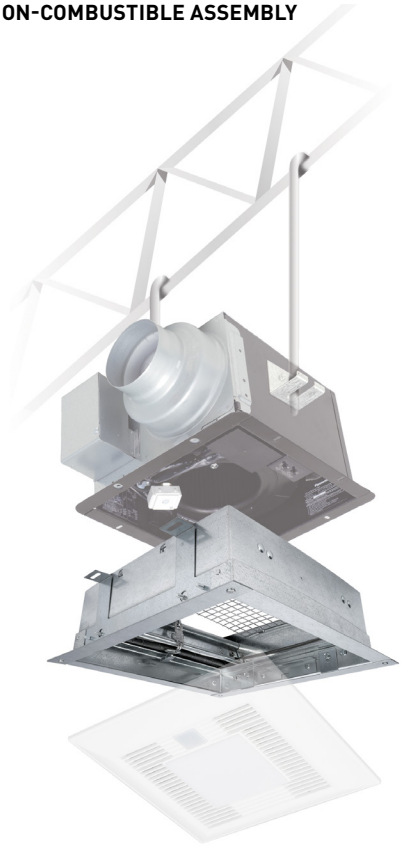

COMBUSTIBLE ASSEMBLY

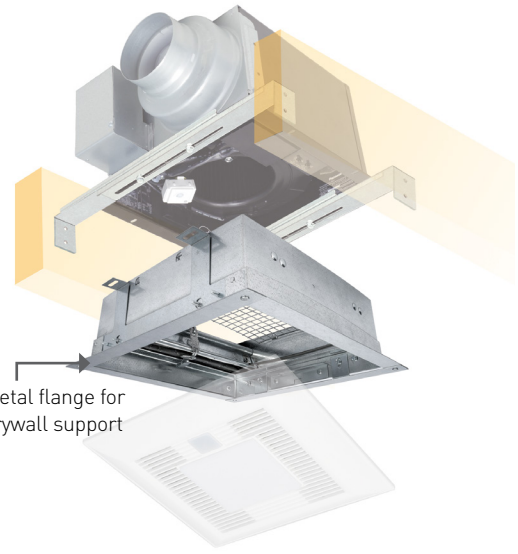

Metal flange for drywall support

Panasonic Canada Inc.
5770 Ambler Dr.
Mississauga, ON
L4W 2T3
na.panasonic.ca/indoor-air-quality

For Order Information
Phone: (800) 669-5165
Fax: (905) 238-2414
Email: **ventilationfans@ca.panasonic.com**

Design and specifications subject to change without notice.