Availability of replacement parts, repair services, and information for maintenance or repair

Spare parts

Available through authorized dealer/contractor only

Repair services

Available through authorized dealer/contractor only

Information for maintenance or repair

Customer maintenance covered in Owner's Manual

SPLIT HORIZONTAL-VERTICAL DUCT AIR CONDITIONER INDOOR UNIT

Owner's Manual & Installation Manual

Panasonic®

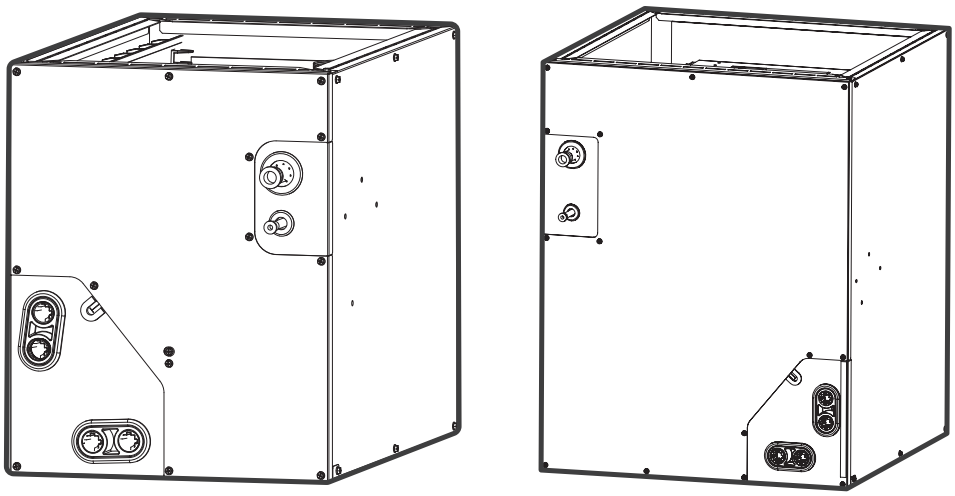

IMPORTANT NOTE:

Read this manual carefully before installing or operating your new air conditioning unit. Make sure to save this manual for future reference.

CONTENTS

SAFETY PRECAUTIONS 02
INDOOR UNIT PARTS AND MAJOR FUNCTIONS 18
CARE AND MAINTENANCE 20
TROUBLESHOOTING 22
ACCESSORIES 25
INDOOR UNIT INSTALLATION 26
WIRING PRECAUTIONS 42
TEST RUN 50

Read this manual

Inside you'll find many helpful hints on how to use and maintain your air conditioner properly. Just a little preventive care on your part can save you a great deal of time and money over the life of your air conditioner. These instructions may not cover every possible condition of use, so common sense and attention to safety is required when installing, operating and maintaining this product.

SAFETY PRECAUTIONS

It is really important that you read Safety Precautions Before Operation and Installation. Incorrect installation due to ignoring instructions can cause serious damage or injury. The seriousness of potential damage or injuries is classified as either a WARNING or CAUTION.

Explanation of Symbols

WARNING

This symbol indicates the possibility of personal injury or loss of life.

CAUTION

This symbol indicates the possibility of property damage or serious consequences.

⚠ WARNING

This appliance is not intended for use by persons (including children) with reduced physical, sensory or mental capabilities, or lack of experience and knowledge, unless they have been given supervision or instruction concerning use of the appliance by a person responsible for their safety. Children should be supervised to ensure that they do not play with the appliance.

⚠ WARNING FOR PRODUCT USE

- Turn off the air conditioner and disconnect the power before performing any cleaning, installation or repairing. Failure to do so can cause electric shock.
- If an abnormal situation arises (like a burning smell), immediately turn off the unit and disconnect the power. Call your dealer for instructions to avoid electric shock, fire or injury.
- Do not insert fingers, rods or other objects into the air inlet or outlet. This may cause injury, since the fan may be rotating at high speeds.
- Do not use flammable sprays such as hair spray, lacquer or paint near the unit. This may cause fire or combustion.
- Do not operate the air conditioner in places near or around combustible gases. Emitted gas may collect around the unit and cause explosion.
- Do not operate your air conditioner in a wet room such as a bathroom or laundry room. Too much exposure to water can cause electrical components to short circuit.
- Do not expose your body directly to cool air for a prolonged period of time.
- Do not allow children to play with the air conditioner. Children must be supervised around the unit at all times.
- If the air conditioner is used together with burners or other heating devices, thoroughly ventilate the room to avoid oxygen deficiency.
- In certain functional environments, such as kitchens, server rooms, etc., the use of specially designed air-conditioning units is highly recommended.

⚠ WARNINGS FOR PRODUCT INSTALLATION

- Turn off the air conditioner and disconnect the power before performing any installation or repairs. Failure to do so can cause electric shock.
- Installation must be performed by an authorized dealer or specialist according to the installation instructions. Improper installation can cause water damage, electrical hazard or fire. Contact an authorized service technician for repair or maintenance.
- This appliance shall be installed in accordance with national wiring regulations.
- Only use the included accessories, parts, and specified parts for installation.
- Using non-standard parts can cause water leakage, electrical shock, fire, and can cause the unit to fail.
- Install the unit in a firm location that can support the unit's weight. If the chosen location cannot support the unit's weight, or the installation is not done properly, the unit may drop and cause serious injury and damage.
- Install drainage piping according to the instructions in this manual. Improper drainage may cause water damage to your home and property.
- For units that have an auxiliary electric heater, do not install the unit within 1 meter (3 feet) of any combustible materials.
- For the units that have a wireless network function, the USB device access, replacement, maintenance operations must be carried out by professional staff.
- Do not install the unit in a location that may be exposed to combustible gas leaks. If combustible gas accumulates around the unit, it may cause fire.
- Do not turn on the power until all work has been completed.
- When moving or relocating the air conditioner, consult experienced service technicians for disconnection and reinstallation of the unit.
- How to install the appliance to its support, please read the information for details in "indoor unit installation" and "outdoor unit installation" sections.

TAKE NOTE OF FUSE SPECIFICATIONS

The air conditioner's circuit board (PCB) is designed with a fuse to provide overcurrent protection. The specifications of the fuse are printed on the circuit board, for example: T3.15AL/250VAC, T5AL/250VAC, T3.15A/250VAC, T5A/250VAC, T20A/250VAC, T30A/250VAC,etc.
NOTE: Only the blast-proof ceramic fuse can be used.

⚠ ELECTRICAL WARNINGS

- The power supply of the Mini Interface must meet the requirements of safety isolation.
- Before obtaining access to terminals, all supply circuits must be disconnected.
- Risk of electric shock. Can cause injury or death. Disconnect all remote electric power supplies before servicing.
- The electronic control board only provides control signals and does not drive high-power loads. The external load power cannot exceed 15W.
- Only use the specified wire. If the wire is damaged, it must be replaced by the manufacturer, its service agent or similarly qualified persons in order to avoid a hazard.
- The product must be properly grounded at the time of installation, or electric shock may occur.

- For all electrical work, follow all local and national wiring standards, regulations, and the Installation Manual. Connect cables tightly, and clamp them securely to prevent external forces from damaging the terminal. Improper electrical connections can overheat and cause fire, and may also cause shock. All electrical connections must be made according to the Electrical Connection Diagram located on the panels of the indoor and outdoor units.
- All wiring must be properly arranged to ensure that the control board cover can close properly. If the control board cover is not closed properly, it can lead to corrosion and cause the connection points on the terminal to heat up, catch fire, or cause electric shock.
- Disconnection must be incorporated in the fixed wiring in accordance with the electrical local code.
- Do not share the electrical outlet with other appliances. Improper or insufficient power supply can cause fire or electric shock.
- If connecting power to fixed wiring, an all-pole disconnection device must be incorporated in the fixed wiring in accordance with the electrical local code.

CLEANING AND MAINTENANCE WARNINGS

- Turn off the device and disconnect the power before cleaning. Failure to do so can cause electric shock.
- Do not clean the air conditioner with excessive amounts of water.
- Do not clean the air conditioner with combustible cleaning agents. Combustible cleaning agents can cause fire or deformation.

⚠ CAUTION

- Turn off the air conditioner and disconnect the power if you are not going to use it for a long time.
- Turn off and unplug the unit during storms.
- Make sure that water condensation can drain unhindered from the unit.
- Do not operate the air conditioner with wet hands. This may cause electric shock.
- Do not use device for any other purpose than its intended use.
- Do not climb onto or place objects on top of the outdoor unit.
- Do not allow the air conditioner to operate for long periods of time with doors or windows open, or if the humidity is very high.

⚠ WARNING FOR USING FLAMMABLE REFRIGERANT

1. Installation (Space)
   - That the installation of pipe-work shall be kept to a minimum.
   - That pipe-work shall be protected from physical damage.
   - Where refrigerant pipes shall be compliance with national gas regulations.
   - That mechanical connections shall be accessible for maintenance purposes.
   - In cases that require mechanical ventilation, ventilation openings shall be kept clear of obstruction.
   - When disposing of the product is used, be based on national regulations, properly processed.

2. Servicing
   Any person who is involved with working on or breaking into a refrigerant circuit should hold a current valid certificate from an industry-accredited assessment authority, which authorizes their competence to handle refrigerants safely in accordance with an industry recognized assessment specification.
3. Maintenance and repair requiring the assistance of other skilled personnel shall be carried out under the supervision of the person competent in the use of flammable refrigerants.
4. Do not use any means to accelerate the defrosting process or to clean, other than those recommended by the manufacturer.
5. The appliance shall be stored in a room without continuously operating ignition sources (for example: open flames, an operating gas appliance or an operating electric heater).
6. Be more careful that foreign matter (oil, water, etc.) does not enter the piping. Also, when storing the piping, securely seal the opening by pinching, taping, etc.
7. Do not pierce or burn.
8. Be aware that refrigerants may not contain an odor.
9. All working procedure that affects safety means shall only be carried by competent persons.
10. Appliance shall be stored in a well-ventilated area where the room size corresponds to the room area as specific for operation.
11. The appliance shall be stored so as to prevent mechanical damage from occurring.
12. Joints shall be tested with detection equipment with a capability of 5 g/year of refrigerant or better, with the equipment in standstill and under operation or under a pressure of at least these standstill or operation conditions after installation.
13. The refrigerant leakage sensor shall be protected to prevent tampering or unauthorized resetting of the pre-set value. To be effective, the refrigerant leakage sensor must be electrically powered at all times after installation, other than when servicing. If the refrigerant sensor detects a refrigerant leak, the indoor unit will display an error code and emit a buzzing sound, the fan will be turned on to the maximum, the compressor or gas furnace heat source will stop running. You should immediately leave the leak area and notify a professional for handling. The indoor unit will display the error code “FHCC”. The refrigerant sensor cannot be repaired and can only be replaced by the certified technician. The service life of the refrigerant sensor is 15 years, and it should be replaced after the service life.

NOTE ABOUT FLUORINATED GASSES (NOT APPLICABLE TO THE UNIT USING R290 REFRIGERANT)

- This air-conditioning unit contains fluorinated greenhouse gasses. For specific information on the type of gas and the amount, please refer to the relevant label on the unit itself or the “Owner's Manual - Product Fiche ” in the packaging of the outdoor unit. (European Union products only).
- Installation, service, maintenance and repair of this unit must be performed by a certified technician.
- Product uninstallation and recycling must be performed by a certified technician.
- When the unit is checked for leaks, proper record-keeping of all checks is strongly recommended.

Tested external static pressure for performance is -75~0pa.

Room size restriction

The appliances are connected via an air duct system to one or more rooms, the bottom of the air outlet of the air duct in the room should be at a height ⩾7.3ft/2.2m from the floor.
In UL/CSA 60335-2-40, the R454B refrigerant belongs to mildly flammable refrigerants, which will limit the room area of the system service. Similarly, the total amount of refrigerant in the system should be less than or equal to the maximum allowable refrigerant charge, which depends on the room area serviced by the system.

NOTE

The nouns in this section are explained as follows :
Mc: The actual refrigerant charge in the system.
A: the actual room area where the appliance is installed.
Amin: The required minimum room area.
Mmax: The allowable maximum refrigerant charge in a room.
Qmin: The minimum circulation airflow.
Anvmin: The minimum opening area for connected rooms.
TAmin: The total area of the conditioned space (For appliances serving one or more rooms with an air duct system).
TA: The total area of the conditioned space connected by air ducts.

Refrigerant charge and room area limitations

For the purpose of determination of room area (A) when used to calculate the maximum allowable refrigerant charge (m_{max}) in an unventilated space, the following shall apply.
The room area (A) shall be defined as the room area enclosed by the projection to the floor of the walls, partitions and doors of the space in which the appliance is installed.
Spaces connected by only drop ceilings, ductwork, or similar connections shall not be considered a single space.
For units mounted higher than 6.0ft/1.8m, spaces divided by partition walls which are no higher than 5.3ft/1.6m shall be considered a single space.
For fixed appliances, rooms on the same floor and connected by an open passageway between the spaces can be considered a single room when determining compliance to Amin, if the passageway complies with all of the following.

- It is a permanent opening.
- It extends to the floor.
- It is intended for people to walk through.
  For fixed appliances, the area of the adjacent rooms, on the same floor, connected by permanent opening in the walls and/or doors between occupied spaces, including gaps between the wall and the floor, can be considered a single room when determining compliance to Amin, provided all of the following are met.
- The space shall have appropriate openings according to Sec.2.
- The minimum opening area for natural ventilation Anvmin shall not be less than the following:

Height of outlet/m	A/m²	Mc/kg	Mmax/kg	Anvmin/m²
2.2	5	5.0	2.685	0.045
2.2	6	5.0	2.941	0.042
2.2	7	5.0	3.177	0.038
2.2	8	5.0	3.396	0.035
2.2	9	5.0	3.602	0.031
2.2	10	5.0	3.797	0.028
2.2	11	5.0	3.983	0.024
2.2	12	5.0	4.160	0.020
2.2	13	5.0	4.330	0.016
2.2	14	5.0	4.493	0.013
2.2	15	5.0	4.651	0.009
2.2	16	5.0	4.803	0.005
2.2	17	5.0	4.951	0.001

Note: Take the Mc=5.0kg as an example. For appliances serving one or more rooms with an air duct system, the room area calculation shall be determined based on the total area of the conditioned space (TA) connected by ducts taking into consideration that the circulating airflow distributed to all the rooms by the appliance integral indoor fan will mix and dilute the leaking refrigerant before entering any room.

Opening conditions for connected rooms

When the openings for connected rooms are required, the following conditions shall be applied.

- The area of any openings above 300mm from the floor shall not be considered in determining compliance with Anvmin.
- At least 50% of the required opening area Anvmin shall be below 200mm from the floor.
- The bottom of the lowest openings shall not be higher than the point of release when the unit is installed and not more than 100mm from the floor.
- Openings are permanent openings which cannot be closed.
- For openings extending to the floor the height shall not be less than 20mm above the surface of the floor covering.
- A second higher opening shall be provided. The total size of the second opening shall not be less than 50% of minimum opening area for Anvmin and shall be at least 1.5 m above the floor.

NOTE: The requirement for the second opening can be met by drop ceilings, ventilation ducts, or similar arrangements that provide an airflow path between the connected rooms.

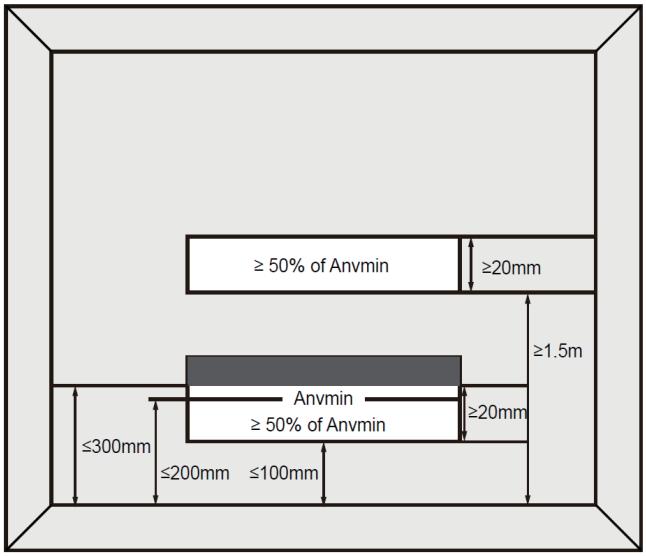

- The room into which refrigerant can leak, plus the connected adjacent room (s) shall have a total area of not less than TAmin.
- The room area in which the unit is installed shall be not less than 20 %TAmin.

NOTE

1. All joints made in the installation between parts of the REFRIGERATION SYSTEM shall be made with a brazed, welded, or mechanical connection before opening the valves to permit refrigerant to flow between the REFRIGERATION SYSTEM parts. A vacuum valve shall be provided to evacuate the interconnecting pipe or any uncharged REFRIGERATION SYSTEM part.
2. The minimum average fan airflow velocity is no less than 1,0 m/s (200 ft/min).
3. The refrigerant detection system shall de-energize the heat source when a leak is detected
4. The control system for coil shall be provided with a fan interlock designed to prevent operation of the heat pump unless the circulating fan is energized and preventing simultaneous operation of the heat pump and the installed fossil fuel furnace.

For R454B refrigerant charge amount and minimum room area:

The machine you purchased may be one of the types in the table below. The indoor and outdoor units are designed to be used together. Please check the machine you purchased. The minimum room area of operating or storage should be as specified in the following table:

Products series	Dimensions	Indoor unit	Outdoor unit
COIL	14.5"x21"x18"	CS-HM24BAAU1	CU-M18BAHU CU-HM18BAHU
	17.5"x21"x18"	CS-HM24BAAU2	CU-M18BAHU CU-HM18BAHU
	14.5"x21"x18"	CS-HM24BAAU1	CU-M24BAHU CU-HM24BAHU
	17.5"x21"x18"	CS-HM24BAAU2	CU-M24BAHU CU-HM24BAHU
	14.5"x21"x24"	CS-HM36BAAU1	CU-M30BAHU CU-HM30BAHU CU-M36BAHU CU-HM36BAHU
	17.5"x21"x24"	CS-HM36BAAU2	CU-M30BAHU CU-HM30BAHU CU-M36BAHU CU-HM36BAHU
	21"x21"x24"	CS-HM36BAAU3	CU-M30BAHU CU-HM30BAHU CU-M36BAHU CU-HM36BAHU
	21.5"x21.5"x28"	CS-HM60BAMU3	CU-M48BAHU CU-HM48BAHU CU-M60BAHU CU-HM55BAHU
	24.5"x21"x28"	CS-HM60BAAU4	CU-M48BAHU CU-HM48BAHU CU-M60BAHU CU-HM55BAHU

M_c or M_{REL} [oz/kg]	TA_{min} [ft²/m²]	M_c or M_{REL} [oz/kg]	TA_{min} [ft²/m²]	M_c or M_{REL} [oz/kg]	TA_{min} [ft²/m²]	M_c or M_{REL} [oz/kg]	TA_{min} [ft²/m²]
<=62.7/1.776	12/1.1	134/3.8	126/11.67	211.6/6.0	198/18.43	289.2/8.2	271/25.18
63.5/1.8	60/5.53	141.1/4	132/12.29	218.7/6.2	205/19.04	296.3/8.4	278/25.8
70.5/2	66/6.14	148.1/4.2	139/12.9	225.8/6.4	212/19.66	303.4/8.6	284/26.41
77.6/2.2	73/6.76	155.2/4.4	145/13.51	232.8/6.6	218/20.27	310.4/8.8	291/27.63
84.6/2.4	79/7.37	162.2/4.6	152/14.13	239.9/6.8	225/20.88	317.5/9.0	298/27.64
91.7/2.6	86/7.99	169.3/4.8	159/14.74	246.9/7.0	231/21.5	324.5/9.2	304/28.26
98.8/2.8	93/8.6	176.4/5	165/15.36	254/7.2	238/22.11	331.6/9.4	311/28.87
105.8/3	99/9.21	183.4/5.2	172/15.97	261/7.4	245/22.73	338.6/9.6	317/29.48
112.9/3.2	106/9.83	190.5/5.4	179/16.58	268.1/7.6	251/23.34	345.7/9.8	324/30.10
119.9/3.4	112/10.44	197.5/5.6	185/17.2	275.1/7.8	258/23.96	352.7/10.0	331/30.71
127/3.6	119/11.06	204.6/5.8	192/17.81	282.2/8.0	264/24.57		
Area formula	**TA_{min}** is the required minimum room area in ft²/m² **M_c** is the actual refrigerant charge in the system in oz/kg **M_{REL}** is the refrigerant releasable charge in oz/kg **h_{inst}** is the height of the bottom of the appliance relative to the floor of the room after installation. **WARNING:** The minimum room area or minimum room area of conditioned space is based on releasable charge and total system refrigerant charge.						

For R454B refrigerant charge amount and minimum airflow:

Please check the furnace you purchased. The minimum airflow of operating or storage should be as specified in the following table.

M_c (kg)	QH_{min} (m³/h)	M_c (kg)	QH_{min} (m³/h)	M_c (kg)	QH_{min} (m³/h)	M_c (kg)	QH_{min} (m³/h)	M_c (kg)	QH_{min} (m³/h)	M_c (kg)	QH_{min} (m³/h)
1.4	141.8918919	3.0	304.0540541	4.6	466.2162162	6.2	628.3783784	7.8	790.5405405	9.4	952.7027027
1.6	162.1621622	3.2	324.3243243	4.8	486.4864865	6.4	648.6486486	8.0	810.8108108	9.6	972.972973
1.8	182.4324324	3.4	344.5945946	5.0	506.7567568	6.6	668.9189189	8.2	831.0810811	9.8	993.2432432
2	202.7027027	3.6	364.8648649	5.2	527.027027	6.8	689.1891892	8.4	851.3513514	10.0	1013.513514
2.2	222.972973	3.8	385.1351351	5.4	547.2972973	7.0	709.4594595	8.6	871.6216216	10.2	1033.783784
2.4	243.2432432	4.0	405.4054054	5.6	567.5675676	7.2	729.7297297	8.8	891.8918919	10.4	1054.054054
2.6	263.5135135	4.2	425.6756757	5.8	587.8378378	7.4	750	9.0	912.1621622	10.6	1074.324324
2.8	283.7837838	4.4	445.9459459	6.0	608.1081081	7.6	770.2702703	9.2	932.4324324	10.8	1094.594595
Airflow formula	**QH_{min}** is the required minimum Airflow in m³/h **M_c** is the actual refrigerant charge in the system in kg **WARNING:** The minimum Airflow of conditioned space is based on releasable charge and total system refrigerant charge, and cooling full-load airflow not exceeding 400 scfm per specified ton of cooling.										

1. Installation (where refrigerant pipes are allowed)
   - Any person who is involved with working on or breaking into a refrigerant circuit should hold a current valid certificate from an industry-accredited assessment authority, which authorizes their competence to handle refrigerants safely in accordance with an industry recognized assessment specification.
   - Maintenance and repair requiring the assistance of other skilled personnel shall be carried out under the supervision of the person competent in the use of flammable refrigerants.
   - That the installation of pipe-work shall be kept to a minimum.
   - That pipe-work shall be protected from physical damage.
   - Where refrigerant pipes shall be compliance with national gas regulations.
   - That mechanical connections shall be accessible for maintenance purposes.
   - Be more careful that foreign matter (oil, water, etc.) does not enter the piping. Also, when storing the piping, securely seal the opening by pinching, taping, etc.
   - Appliance shall be stored in a well-ventilated area where the room size corresponds to the room area as specific for operation.
   - Appliance shall be stored in a well-ventilated area where the room size corresponds to the room area as specific for operation.
   - Joints shall be tested with detection equipment with a capability of 5 g/year of refrigerant or better, with the equipment in standstill and under operation or under a pressure of at least these standstill or operation conditions after installation. Detachable joints shall NOT be used in the indoor side of the unit (brazed, welded joint could be used).
   - In cases that require mechanical ventilation, ventilation openings shall be kept clear of obstruction.

2. When a FLAMMABLE REFRIGERANT is used, the requirements for installation space of appliance and /or ventilation requirements are determined according to
   - the mass charge amount (M) used in the appliance,
   - the installation location,
   - the type of ventilation of the location or of the appliance.
   - piping material, pipe routing, and installation shall include protection from physical damage in operation and service, and be in compliance with national and local codes and standards, such as ASHRAE 15, IAPMO Uniform Mechanical Code, ICC International Mechanical Code, or CSA B52. All field joints shall be accessible for inspection prior to being covered or enclosed.
   - that protection devices, piping, and fittings shall be protected as far as possible against adverse environmental effects, for example, the danger of water collecting and freezing in relief pipes or the accumulation of dirt and debris;
   - that piping in refrigeration systems shall be so designed and installed to minimize the likelihood of hydraulic shock damaging the system;
   - that steel pipes and components shall be protected against corrosion with a rustproof coating before applying any insulation;
   - that precautions shall be taken to avoid excessive vibration or pulsation;
   - the minimum floor area of the room shall be mentioned in the form of a table or a single figure without reference to a formula;
   - after completion of field piping for split systems, the field pipework shall be pressure tested with an inert gas and then vacuum tested prior to refrigerant charging, according to the following requirements:

   a. The minimum test pressure for the low side of the system shall be the low side design pressure and the minimum test pressure for the high side of the system shall be the high side design pressure, unless the high side of the system cannot be isolated from the low side of the system in which case the entire system shall be pressure tested to the low side design pressure.
   b. The test pressure after removal of pressure source shall be maintained for at least 1 h with no decrease of pressure indicated by the test gauge, with test gauge resolution not exceeding 5% of the test pressure.

c. During the evacuation test, after achieving a vacuum level specified in the manual or less, the refrigeration system shall be isolated from the vacuum pump and the pressure shall not rise above 1500 microns within 10 min. The vacuum pressure level shall be specified in the manual, and shall be the lessor of 500 microns or the value required for compliance with national and local codes and standards, which may vary between residential, commercial, and industrial buildings.

-- field-made refrigerant joints indoors shall be tightness tested according to the following requirements: The test method shall have a sensitivity of 5 grams per year of refrigerant or better under a pressure of at least 0,25 times the maximum allowable pressure. No leak shall be detected.

-- Any servicing shall be performed only as recommended by the manufacturer.

3. Qualification of workers

Any maintenance, service and repair operations must be required qualification of the working personnel. Every working procedure that affects safety means shall only be carried out by competent persons that joined the training and achieved competence should be documented by a certificate. The training of these procedures is carried out by national training organizations or manufacturers that are accredited to teach the relevant national competency standards that may be set in legislation. All training shall follow the ANNEX HH requirements of UL 60335-2-40 4th Edition.

Examples for such working procedures are:

- breaking into the refrigeration circuit;
- opening of sealed components;
- opening of ventilated enclosures.

Information Servicing

1. Checks to the area

Prior to beginning work on systems containing flammable refrigerants, safety checks are necessary to ensure that the risk of ignition is reduced. For repair to the refrigeration system, the following precautions shall be complied with prior to conducting work on the system.

2. Work procedure

Works shall be undertaken under a controlled procedure so as to reduce the risk of a flammable gas or vapour being present while the work is being performed.

3. General work area

All maintenance staff and others working in the local area shall be instructed on the nature of work being carried out. work in confined spaces shall be avoided.

4. Checking for presence of refrigerant

The area shall be checked with an appropriate refrigerant detector prior to and during work, to ensure the technician is aware of potentially flammable atmospheres. Ensure that the leak detection equipment being used is suitable for use with flammable refrigerants, i.e., no sparking, adequately sealed or intrinsically safe.

5. Presence of fire extinguisher

If any hot work is to be conducted on the refrigeration equipment or any associated parts, appropriate fire extinguishing equipment shall be available to hand. Have a dry power or CO_2 fire extinguisher adjacent to the charging area.

6. No ignition sources
No person carrying out work in relation to a REFRIGERATION SYSTEM which involves exposing any pipe work shall use any sources of ignition in such a manner that it may lead to the risk of fire or explosion. All possible ignition sources, including cigarette smoking, should be kept sufficiently far away from the site of installation, repairing, removing and disposal, during which refrigerant can possibly be released to the surrounding space. Prior to work taking place, the area around the equipment is to be surveyed to make sure that there are no flammable hazards or ignition risks. “No Smoking” signs shall be displayed.

7. Ventilated area
Ensure that the area is in the open or that it is adequately ventilated before breaking into the system or conducting any hot work. A degree of ventilation shall continue during the period that the work is carried out. The ventilation should safely disperse any released refrigerant and preferably expel it externally into the atmosphere.

8. Checks to the refrigeration equipment
Where electrical components are being changed, they shall be fit for the purpose and to the correct specification. At all times the manufacturer’s maintenance and service guidelines shall be followed. If in doubt consult the manufacturer’s technical department for assistance. The following checks shall be applied to installations using FLAMMABLE REFRIGERANTS:

- the actual refrigerant charge is in accordance with the room size within which the refrigerant containing parts are installed;
- the ventilation machinery and outlets are operating adequately and are not obstructed;
- if an indirect refrigeration circuit is being used, the secondary circuits shall be checked for the presence of refrigerant;
- marking to the equipment continues to be visible and legible, marking and signs that are illegible shall be corrected;
- refrigeration pipe or components are installed in a position where they are unlikely to be exposed to any substance which may corrode refrigerant containing components, unless the components are constructed of materials which are inherently resistant to being corroded or are suitably protected against being so corroded.

9. Checks to electrical devices
Repair and maintenance to electrical components shall include initial safety checks and component inspection procedures. If a fault exists that could compromise safety, then no electrical supply shall be connected to the circuit until it is satisfactorily dealt with. If the fault cannot be corrected immediately but it is necessary to continue operation, and adequate temporary solution shall be used. This shall be reported to the owner of the equipment so all parties are advised.
Initial safety checks shall include:

- that capacitors are discharged: this shall be done in a safe manner to avoid possibility of sparking;
- that there no live electrical components and wiring are exposed while charging, recovering or purging the system;
- that there is continuity of earth bonding.

10. Sealed electrical components shall be replaced if it's damage

11. Intrinsically safe components must be replaced if it's damage

12. Wiring
Check that cabling will not be subject to wear, corrosion, excessive pressure, vibration, sharp edges or any other adverse environmental effects. The check shall also take into account the effects of aging or continual vibration from sources such as compressors or fans.

13. Detection of flammable refrigerants
Under no circumstances shall potential sources of ignition be used in the searching for or detection of refrigerant leaks. A halide torch (or any other detector using a naked flame) shall not be used.
The following leak detection methods are deemed acceptable for refrigerant systems. Electronic leak detectors may be used to detect refrigerant leaks but, in the case of FLAMMABLE REFRIGERANTS, the sensitivity may not be adequate, or may need re-calibration. (Detection equipment shall be calibrated in a refrigerant-free area.) Ensure that the detector is not a potential source of ignition and is suitable for the refrigerant used. Leak detection equipment shall be set at a percentage of the LFL of the refrigerant and shall be calibrated to the refrigerant employed, and the appropriate percentage of gas (25 % maximum) is confirmed.
Leak detection fluids are also suitable for use with most refrigerants but the use of detergents containing chlorine shall be avoided as the chlorine may react with the refrigerant and corrode the copper pipe-work.
NOTE Examples of leak detection fluids are
- bubble method,
- fluorescent method agents.

If a leak is suspected, all naked flames shall be removed/extinguished.
If a leakage of refrigerant is found which requires brazing, all of the refrigerant shall be recovered from the system, or isolated (by means of shut off valves) in a part of the system remote from the leak. See the following instructions of removal of refrigerant.

14. Removal and evacuation
When breaking into the refrigerant circuit to make repairs - or for any other purpose conventional procedures shall be used. However, for flammable refrigerants it is important that best practice be followed, since flammability is a consideration.
The following procedure shall be adhered to:
- safely remove refrigerant following local and national regulations;
- evacuate;
- purge the circuit with inert gas (optional for A2L);
- evacuate (optional for A2L);
- continuously flush or purge with inert gas when using flame to open circuit; and
- open the circuit.

The refrigerant charge shall be recovered into the correct recovery cylinders if venting is not allowed by local and national codes. For appliances containing flammable refrigerants, the system shall be purged with oxygen-free nitrogen to render the appliance safe for flammable refrigerants. This process might need to be repeated several times. Compressed air or oxygen shall not be used for purging refrigerant systems.
For appliances containing flammable refrigerants, refrigerants purging shall be achieved by breaking the vacuum in the system with oxygen-free nitrogen and continuing to fill until the working pressure is achieved, then venting to atmosphere, and finally pulling down to a vacuum (optional for A2L). This process shall be repeated until no refrigerant is within the system (optional for A2L). When the final oxygen-free nitrogen charge is used, the system shall be vented down to atmospheric pressure to enable work to take place.
The outlet for the vacuum pump shall not be close to any potential ignition sources, and ventilation shall be available.

15. Charging procedures

In addition to conventional charging procedures, the following requirements shall be followed:

- Works shall be undertaken with appropriate tools only (In case of uncertainty, please consult the manufacturer of the tools for use with flammable refrigerants)
- Ensure that contamination of different refrigerants does not occur when using charging equipment. Hoses or lines shall be as short as possible to minimize the amount of refrigerant contained in them.
- Cylinders shall be kept upright.
- Ensure that the refrigeration system is earthed prior to charging the system with refrigerant.
- Label the system when charging is complete (if not already).
- Extreme care shall be taken not to overfill the refrigeration system.
- Prior to recharging the system it shall be pressure tested with oxygen free nitrogen (OFN). The system shall be leak tested on completion of charging but prior to commissioning. A follow up leak test shall be carried out prior to leaving the site.

16. Decommissioning

Before carrying out this procedure, it is essential that the technician is completely familiar with the equipment and all its detail. It is recommended good practice that all refrigerants are recovered safely. Prior to the task being carried out, an oil and refrigerant sample shall be taken in case analysis is required prior to re-use of recovered refrigerant. It is essential that electrical power is available before the task is commenced.

a) Become familiar with the equipment and its operation.
b) Isolate system electrically
c) Before attempting the procedure ensure that:

- mechanical handling equipment is available, if required, for handling refrigerant cylinders;
- all personal protective equipment is available and being used correctly;
- the recovery process is supervised at all times by a competent person;
- recovery equipment and cylinders conform to the appropriate standards.

d) Pump down refrigerant system, if possible.
e) If a vacuum is not possible, make a manifold so that refrigerant can be removed from various parts of the system.
f) Make sure that cylinder is situated on the scales before recovery takes place.
g) Start the recovery machine and operate in accordance with instructions.
h) Do not overfill cylinders (no more than 80 % volume liquid charge)
i) Do not exceed the maximum working pressure of the cylinder, even temporarily.
j) When the cylinders have been filled correctly and the process completed, make sure that the cylinders and the equipment are removed from site promptly and all isolation valves on the equipment are closed off.
k) Recovered refrigerant shall not be charged into another refrigeration system unless it has been cleaned and checked.

17. Labelling

Equipment shall be labelled stating that it has been de-commissioned and emptied of refrigerant. The label shall be dated and signed. For appliances containing FLAMMABLE REFRIGERANTS, ensure that there are labels on the equipment stating the equipment contains FLAMMABLE REFRIGERANT.

18. Recovery

When removing refrigerant from a system, either for servicing or decommissioning, it is recommended good practice that all refrigerants are removed safely.
When transferring refrigerant into cylinders, ensure that only appropriate refrigerant recovery cylinders are employed. Ensure that the correct number of cylinders for holding the total system charge is available. All cylinders to be used are designated

for the recovered refrigerant and labelled for that refrigerant (i. e. special cylinders for the recovery of refrigerant). Cylinders shall be complete with pressure-relief valve and associated shut-off valves in good working order. Empty recovery cylinders are evacuated and, if possible, cooled before recovery occurs.
The recovery equipment shall be in good working order with a set of instructions concerning the equipment that is at hand and shall be suitable for the recovery of the flammable refrigerant. If in doubt, the manufacturer should be consulted. In addition, a set of calibrated weighing scales shall be available and in good working order. Hoses shall be complete with leak-free disconnect couplings and in good condition.
The recovered refrigerant shall be processed according to local legislation in the correct recovery cylinder, and the relevant waste transfer note arranged. Do not mix refrigerants in recovery units and especially not in cylinders.
If compressors or compressor oils are to be removed, ensure that they have been evacuated to an acceptable level to make certain that flammable refrigerant does not remain within the lubricant. The compressor body shall not be heated by an open flame or other ignition sources to accelerate this process. When oil is drained from a system, it shall be carried out safely.

19. Unventilated areas

- An unventilated area where the appliance using FLAMMABLE REFRIGERANTS is installed shall be so constructed that should any refrigerant leak, it will not stagnate so as to create a fire or explosion hazard.
- If appliances connected via an air duct system to one or more rooms with A2L REFRIGERANTS are installed in a room with an area less than Amin, that room shall be without continuously operating open flames (e.g. an operating gas appliance) or other POTENTIAL IGNITION SOURCES (for e.g. an operating electric heater, hot surfaces). A flame-producing device may be installed in the same space if the device is provided with an effective flame arrest.
- Auxiliary devices which may be a POTENTIAL IGNITION SOURCE shall not be installed in the duct work. Examples of such POTENTIAL IGNITION SOURCES are hot surfaces with a temperature exceeding 700 °C and electric switching devices.
- Only auxiliary devices (such as certificated heater kit) approved by the appliance manufacturer or declared suitable with the refrigerant shall be installed in connecting ductwork.
- For duct connected appliances, false ceilings or drop ceilings may be used as a return air plenum if a REFRIGERANT DETECTION SYSTEM is provided in the appliance and any external connections are also provided with a sensor immediately below the return air plenum duct joint.
- REFRIGERANT SENSORS for REFRIGERANT DETECTION SYSTEMS Shall Only be replaced with sensors specified by the certified technician.
- LEAK DETECTION SYSTEM installed. Unit must be powered except for service.

20. Transportation, marking and storage for units

1. Transport of equipment containing flammable refrigerants
   Compliance with the transport regulations
2. Marking of equipment using signs
   Compliance with local regulations
3. Disposal of equipment using flammable refrigerants
   Compliance with national regulations
4. Storage of equipment/appliances
   The storage of equipment should be in accordance with the manufacturer's instructions.

5. Storage of packed (unsold) equipment
   Storage package protection should be constructed such that mechanical damage to the equipment inside the package will not cause a leak of the refrigerant charge.
   The maximum number of pieces of equipment permitted to be stored together will be determined by local regulations.

Explanation of symbols displayed on the indoor unit or outdoor unit

A2L	**WARNING**	This symbol shows that this appliance used a flammable refrigerant. If the refrigerant is leaked and exposed to an external ignition source, there is a risk of fire.
	CAUTION	This symbol shows that the operation manual should be read carefully.
	CAUTION	This symbol shows that a service personnel should be handling this equipment with reference to the installation manual.
	CAUTION	
	CAUTION	This symbol shows that information is available such as the operating manual or installation manual.

INDOOR UNIT PARTS AND MAJOR FUNCTIONS

1. UNIT PARTS

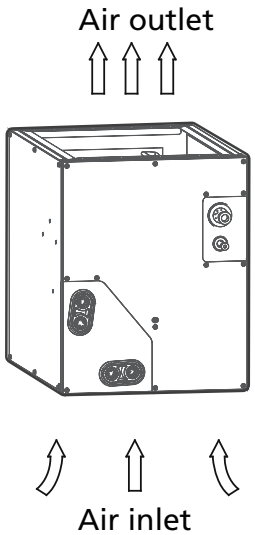

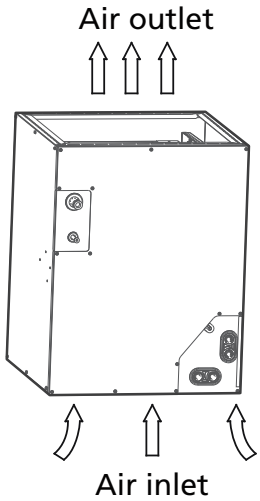

2. OPERATING CONDITIONS

Use the system under the following temperatures for safe and effective operation. If the air conditioner is used under different conditions, it may malfunction or become less efficient.

INVERTER SPLIT TYPE

	COOL mode	HEAT mode	DRY mode
Room Temperature	16°C - 32°C (60°F - 90°F)	0°C - 30°C (32°F - 86°F)	10°C - 32°C (50°F - 90°F)
Recommend Outdoor Temperature	-30°C - 50°C (-22°F - 122°F) (For Hyper Heat Series)	-30°C - 24°C (-22°F - 75°F) (For Hyper Heat Series)	0°C - 50°C (32°F - 122°F)
	-25°C - 50°C (-13°F - 122°F) (For Regular Heat Series)	-25°C - 24°C (-13°F - 75°F) (For Regular Heat Series)	

FOR OUTDOOR UNITS WITH AUXILIARY ELECTRIC HEATER

When outside temperature is below 0°C(32°F), we strongly recommend keeping the outdoor unit powered at all times to prevent damage to equipment.

NOTICE

Room relative humidity less than 80%. If the air conditioner operates in excess of this figure, the surface of the air conditioner may attract condensation. When the gas furnace enters heating mode, the air conditioner in a closed state for a long time.

TO FURTHER OPTIMIZE THE PERFORMANCE OF YOUR UNIT, DO THE FOLLOWING:

- Keep doors and windows closed.
- Limit energy usage by using TIMER ON and TIMER OFF functions.
- Do not block air inlets or outlets.
- Regularly inspect and clean air filters.

3. FEATURES

Refrigerant Leak Detection System

In the event of a refrigerant leak, the LCD screen will display “EL0C” or “EHC1” or “EHC2” and the LED indicator light will flash. The default temperature of the first power-on is set to 60 °F for refrigeration and 86 °F for heating. When the temperature stops, the temperature is set at the room temperature at that time.

NOTICE

- Under normal working conditions, the switch, wind speed and temperature cannot be adjusted by remote control.
- Requirements of wire controller: Control AUX function for live heating.

4. ENERGY SAVING TIPS

- **DO NOT** set the unit to excessive temperature levels.
- While cooling, close the curtains to avoid direct sunlight.
- Doors and windows should be kept closed to keep cool or warm air in the room.
- **DO NOT** place objects near the air inlet and outlet of the unit.
- Replace the air filter every 30 to 90 days depending on thickness and MERV.

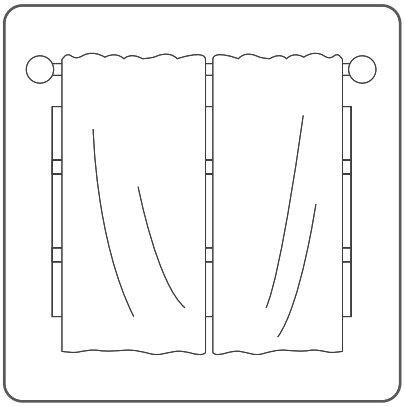

Closing curtains during heating also helps keep the heat in

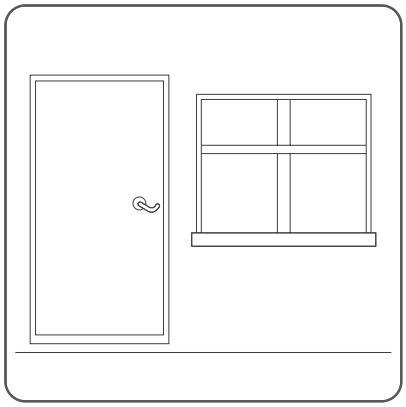

Doors and windows should be kept closed

CARE AND MAINTENANCE

To continue high performance and minimize possible equipment failure, it is essential that periodic maintenance be performed on this equipment. Consult your local dealer as to the proper frequency of maintenance, but it should be done at least annually. The ability to properly perform maintenance on this equipment requires certain mechanical skills and tools. If you do not possess these, contact your dealer for maintenance. The only consumer service recommended or required is filter replacement or cleaning on a monthly basis.

CLEANING YOUR INDOOR UNIT

⚠ BEFORE CLEANING OR MAINTENANCE

Always turn off your air conditioner system and disconnect its power supply before cleaning or maintenance.

- Contact an authorized service technician for repair or maintenance. Improper repair and maintenance may cause water leakage, electrical shock, or fire, and may void your warranty.
- **Do not** substitute a blown fuse with a higher or lower amperage rating fuse, as this may cause circuit damage or an electrical fire. Replacement Fuse must be identical to one removed.
- Make sure the drain hose is set up according to the instructions. Failure to do so could cause leakage and result in personal property damage, fire and electric shock.
- Make sure that all wires are connected properly. Failure to connect wires according to instructions can result in electrical shock or fire.

⚠ CAUTION FOR ALL PIPES INSTALLATION

Only use a soft, dry cloth to wipe the unit clean. If the unit is especially dirty, you can use a cloth soaked in warm water to wipe it clean.

- **Do not** use chemicals or chemically treated cloths to clean the unit.
- **Do not** use benzene, paint thinner, polishing powder or other solvents to clean the unit. They can cause the plastic surface to crack or deform. Use of volatile cleaners may cause fire, resulting in injury or death.
- **Do not** use water hotter than 40°C (104°F) to clean the front panel. This can cause the panel to deform or become discolored.
- **Do not** wash the unit under running water. Doing so creates an electrical hazard.
- Clean the unit using a damp, lint-free cloth and neutral detergent. Dry the unit with a dry, lint-free cloth.

NOTICE

Inspect and clean or replace air filter each month or as required.
Failure to follow this caution may result in environmental damage. Remove and recycle all components or materials (i.e., oil, refrigerant, etc.) before unit final disposal.

⚠ CAUTION

- Before changing the filter or cleaning, turn off the unit and disconnect its power supply.
- When removing filter, do not touch metal parts in the unit. The sharp metal edges can cut you.
- Do not use water to clean the inside of the indoor unit. This can destroy insulation and cause electrical shock.
- Do not expose filter to direct sunlight when drying. This can shrink the filter.
- Any maintenance and cleaning of outdoor unit should be performed by an authorized dealer or a licensed service provider.
- Any unit repairs should be performed by an authorized dealer or a licensed service provider.

Maintenance your AC.

Maintenance – Long Periods of Non-Use

If you plan not to use your air conditioner for an extended period of time, do the following:

Turn on FAN function until unit dries out completely

Maintenance – Pre-Season Inspection

After long periods of non-use, or before periods of frequent use, do the following:

Check for damaged wires

Check for leaks

Make sure nothing is blocking all air inlets and outlets

TROUBLESHOOTING

⚠ SAFETY PRECAUTIONS

If any of the following conditions occurs, turn off your unit immediately!

- You smell a burning odor.
- The unit emits loud or abnormal sounds.
- A power fuse blows or the circuit breaker frequently trips.
- Water or other objects fall into or out of the unit.

DO NOT ATTEMPT TO FIX THESE YOURSELF! CONTACT AN AUTHORIZED SERVICE PROVIDER IMMEDIATELY!

Common Issues

The following problems are not a malfunction and in most situations will not require repairs.

Issue	Possible Causes
Unit does not turn on when pressing ON/OFF button	The Unit has a 3-minute protection feature that prevents the unit from overloading. The unit cannot be restarted within three minutes of being turned off.
	Cooling and Heating Models: If the Operation light and PRE-DEF (Pre-heating/ Defrost) indicators are lit up, the outdoor temperature is too cold and the unit's anti-cold wind is activated in order to defrost the unit.
	In Cooling-only Models: If the "Fan Only" indicator is lit up, the outdoor temperature is too cold and the unit's anti-freeze protection is activated in order to defrost the unit.
The unit changes from COOL/HEAT mode to FAN mode	The unit may change its setting to prevent frost from forming on the unit. Once the temperature increases, the unit will start operating in the previously selected mode again.
	The set temperature has been reached, at which point the unit turns off the compressor. The unit will continue operating when the temperature fluctuates again.
The indoor unit emits white mist	In humid regions, a large temperature difference between the room's air and the conditioned air can cause white mist.
Both the indoor and outdoor units emit white mist	When the unit restarts in HEAT mode after defrosting, white mist may be emitted due to moisture generated from the defrosting process.
The indoor unit makes noises	A squeaking sound is heard when the system is OFF or in COOL mode. The noise is also heard when the drain pump (optional) is in operation.
	A squeaking sound may occur after running the unit in HEAT mode due to expansion and contraction of the unit's plastic parts.
Both the indoor unit and outdoor unit make noises	Low hissing sound during operation: This is normal and is caused by refrigerant gas flowing through both indoor and outdoor units.
	Low hissing sound when the system starts, has just stopped running, or is defrosting: This noise is normal and is caused by the refrigerant gas stopping or changing direction.
	Squeaking sound: Normal expansion and contraction of plastic and metal parts caused by temperature changes during operation can cause squeaking noises.

Issue	Possible Causes
The outdoor unit makes noises	The unit will make different sounds based on its current operating mode.
Dust is emitted from either the indoor or outdoor unit	The unit may accumulate dust during extended periods of non-use, which will be emitted when the unit is turned on. This can be mitigated by covering the unit during long periods of inactivity.
The unit emits a bad odor	The unit may absorb odors from the environment (such as furniture, cooking, cigarettes, etc.) which will be emitted during operations.
	The unit's filters have become moldy and should be cleaned.
The fan of the outdoor unit does not operate	During operation, the fan speed is controlled to optimize product operation.

NOTICE

If problem persists, contact a local dealer. Provide them with a detailed description of the unit malfunction as well as your model number.

TROUBLESHOOTING

When troubles occur, please check the following points before contacting a repair company.

Problem	Possible Causes	Solution
Poor Cooling Performance	Temperature setting may be higher than ambient room temperature	Lower the temperature setting
	The heat exchanger on the indoor or outdoor unit is dirty	Clean the affected heat exchanger
	The air filter is dirty	Remove the filter and clean it according to instructions
	The air inlet or outlet of either unit is blocked	Turn the unit off, remove the obstruction and turn it back on
	Doors and windows are open	Make sure that all doors and windows are closed while operating the unit
	Excessive heat is generated by sunlight	Close windows and curtains during periods of high heat or bright sunshine
	Too many sources of heat in the room (people, computers, electronics, etc.)	Reduce amount of heat sources
	Low refrigerant due to leak or long-term use	Check for leaks, re-seal if necessary and top off refrigerant

Problem	Possible Causes	Solution
The unit is not working	Power failure	Wait for the power to be restored
	The power is turned off	Turn on the power
	The fuse is burned out	Replace the fuse
	The Unit's 3-minute protection has been activated	Wait three minutes after restarting the unit
	Timer is activated	Turn timer off
The unit starts and stops frequently	There's too much or too little refrigerant in the system	Check for leaks and recharge the system with refrigerant.
	Incompressible gas or moisture has entered the system.	Evacuate and recharge the system with refrigerant
	System circuit is blocked	Determine which circuit is blocked and replace the malfunctioning piece of equipment
	The compressor is broken	Replace the compressor
	The voltage is too high or too low	Install a manostat to regulate the voltage
Poor heating performance	The outdoor temperature is extremely low	Use auxiliary heating device
	Cold air is entering through doors and windows	Make sure that all doors and windows are closed during use
	Low refrigerant due to leak or long-term use	Check for leaks, re-seal if necessary and top off refrigerant

ACCESSORIES

The air conditioning system comes with the following accessories. Use all of the installation parts and accessories to install the air conditioner. Improper installation may result in water leakage, electrical shock and fire, or equipment failure.

ACCESSORIES (PACKED WITH THE INDOOR UNIT)

No	Name	Picture	Quantity	Remark
1	Manual		1	
2	A-COIL Mini Interface		1	With separate package (Part on top of foam)
3	Wired controller		1	With separate package
4	Screws		3	M4*25 (For mounting on the wall), in the control box package
5	Screws		3	M4*16, in the control box package
6	Anchors		3	(For mounting on the wall), in the control box package
7	Room Temp. Sensor (T1)		1	(For mounting on the wall), in the control box package
8	Room Temp. Sensor (T1) (5m)		1	(For mounting on the wall), in the control box package
9	Ferrite Clamp		1	(For mounting on the wall), in the control box package
10	Cable ties		1	(For mounting on the wall), in the control box package

NOTICE

The wired system control functions as an IR receiver for the handheld remote, if the remote is not used it must be retained with the indoor unit to adjust parameters, and for troubleshooting.

INDOOR UNIT INSTALLATION

⚠ CAUTION

Install the indoor and outdoor units, cables and wires at least 3-1/5ft (1m) from televisions or radios to prevent static or image distortion. Depending on the appliances, a 3-1/5ft (1m) distance may not be sufficient.

The Indoor unit must be electrically grounded per national and local electrical code.

SELECT THE INSTALLATION LOCATION OF INDOOR UNITS

WARNING
DO NOT LOCATIONS:

DO NOT install the indoor unit in a moist environment. Excessive moisture can corrode the equipment, electrical components, and cause electrical shorts.

Areas with strong electromagnetic waves.

Coastal areas with high salt content in the air.

Areas with oil drilling or fracking.

Areas that store flammable materials or gas.

Areas where there may be detergent or other corrosive gases in the air, such as bathrooms, or laundry rooms.

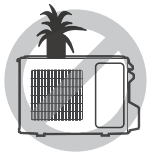

Areas where the air inlet and outlet may be obstructed.

Danger of explosion. Keep flammable materials and vapors, such as gasoline, away from air handler.

WARNING
MUST BE INSTALLED IN A LOCATION
THAT MEETS THE FOLLOWING REQUIREMENTS:

☑ Securely install the indoor unit on a structure that can support its weight. If the structure is too weak, the unit may fall and cause personal injury, unit and property damage, or death.

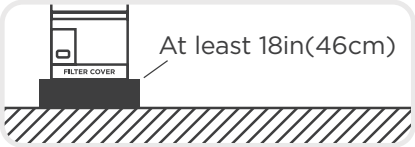

☑ Place air handler so that heating elements are at least 18 inches (46 cm) above the floor for a garage installation. Failure to follow these instructions can result in death, explosion, or fire.

☑ Enough room for installation and maintenance.

☑ Enough room for the connecting pipe and drainpipe.

☑ The structure that the equipment is suspended from must support the weight of the indoor unit.

⚠ WARNING

There must be an airtight seal between the bottom of the air handler and the return air plenum. Use fiberglass sealing strips, foil duct tape, caulking, or equivalent sealing method between the plenum and the air handler cabinet to ensure a tight seal. Return air must not be drawn from a room where this air handler or any gas-fueled appliance (i.e., water heater), or carbon monoxide-producing device (i.e., wood fireplace) is installed.

1. SYSTEM INTRODUCTION

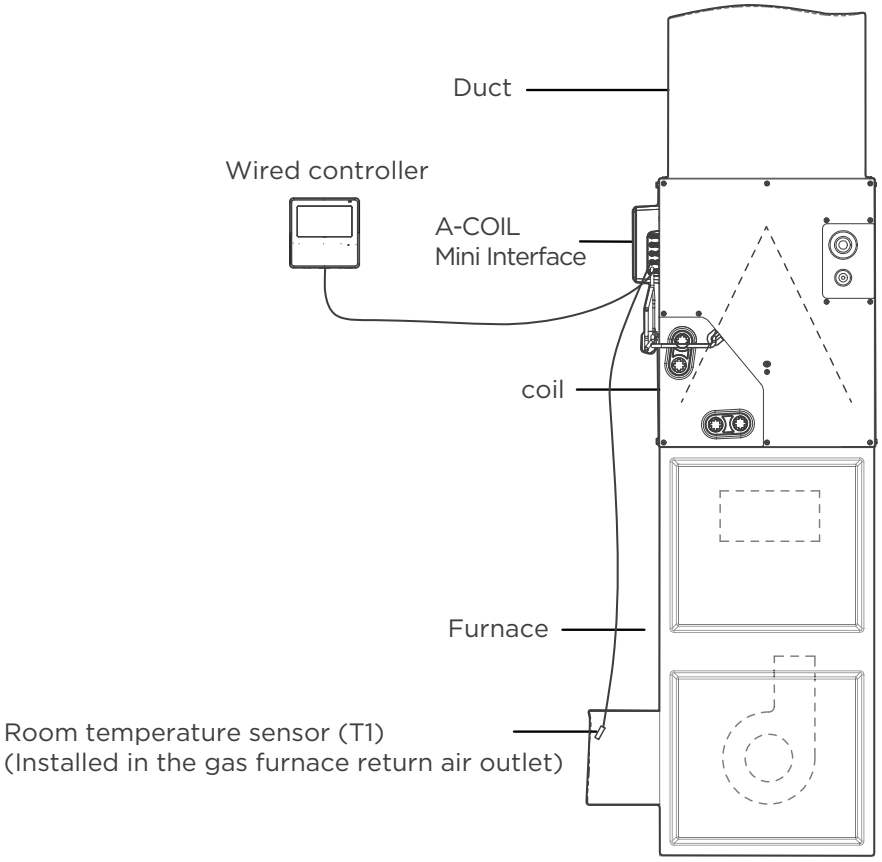

Understanding installation airflow limitations

Install the coil in accordance with all national and local safety codes and the following airflow limits:

Coil Airflow Limits:

Model	outdoor unit(ton)	Minimum(CFM)	Maximum(CFM)
CS-HM24BAAU1	1 1/2	525	600
CS-HM24BAAU1	2	700	800
CS-HM24BAAU2	1 1/2	525	600
CS-HM24BAAU2	2	700	800
CS-HM36BAAU1	2 1/2	875	1000
CS-HM36BAAU1	3	1050	1200
CS-HM36BAAU2	2 1/2	875	1000
CS-HM36BAAU2	3	1050	1200
CS-HM36BAAU3	2 1/2	875	1000
CS-HM36BAAU3	3	1050	1200
CS-HM60BAMU3	4	1400	1600
CS-HM60BAMU3	5	1575	1800
CS-HM60BAAU4	4	1400	1600
CS-HM60BAAU4	5	1575	1800

2. UNIT DIMENSIONS

Unit: in(mm)

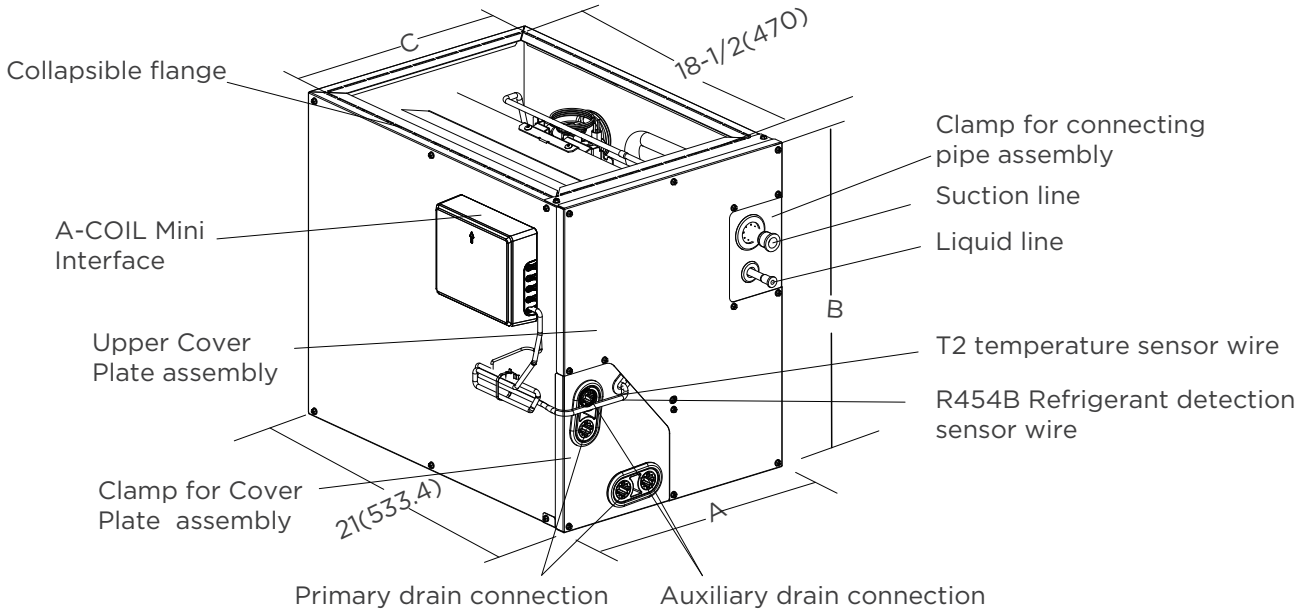

Model	CS-HM24BAAU1		CS-HM36BAAU1		CS-HM24BAAU2	
Dimensions	inch	mm	inch	mm	inch	mm
A	14-1/2	368	14-1/2	368	17-1/2	445
B	18	457	23-5/16	592	18	457
C	13-1/4	336	13-1/4	336	16-3/16	411
Model	**CS-HM36BAAU2**		**CS-HM36BAAU3**		**CS-HM60BAAU4**	
Dimensions	inch	mm	inch	mm	inch	mm
A	17-1/2	445	21	534	24-1/2	622
B	23-1/2	599	24	611	28	711
C	16-3/16	411	19-3/4	502	23-1/4	591

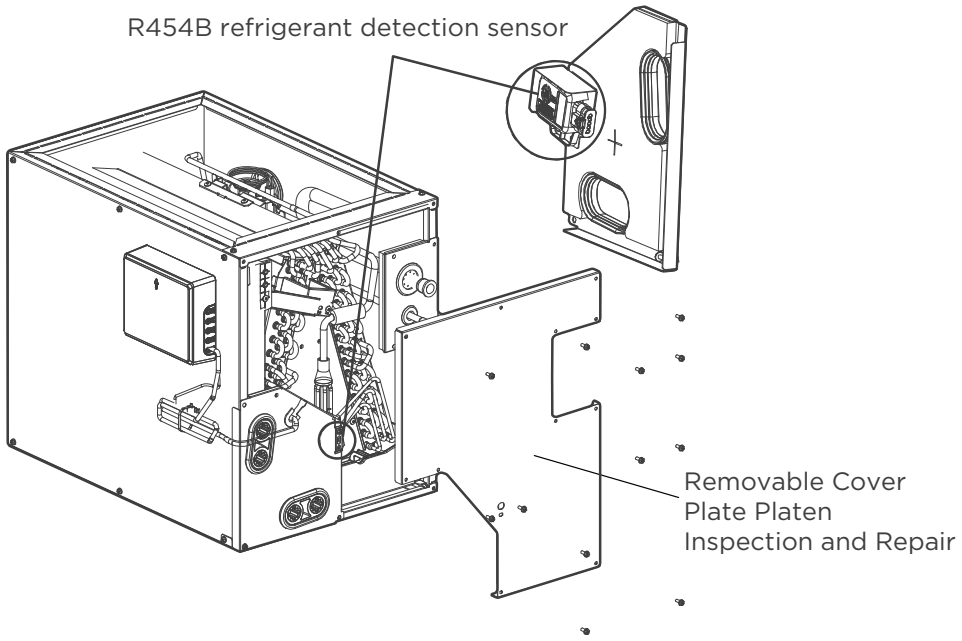

CASED DIMENSIONS AND COMPONENT LOCATION

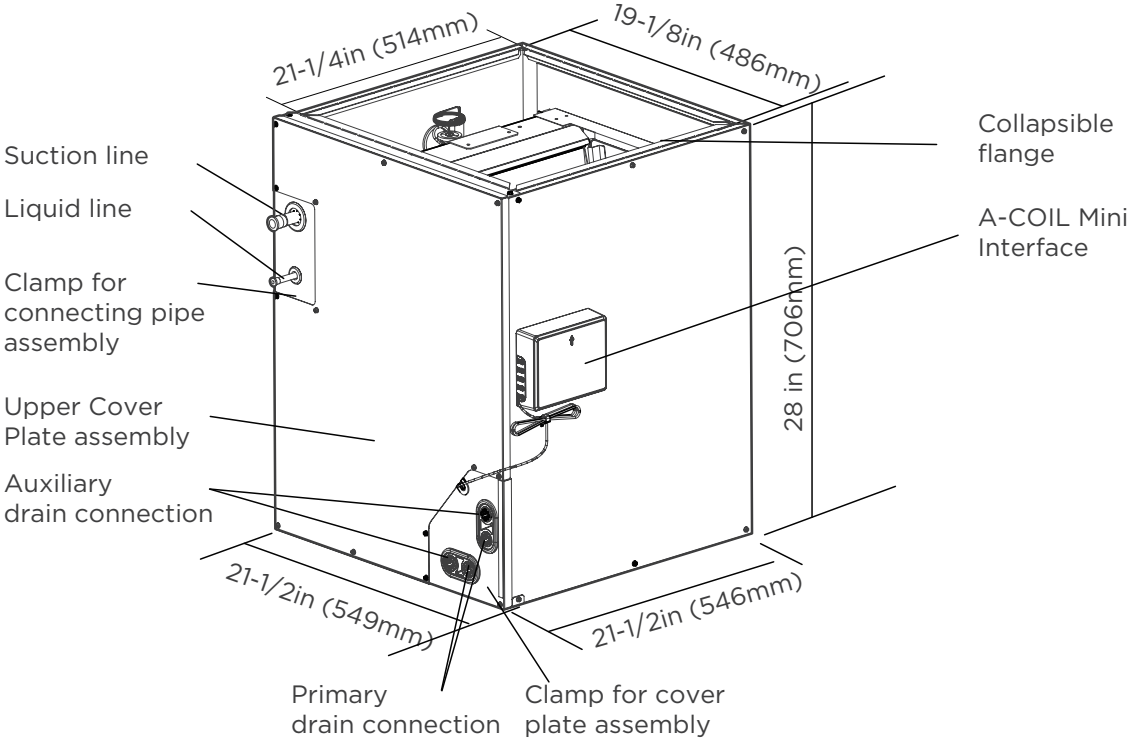

Model	CS-HM60BAMU3

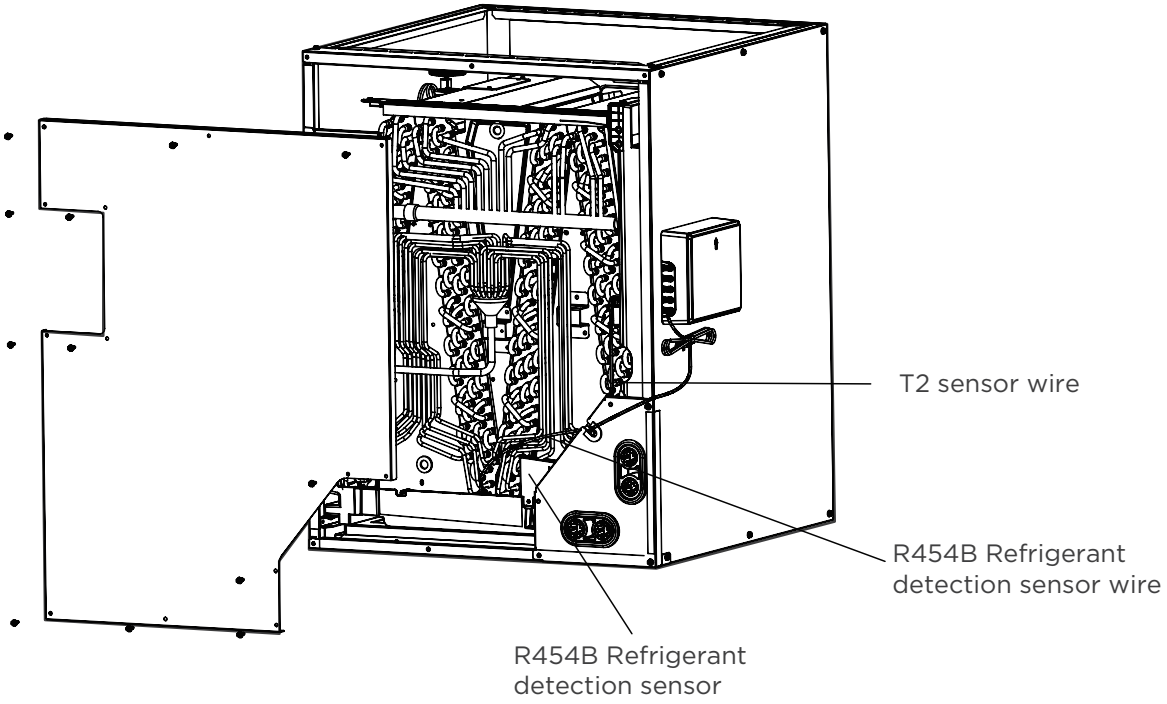

CASED DIMENSIONS AND COMPONENT LOCATION

3. CODES & REGULATIONS

This product is designed and manufactured to comply with national codes.

Installation in accordance with such codes and/or prevailing local codes/regulations is the responsibility of the installer. The manufacturer assumes no responsibility for equipment installed in violation of any codes or regulations.

The United States Environmental Protection Agency (EPA) has issued various regulations regarding the introduction and disposal of refrigerants. Failure to follow these regulations may harm the environment and can lead to the imposition of substantial fines. Should you have any questions please contact the local office of the EPA.

4. INSPECTION UPON UNIT ARRIVAL

As soon as unit is received, it should be inspected and noted for possible shipping damage during transportation. It is carrier's responsibility to cover the cost of shipping damage. Manufacturer or distributor will not accept a claim from contractors for any transportation damage.

5. CLEARANCES

Following clearances should be provided during installation
a. Maintenance and service access, including coil cleaning and coil assembly removal
b. Refrigerant piping and connections
c. Condensate drain line

Ensure the proper installation, Select a solid and level site.
Ensure enough space required for installation and maintenance

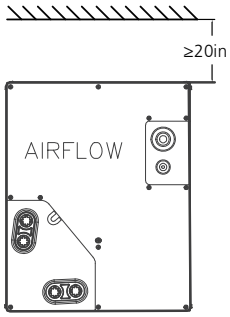

Front view of the indoor unit clearance (including air duct)

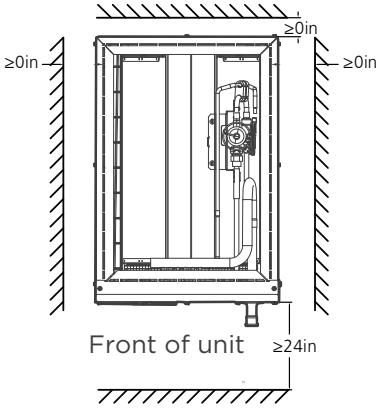

Top View of the indoor unit clearance (including air duct)

6. INSTALLATION AND TRAP CONNECTION

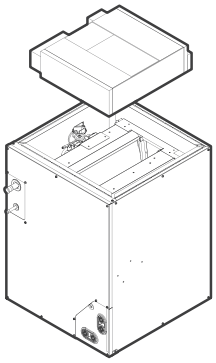

Take out the packing before installation (For some models)

1. Coil installation and drain connection.
2. Installation steps for cased coil:

A. Shut off or disconnect gas furnace's power and remove gas pipe if necessary.
B. Disconnect and remove a sufficient portion of the supply ductwork to provide clearance for the cased coil.
C. Ensure that the coil is leveled well and seal the gap between coil and furnace. In case that coil and furnace sizes are not matched, use proper size of sheet metal or other material to fill the gap and seal the gap to prevent air leak.
D. Reconnect the ductwork to the coil case, and seal any leakage.
E. Reconnect Power line on gas furnace, turn on the furnace to check any sign of leakage

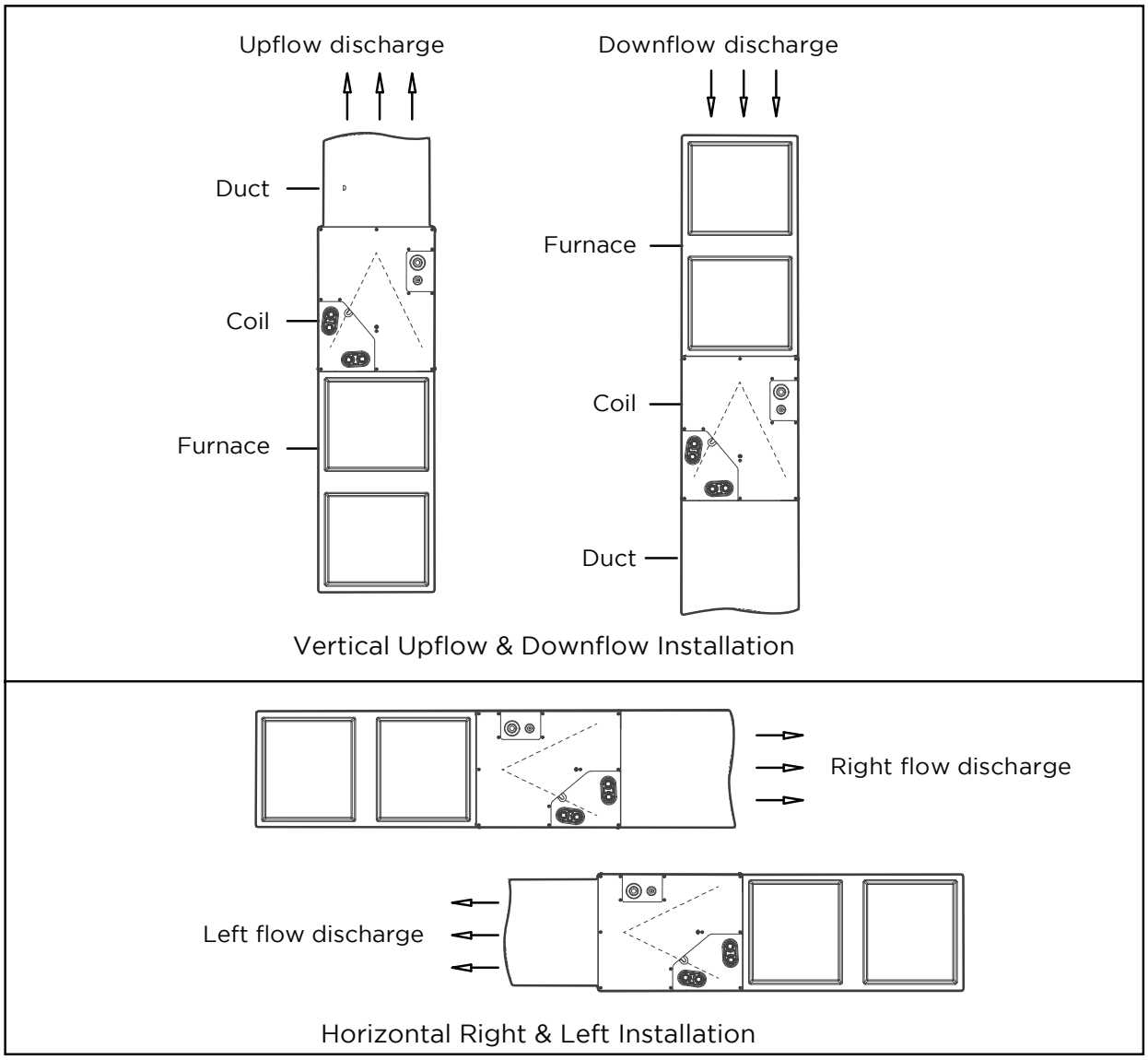

Installation type 1: **Typical coil installation on furnace**

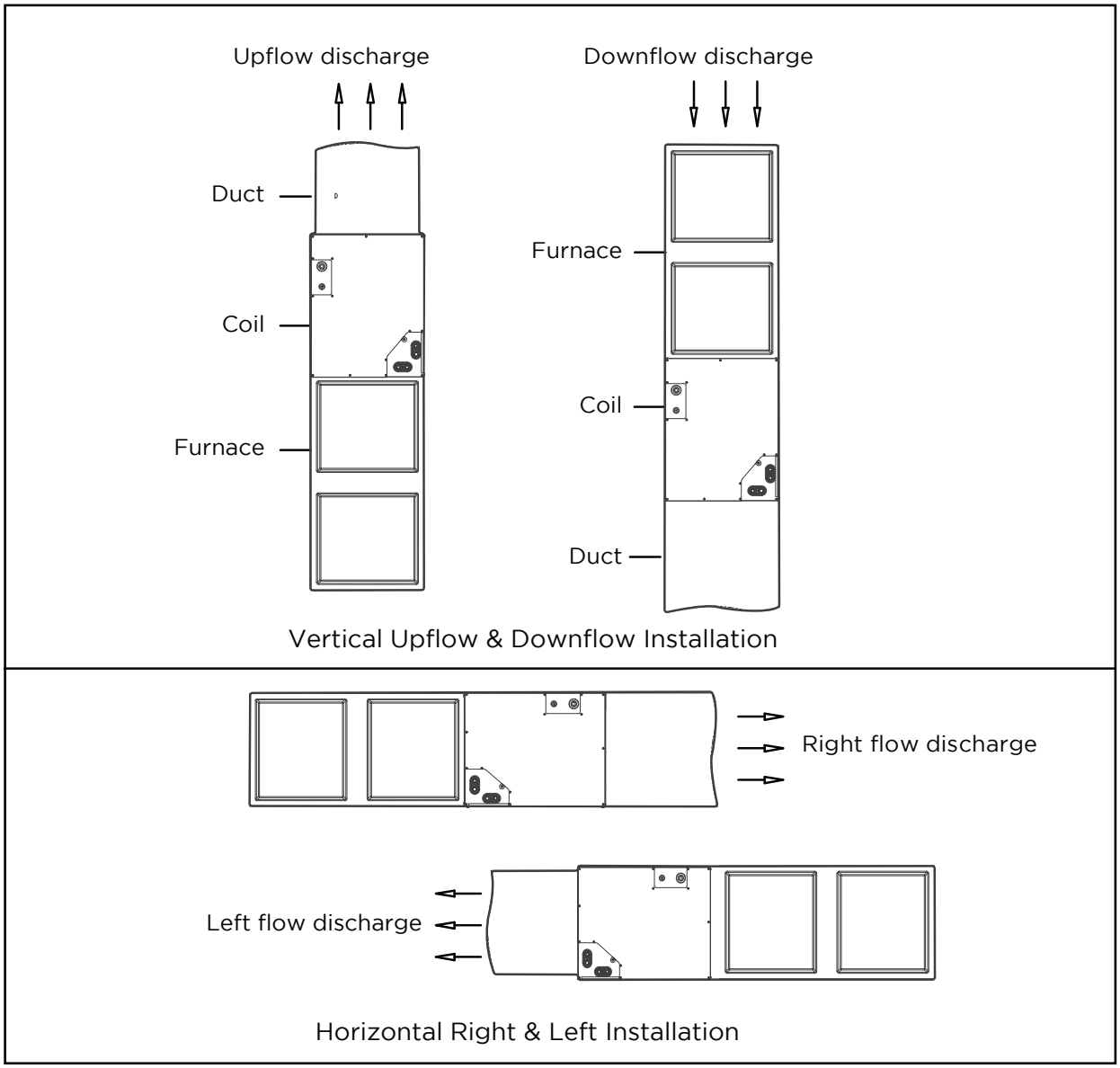

Installation type 2: **Model MVBM-60C28T6N10 coil installation on furnace**

7. INSTALLATION

7.1 INSTALLATION OF EVAPORATOR COILS

Upflow coil installation

The cased coil is designed to fit furnaces of the same width.

1. Set coil in place on upflow furnace discharge air opening.
2. Ensure coil is level for proper condensate drainage. Do not tip coil toward condensate drain. Coil casing need not be fastened or screwed to furnace.
3. When installing wider coil on narrow furnace, create field fabricated adapter.

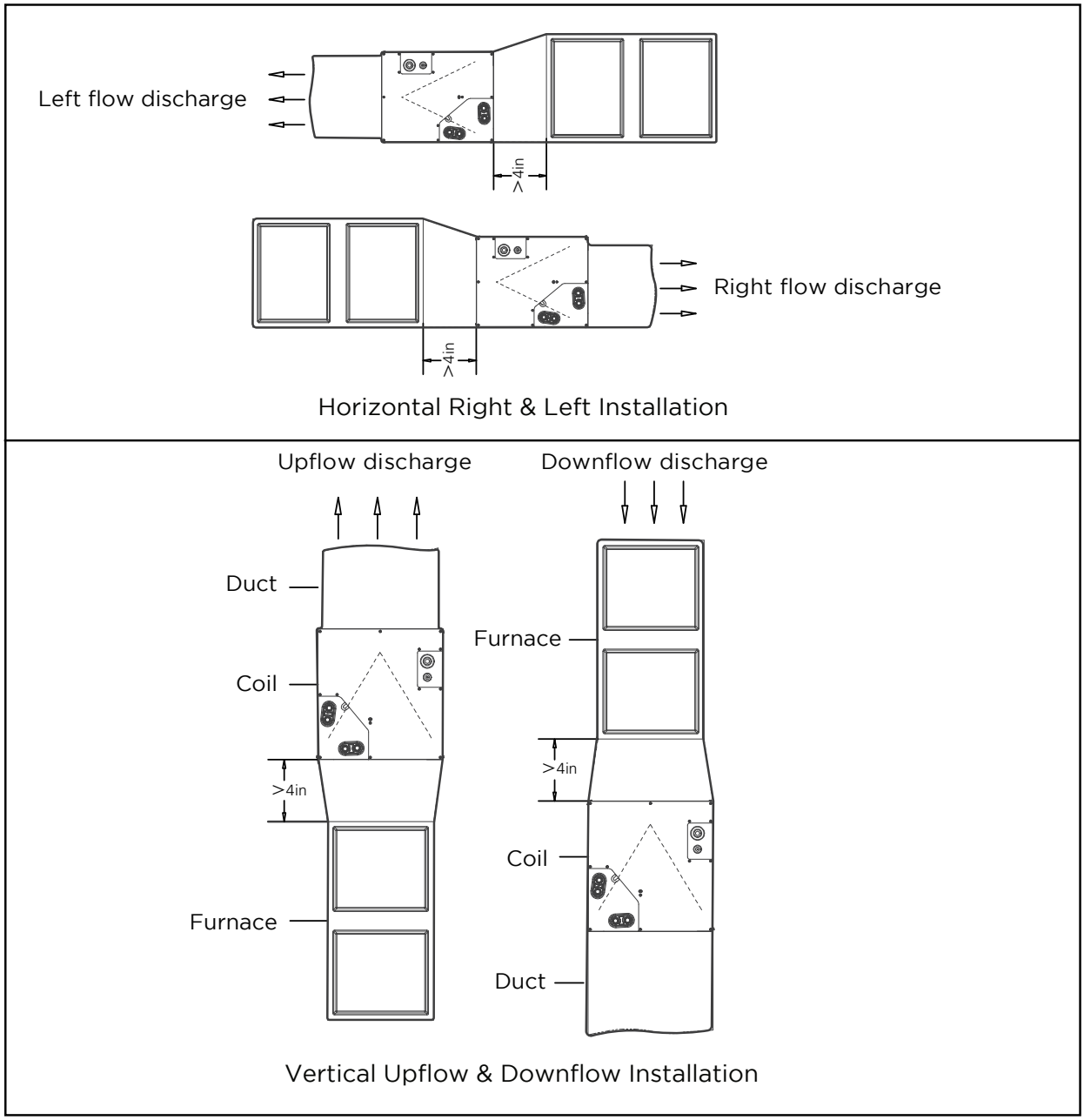

Installation type 3: **Adapter(s) installation when coil overhangs furnace**

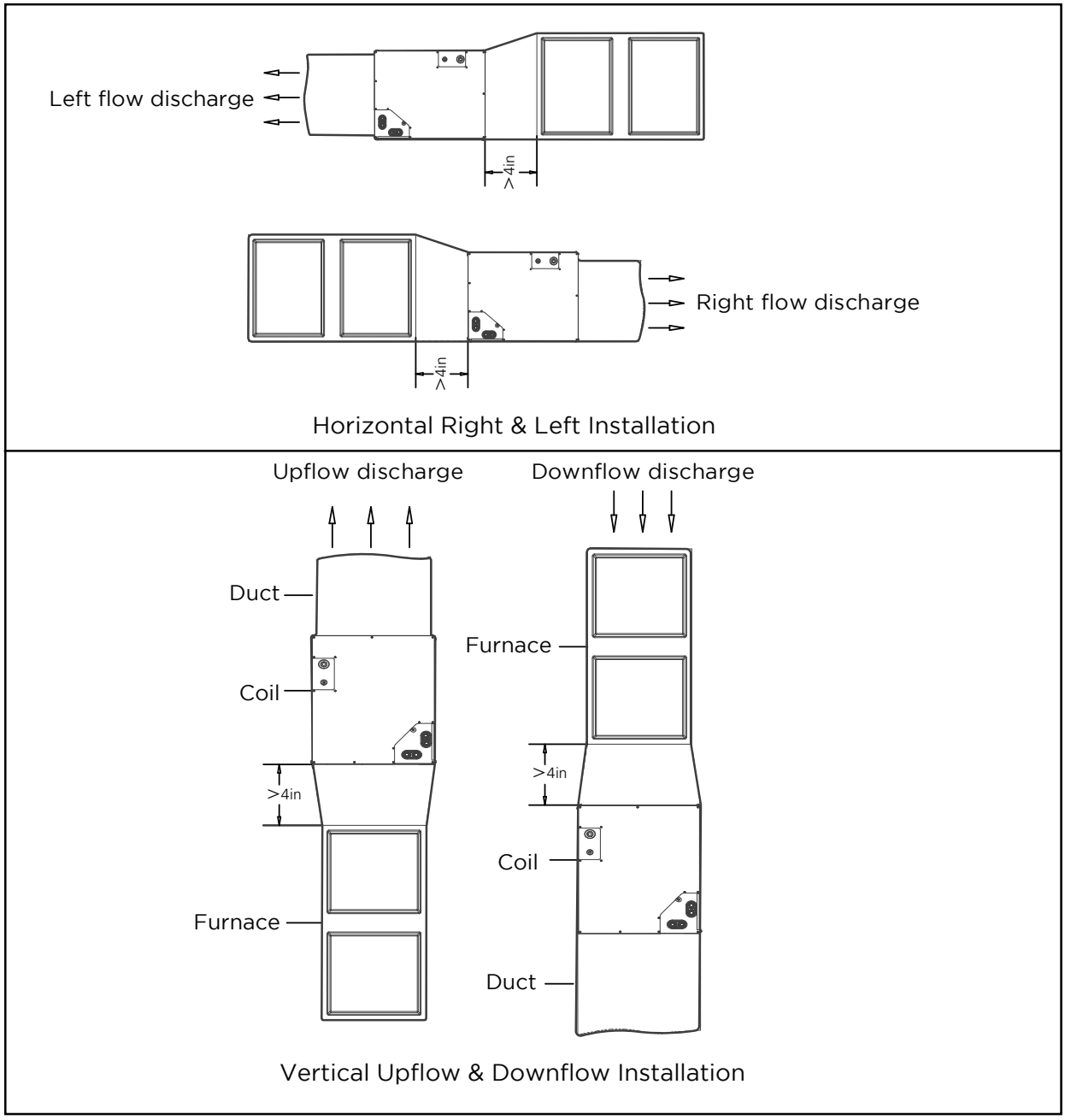

Installation type 4:
Adapter(s) installation when Model MVBM-60C28T6N10 coil overhangs furnace

NOTE: On upflow installations where the indoor coil is placed in an unconditioned space, a 6” wide piece of insulation should be applied and wrapped around the outside of coil casing and supply duct contact point.
NOTE: Consult the furnace installation instructions for any special requirements when installing the coil to the furnace.

Downflow Coil Installation

IMPORTANT: If the airflow is high due to ductwork or other causes, and there is a chance for water blow off, it is recommended that a 4-in. minimum field-supplied adapter be placed between the coil and the furnace to allow the air to distribute evenly to both coil slabs.

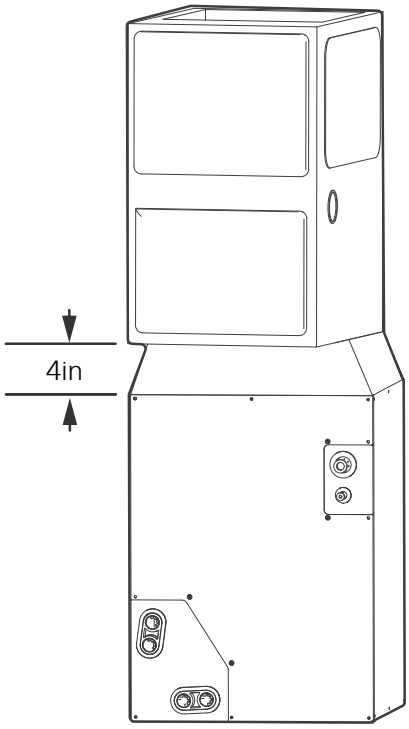

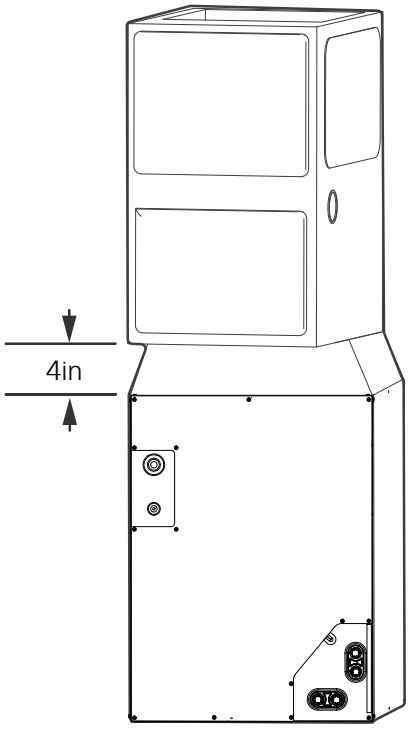

1. Set cased coil on supply duct opening.
2. Place field fabricated 4-in. minimum adapter on coil casing. Adapter should be tapered to fit coil/furnace combination when one of them is larger than the other.
3. Set furnace on adapter.

NOTE: In downflow installation with a 4-way multiposition furnace, break off perforated duct flanges on furnace. See furnace installation instructions.

7.2 INSTALLATION OF REFRIGERANT SENSOR

The wire of the refrigerant sensor must be connected to the leak mitigation control kit. For specific operation instructions, please refer to the Wiring Diagrams and Explanatory label of the leak mitigation control kit.

WARNING: When using a gas furnace for heating, ensure that the heat exchanger temperature does not exceed 200°F.Exceeding this temperature may cause the refrigerant leak sensor to malfunction, which can lead to a hazardous situation.

Horizontal Coil Installation

The unit can be installed on a work platform, secured to roof truss in attic, suspended from hangers on floor joists in crawl space, or installed on blocks. It is designed to allow airflow in either direction, to mate with horizontal-left or horizontal-right furnace installations. Ensure coil cabinet is level side to side and front to back. It is allowable to add up to 1/2-in. additional slope over length and depth of coil cabinet in the direction of drain pan connection.

Horizontal Right Installation

1. Use field fabricated attachment plates to secure coil to furnace.
2. Use self-tapping screws to mount attachment plates to coil casing.
3. Connect furnace snugly against coil casing.
4. Use self-tapping screws to attach furnace.
5. Seal joint between coil casing and furnace to create an air tight seal using locally approved materials.
6. If coil is wider than furnace, use 4-in minimum transition and self-tapping screws to attach furnace.

Horizontal Left Installation

1. Unbend the 4 tabs at the right side of the casing.
2. Connect furnace snugly against coil casing.
3. Use self-tapping screws to attach furnace.
4. Seal joint between coil casing and furnace to create air tight seal using locally approved materials.
5. If coil is wider than furnace, use 4-in. Minimum transition and self-tapping screws to attach furnace.

7.3 REFRIGERANT LINE CONNECTIONS

⚠ WARNING

- Failure to follow this warning could result in personal injury. Wear eye protection.
- Coil is factory charged with 15 psi nitrogen. The coil is under pressure and TXV screen is in place behind liquid line plug. DO NOT remove liquid line plug first, always remove the suction line plug first to depressurize the coil.

NOTE: Factory nitrogen charge may escape past rubber plugs during storage. This does not indicate a leaking coil nor warrant return of the coil. Size and install refrigerant lines according to information provided with outdoor unit.
Route refrigerant lines to the coil in a manner that will not obstruct service access to the unit or removal of the filter. Do not use damaged, dirty, or contaminated tubing because it may plug refrigerant flow-control device. ALWAYS evacuate the coil and field-supplied tubing before opening outdoor unit service valves.

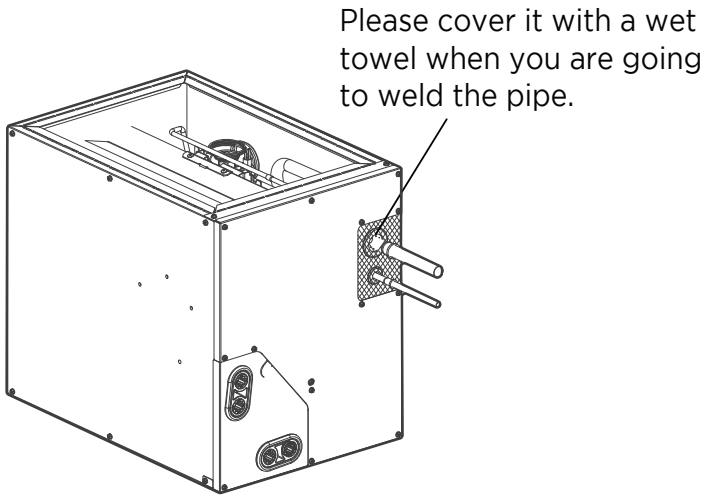

7.4 CONNECT REFRIGERANT, LIQUID, AND SUCTION LINES

For matched systems, use line sizes recommended in outdoor unit Installation Instructions.

⚠ CAUTION

Failure to follow this caution may result in property damage. Take precautions to ensure Aluminum tubes do not come in direct contact or allow for condensate run off with a dissimilar metal. Dissimilar metals can cause galvanic corrosion and possible premature failure.

The coil can be connected to outdoor units using field-supplied tubing of refrigerant grade. Always evacuate tubing and reclaim refrigerant when making connections or flaring tubing. Leak check connections before insulating entire suction line.

1. Remove cabinet access door.
2. Remove rubber plugs, suction plug then liquid plug, from coil stubs using a pulling and twisting motion. Hold coil stubs steady to avoid bending or distorting.
3. Remove tubing plate with rubber grommets and slide plate with grommets onto the refrigerant lines (field line-set), away from braze joints.
4. Fit refrigerant lines into coil stubs. Wrap a heat sinking material such as a wet cloth behind braze joints.
5. Wrap TXV and nearby tubing with a heat-sinking material such as a wet cloth.
6. Use 1/2 Psig Nitrogen purge in the suction and out the liquid line.
7. Braze using a Sil-Fos or Phos-copper alloy. Do not use soft solder.
8. After brazing, allow joints to cool. Carefully remove TXV bulb insulation and verify that the TXV bulb is securely fastened with hose clamp. Tighten screw a half-turn past hand tight with TXV bulb placed in the indentation with full contact with the vapor line tube. Re-wrap TXV bulb with insulation.
9. Leak check connections before insulating entire suction line.
10. Slide tubing plate with rubber grommets over joints. Position tubing at center of each grommet to ensure an air seal around the tube. Reinstall cabinet door.

⚠ CAUTION

Failure to follow this caution may result in product damage. To avoid valve damage to the refrigerant control device while brazing, valves must be wrapped with a heat-sinking material such as a wet cloth.

7.5 REFRIGERANT METERING DEVICE

These Coils have a factory installed hard shut-off TXV designed only for use with R454B refrigerant. Use only with outdoor units designed for R454B.
NOTE: ALL TXV'S HAVE PRESET SUPERHEAT SETTINGS AND ARE FIELD NON-ADJUSTABLE.

⚠ CAUTION

Failure to follow this caution may result in product damage. DO NOT BURY MORE THAN 36 IN. OF REFRIGERANT TUBING IN GROUND. If any section of tubing is buried, there must be a 6 in. vertical rise to the valve connections on the outdoor unit. If more than the recommended length is buried, refrigerant may migrate to cooler buried section during extended periods of unit shutdown, causing refrigerant slugging and possible compressor damage at start-up.

7.6 CONDENSATE DRAIN LINE CONNECTION

⚠ CAUTION

Failure to follow this caution may result in property damage. When installing over a finished ceiling and/or living area, install a field-fabricated secondary condensate pan under the entire unit.

The coil is designed to dispose of accumulated water through built-in condensate drain fittings. It is recommended that PVC fittings be used on the condensate pan. Do not over-tighten. Finger tighten plus 1-1/2 turns. Be sure to install plastic plug in unused condensate drain fitting. Two 3/4 inch female threaded pipe connections are provided in each coil condensate pan. A trap is not necessary on the condensate line if on the supply air side of furnace. Consult local codes for additional restrictions or precautions. If local codes require a trap, then the following guidelines are suggested to assure proper drainage. Install a trap in condensate line of coil as close to the coil as possible. Make trap at least 3 inches (76 mm) deep and no higher than the bottom of unit condensate drain opening . Pitch condensate line 1 inch (25.4 mm) for every 10 ft. of length to an open drain or sump. Make sure that the outlet of each trap is below its connection to condensate pan to prevent condensate from overflowing the drain pan. Prime all traps, test for leaks, and insulate traps and lines if located above a living area.

⚠ WARNING

- Failure to follow this warning could result in personal injury or death. Provide trap with air gap in drain line when connecting to waste (sewer) line.

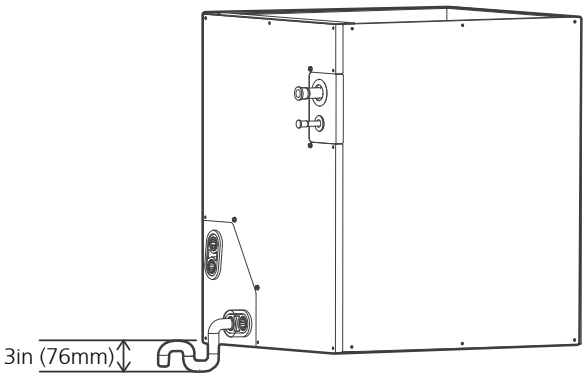

NOTE: If unit is located in or above a living space, where damage may result from condensate overflow, a field-supplied, external condensate pan should be installed underneath the entire unit, and a secondary condensate line (with appropriate trap) should be run from the unit into the pan. Any condensate in this external condensate pan should be drained to a noticeable place. As an alternative to using an external condensate pan, some localities may allow the running of a separate 3/4 inch (19 mm) condensate line (with appropriate trap) per local code to a place where the condensate will be noticeable. The owner of the structure must be informed that when condensate flows from secondary drain or external condensate pan, the unit requires servicing or water damage will occur. To further protect against water damage. install a float switch to shut the unit off if the water in the secondary pan gets too high.

7.7 WASTE LINE CONNECTION

If the condensate line is to be connected to a waste (sewer) line, an open trap must be in stalled ahead of the waste line to prevent escape of sewer gases.

8. AIR DUCT INSTALLATION

1. Flanged mounting

Clamp it in the middle of the hole and bend it up 90 degrees

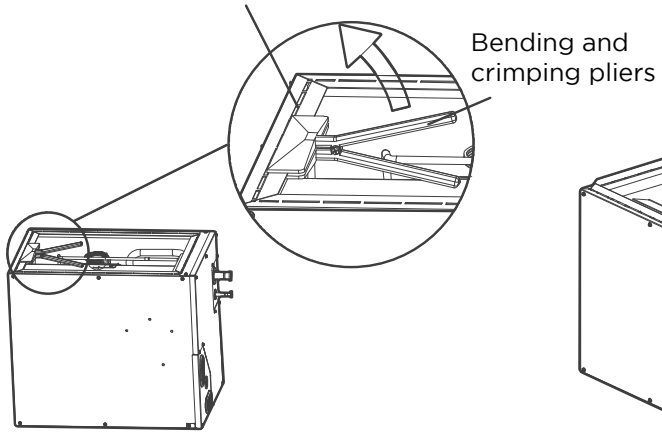

step 1 :Use a tool to fold up the flange

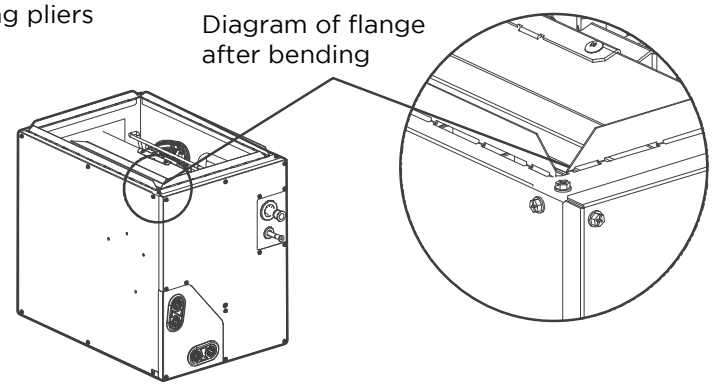

Step 2:Fold the flanges around

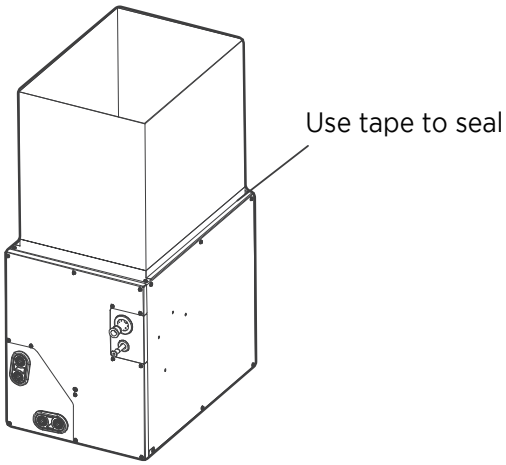

step3: Seal all sides with tape and keep warm with sponge

9. A-COIL MINI INTERFACE INSTALLATION

1. Choose Install Location

   Priority should be given to installing on the front of the coil, or you can choose to install it on the side or on nearby walls as needed.

2. Dismantling panels

   Figure 1: Installed on the side of the coil.（Vertical mounting, you can choose left or right)

   Figure 2: Installed on the wall of the coil attach. (Horizontal mounting)

   Figure 3: Installed on the wall of the coil attach.

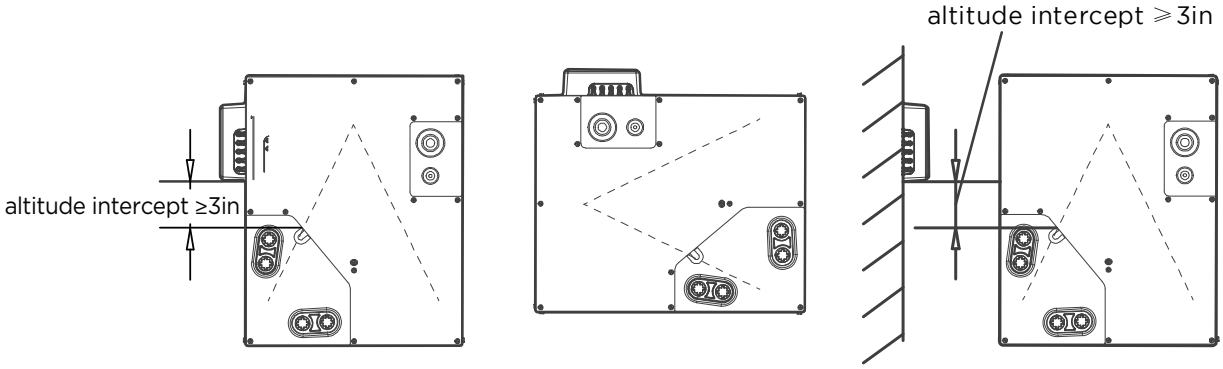

Figure 1 Figure 2 Figure 3

3. Dismantling the control box

   Using a screwdriver, pull at the two positions shown in the diagram.

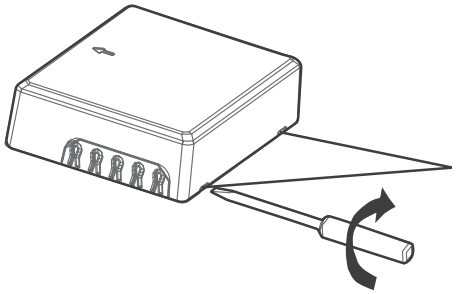

Using a flat-head screwdriver, insert the two marked positions and gently rotate the screwdriver to open the cover.

4. Fixed Box

   Fix 3 screws, 2 of which require drilling.

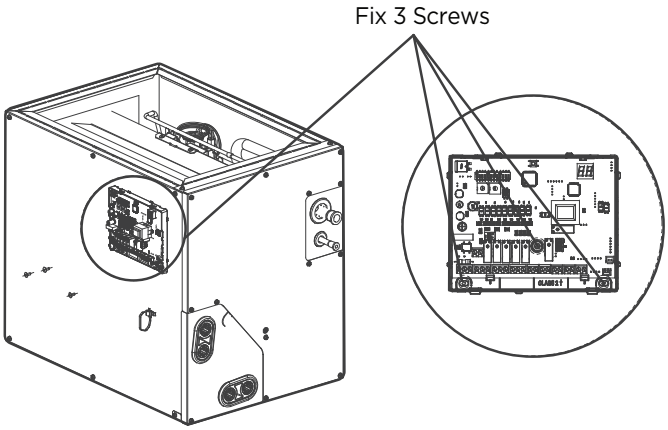

5. Cut off the cover wiring port

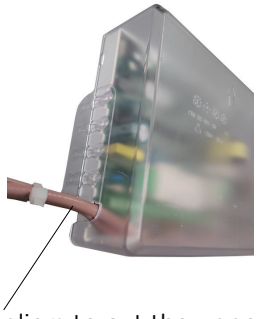

Use pliers to cut the upper cover, and cut the left position according to the diagram.

Close the cover photo

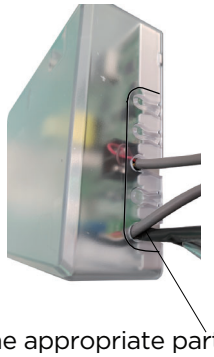

Cut off the appropriate part according to the position for wires outlet. If it is a single wire, you can cut a single wire hole, if there are multiple wires, you can cut off the cover along the maximum outline.

6. Close the lid

Close the cover to complete the installation of the control box.

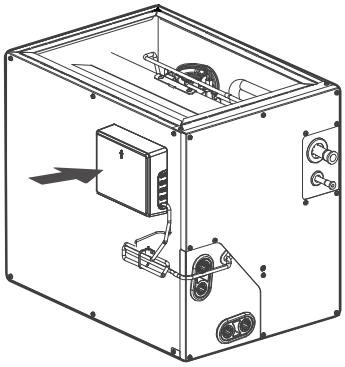

WIRING PRECAUTIONS

⚠ WARNING

BEFORE PERFORMING ANY ELECTRICAL WORK, READ THESE WARNINGS.

- All wiring must comply with local and national electrical codes, regulations and must be installed by a licensed electrician.
- All electrical connections must be made according to the Electrical Connection Diagram located on the panels of the indoor and outdoor units.
- If there is a serious safety issue with the power supply, stop work immediately. Explain your reasoning to the client, and refuse to install the unit until the safety issue is properly resolved.
- Power voltage should be within 90-110% of rated voltage. Insufficient power supply can cause malfunction, electrical shock, or fire.
- Installation of an external surge suppressor at the outdoor disconnect is recommended.
- If connecting power to fixed wiring, a switch or circuit breaker that disconnects all poles and has a contact separation of at least 1/8in (3mm) must be incorporated in the fixed wiring. The qualified technician must use an approved circuit breaker or switch.
- Only connect the unit to an individual branch circuit. Do not connect another appliance to that Circuit.
- Make sure to properly ground the air conditioner.
- Every wire must be firmly connected. Loose wiring can cause the terminal to overheat, resulting in product malfunction and possible fire.
- Do not let wires touch or rest against refrigerant tubing, the compressor, or any moving parts within the unit.
- To avoid getting an electric shock, never touch the electrical components soon after the power supply has been turned off. After turning off the power, always wait 10 minutes or more before you touch the electrical components.
- Make sure that you do not cross your electrical wiring with your signal wiring. This may cause distortion, interference or
- possibly damage to circuit boards.
- No other equipment should be connected to the same power circuit.
- Connect the outdoor wires before connecting the indoor wires.

⚠ WARNING

BEFORE PERFORMING ANY ELECTRICAL OR WIRING WORK, TURN OFF THE MAIN POWER TO THE SYSTEM.

Wiring overview

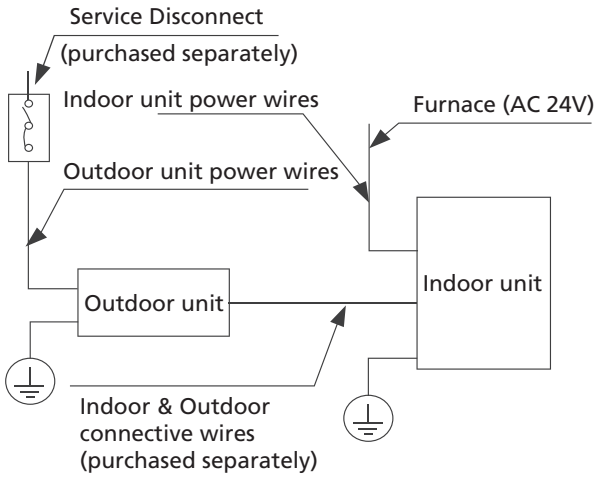

NOTICE

The diagrams are for explanation purpose only. Your machine may be slightly different. The actual diagram shall prevail.
Service Disconnect shall select as required by Local, regional, and national codes.

INDOOR UNIT WIRING

The power to the unit must be disconnected before any wiring. Be sure to show application of ferrite clamp and room temp sensor and cable. Make note to review the different application (scenarios) options for proper wiring. Make sure strain relief and proper conduit are used when connecting to the box, recommended use of metal-clad cable.

NOTE: Use copper wire only. Separate the power supply leads and communication leads by the strain relief or segregate the power supply leads from communication leads.

Instruction for installation of the critical-to-safety wiring connection of the leak detection sensor or leak detection system to the furnace assembly.

The wiring shall be not less than 18 AWG with a minimum insulation thickness of 1.58 mm or protected from damage. Critical-to-safety wiring is any field installed wiring necessary to fulfill the requirements of minimum room area in the event of detection of a leak.

The appliance shall not be installed on furnaces with an inductive electrical greater than Le as calculated as follows:

the switched electrical load (Le) in kVA is less than or equal to:

- Le = 5 x (6,7/Su)4 when breaking all phases;
- Le = 2,5 x (6,7/Su)4 when breaking two legs of a three-phase load, or when breaking one or

two legs of a single-phase load.

Where Le is the switched inductive electrical load in kilo volt-amperes (kVA); Su is the burning velocity of a refrigerant in centimeters per second (cm/s).

Detection of a leak shall turn on the indoor fan at the highest available speed or turn it on to not less than minimum airflow (Qhmin).

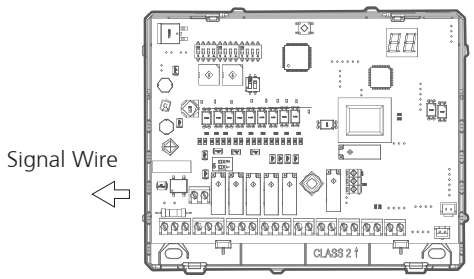

LINES GAUGE		
OUTDOOR-INDOOR SIGNAL WIRE	LINE DIAMETER(AWG)	20
24V SIGNAL WIRE	LINE DIAMETER(AWG)	18

RATINGS:

Electrical –INPUTS:

Input Type	Input Rating	Terminals	Recommend Wire Range / Torque
Power Input	24 V ac, 60 Hz, 300mA, Class 2	Terminal Block CN1-3(R), CN1-2(C)	14-22 AWG / 0.5 N·m
Remote Control Signal Input	12 V DC, SELV	CN2	14-22 AWG / 0.5 N·m

COMMUNICATION:

Type	Rating	Terminal	Recommend Wire Range / Torque
Communication Between Indoor and Outdoor Unit	5 V DC, Class 2, Limited Energy (≤15 W)	CN17	14-22 AWG / 0.5 N·m
Communication Between Data Conversion Board and External Thermostat	24 V AC, 60 Hz,Class 2	CN4, CN6, CN11	14-22 AWG / 0.5 N·m
Communication Between Data Conversion Module PWB and Centralized Controller	5 V DC, Class 2	CN3	14-22 AWG / 0.5 N·m
External Communication	18 V DC, Class 2, Limited Energy (≤15 W)	CN19	14-22 AWG / 0.5 N·m
Communication Between Data Conversion Module PWB and Refrigerant Sensor	5V DC, Class 2	CN5,CN8	14-22 AWG / 0.5 N·m

OUTPUTS:

Type	Rating	Terminal	Recommend Wire Range / Torque
Control Device for Furnace (Relay RY7, RY8)	24 V AC, 60 Hz,Class 2, General Use(Signal Use)	CN9	14-22 AWG / 0.5 N·m
Control Device for Furnace (Relay, RY9, RY10)	24 V AC, 60 Hz,Class 2, General Use(Signal Use)	CN10	14-22 AWG / 0.5 N·m
Control Device for Outdoor Unit When full 24V communication (Relay, RY11)		CN43	14-22 AWG / 0.5 N·m

WIRING DIAGRAM

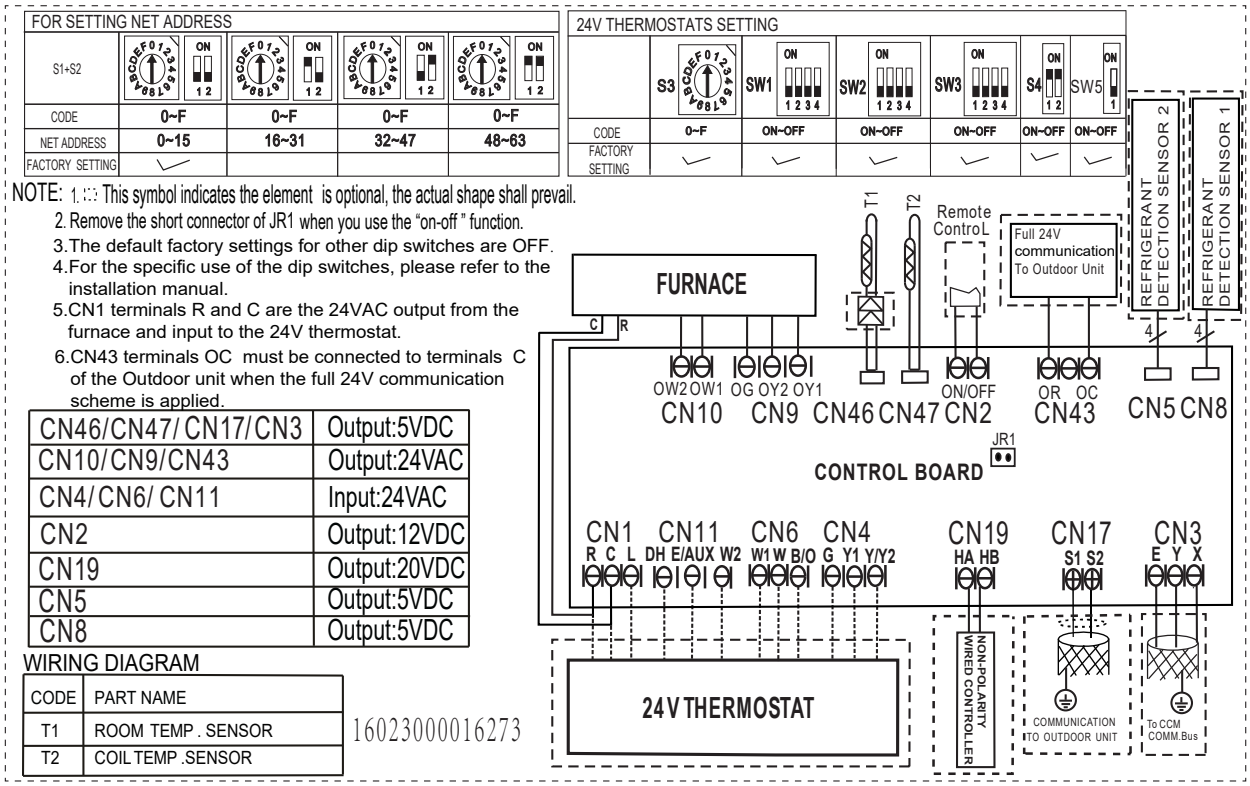

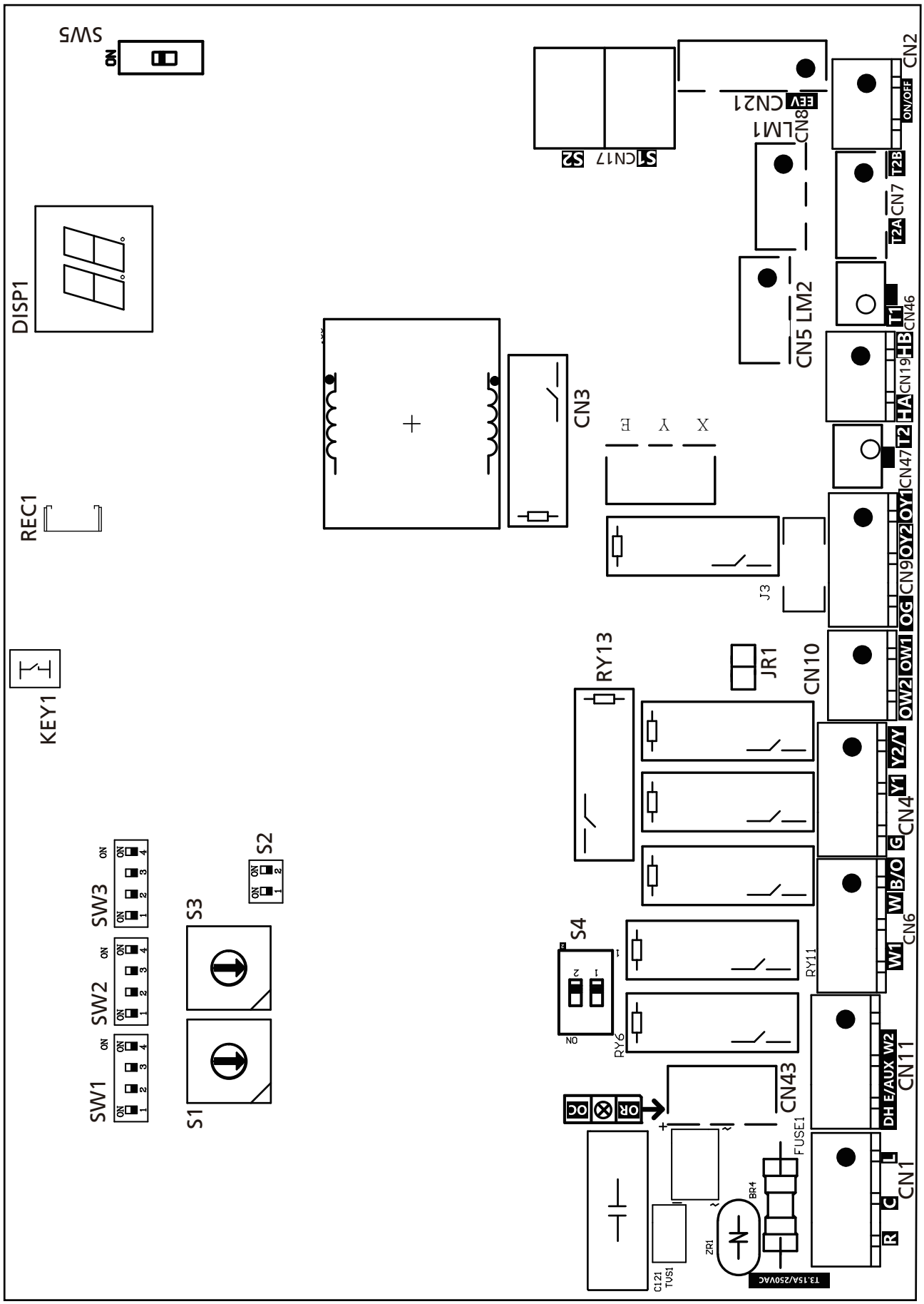
SW5
ON
DISP1
REC1
KEY1
SW1
SW2
SW3
S1
S2
S3
S4
ON
RY6
RY11
RY13
JR1
CN10
CN3
CN5 LM2
CN8
LM1
CN21
EEV
CN17
S1
S2
CN2
ON/OFF
T2B
CN7
T2A
T1
CN46
HB
CN19
HA
T2
CN47
OY1
OY2
CN9
OG
OW1
OW2
Y2/Y
Y1
CN4
G
B/O
W
CN6
W1
W2
CN11
DH E/AUX
L
CN1
C
R
CN43
OC
OR
FUSE1
BR4
ZR1
C121
TUS1
T3.15A/250VAC

CONTROL SIGNALS TO THE FURNACE

Control signals to the furnace are the standard thermostat control signals R,C,OW1,OW2, OG, OY1 and OY2.

Connector	Usage
R	Provides 24VAC power from the furnace to the board.
C	The 24VAC common wire between the furnace and the board.
OW1	First stage of furnace command line from the board to the furnace (OW1-W1). If the furnaces that only have a W and do not have a W2, connect OW1 to the W of the furnace and make no connection with the OW2 signal wire (OW1-W).
OW2	Second stage of furnace command line from the board to the furnace (OW2-W2). OW2 cannot be ON unless OW1 is already ON.
OG	Connect the OG singal to G of the furnace (OG-G). If the furnaces that do not have a G, connect OG to the Y or Y1 of the furnace (OG-Y or OG-Y1).
OY1	For 1-speed configuration, connect the OY1 signal to Y of the furnace and make no connection with the OY2 signal wire (OY1-Y). For 2-speed configuration, connect the OY1 signal to Y1 of the furnace (OY1-Y1).
OY2	For 2-speed configuration, connect the OY2 signal to Y2 of the furnace (OY2-Y2). In this configuration, the OY2 signal turns on as follows: In Cool mode or Heat mode with HP when high speed fan is requested. In Auto Fan and Cool mode, the signal goes to high speed when the difference between room temperature and set point temperature is more than or equal to 1.5°C. The signal goes back to low speed when the temperature difference is less than 1°C. In Auto Fan and Heat mode with the HP, the signal goes to high speed when the difference between room temperature and set point temperature is less than or equal to -1.5°C. The signal goes back to low speed when the temperature difference is more than 0°C.

In addition:

Room temperature sensor to be installed in the return air

Duct temperature sensor to be installed on the COIL as specified

SPECIFIC WIRING METHODS

⚠ WARNING

Please refer to the wiring nameplate for the wiring method. Do not connect the power cord to the communication line, as this may damage the system.

NOTE: For method A & B equipment must have S1 & S2 communication between indoor and outdoor units.

Connection method A:

Full communication.

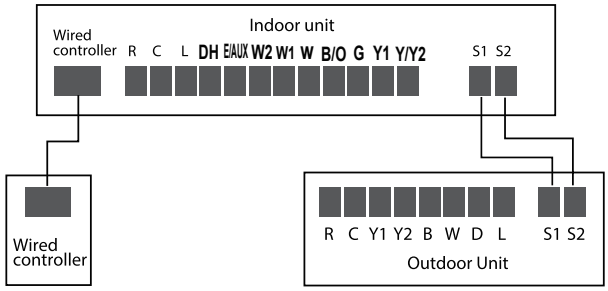

Connection method B:

To use a 24V thermostat.

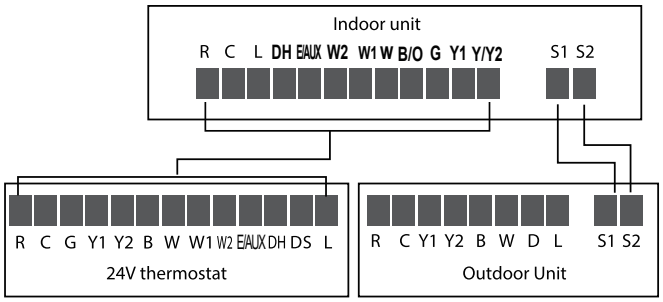

When using a 24V thermostat, please refer to the non-communicating wiring diagrams that follow:

Connection method C:

The following wiring diagram are suitable for the AHU and ODU with 24V thermostat.

Non-communication scheme wiring reference

• Wiring for 4H and 2C thermostat

Note: CN43 terminals OC of A-COIL Mini Interface must be connected to outdoor unit when the full 24V communication scheme is applied. That will stop the operation of outdoor for safety if the refrigerant leakage happen.

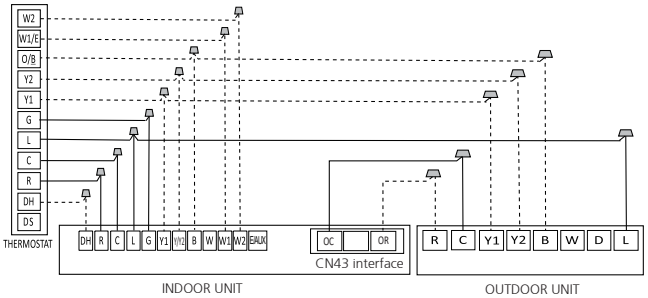

S4-2 Default on, DH function off. Turn switch off to activate DH function.

S4-1 Default on, W1 and W2 shorted for single stage Aux heat operation. Turn off to separate stages.

• Wiring for 3H and 1C thermostat

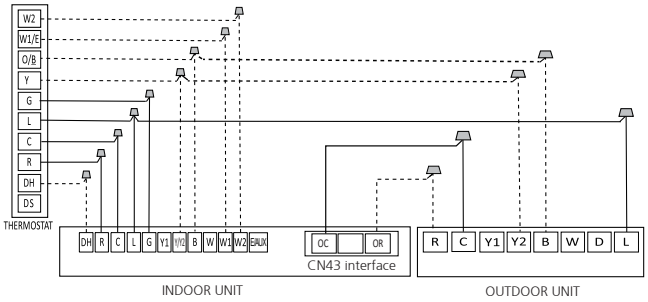

S4-2 Default on, DH function off. Turn switch off to activate DH function.

S4-1 Default on, W1 and W2 shorted for single stage Aux heat operation. Turn off to separate stages.

• Wiring for 3H and 2C thermostat

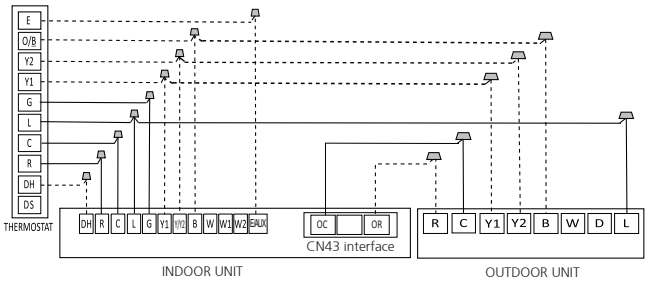

S4-2 Default on, DH function off. Turn switch off to activate DH function.

• Wiring for 3H and 2C thermostat

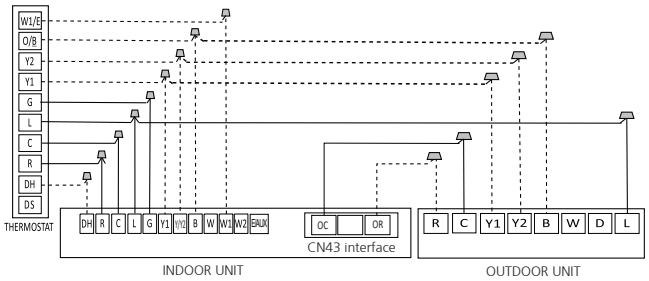

S4-2 Default on, DH function off. Turn switch off to activate DH function.

S4-1 Default on, W1 and W2 shorted for single stage Aux heat operation. Turn off to separate stages.

• Wiring for 2H and 1C thermostat

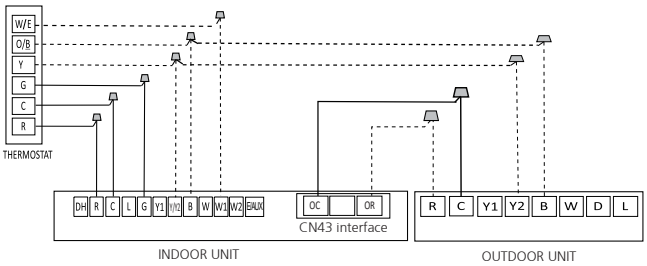

S4-1 Default on, W1 and W2 shorted for single stage Aux heat operation. Turn off to separate stages.

• Wiring for 2H and 2C thermostat

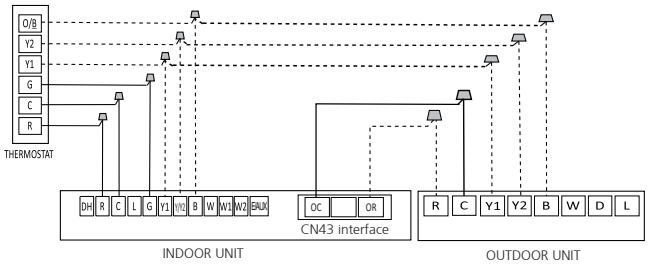

• Wiring for 1H and 1C thermostat

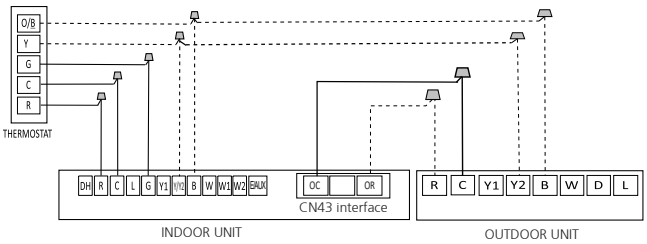

DIP SWITCH DEFINITIONS

Function DIP switch settings:

The 24V thermostat mode needs to refer to the following settings:

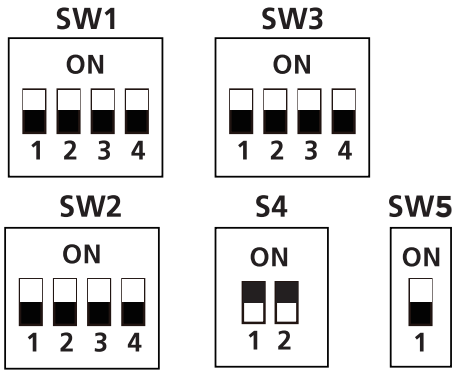

Function combination table of SW1-1 and SW1-4:

SW1	Control type	IDU and ODU Connection	Note
ON 1 2 3 4	Wired controller / 24V thermostat	(S1+S2) / 24V connection	Auto Discovery
ON 1 2 3 4	Wired controller	S1+S2	Scenario 2
ON 1 2 3 4	24V Thermostat	S1+S2	Scenario 1
ON 1 2 3 4	24V Thermostat	24V connection	Scenario 3

Control Box Dial code

No.	Dial Code	Control Scenario	Function	ON	OFF	Note
1	SW1-2	1,2	Anti-cold blow protection option	NO	[Default] YES	
2	SW1-3	1,2,3	Single cooling / heating and cooling options	Cooling	[Default] Cooling & Heating	
3	SW2-1	2	Temperature differential to active first stage furnace heating for HP+furnace mode.	2℃	[Default] 1℃	

4	SW2-4	1	Compressor	The operation of heat pump is limited by the outdoor temperature, and the operation of furnace heat is not limited. The system makes judgments based on the following rules: 1) The compressor cannot be operated when the outdoor temperature is lower than the S3 DIP switch. 2) The compressor can be operated when the outdoor temperature is ⩾S3 DIP switch temperature +2 °C.		SW2-4 and S3 need to working together
5	SW2-4	2	Compressor/ Auxiliary heat outdoor ambient lockout	The operation of heat pump is limited by the outdoor temperature, and the opera tion of auxiliary heat is not limited. The system makes judgments according to the following rules: 1) The compressor can be operated when the outdoor tempera ture is ≥S3 DIP switch temperature +2 °C. 2) The compressor cannot be operated when the outdoor temperature is lower than the S3 DIP switch temperature.	[Default] Only one heat pump or auxiliary heat can be operated. The system makes judgments according to the following rules: 1) When the outdoor temperature is lower than the S3 DIP switch temperature, the compressor is not allowed to operated, but auxiliary heat is allowed to operated; 2) When the outdoor temperature is ≥S3 DIP switch temperature +2(°C), the compressor can be operated, but auxiliary heat cannot be operated.	
6	Rotary Switch S3	1,2	Set outdoor temperature Limitation (for auxiliary heating or compressor)	Table A		
7	SW3-1	1	system automatically stages up capacity to satisfy set point. This adds 1 to 5°F to the user set point in the calculated control point to increase capacity and satisfy user set point.	30 minutes	[Default] 90 minutes	
8	SW3-2	1	Cooling and heating Y/Y2 temperature differential adjustment.	Compressor slower speed	[Default] Faster Compressor	Only affects compressor
9	SW3-3	2	Temperature differential to active second stage furnace heating for furnace only or HP+furnace mode.	3℃	[Default]2℃	
10	S4-1	1,3	Default ON	[Default] For single stage supplemental heat, W1 and W2 are connected	For dual stage supplemental heat, W1 and W2 are controlled independently	
11	S4-2	1,3	DH function selection	[Default] Dehumidification control not available	Dehumidification feature is enabled through thermostat	
12	SW5	1,2,3	Selection of the second Refrigerant Sensor	Both Refrigerant Sensor are used	[Default] Only use the first Refrigerant Sensor, interface is CN8	

Control Scenario	24V Tstat, S1+S2	1
	Wired Controller S1+S2	2
	Full 24V	3

Table A

S3	S3 (°F)	S3 (°C)
0	OFF	OFF
1	-22	-30
2	-18	-28
3	-15	-26
4	-11	-24
5	-8	-22
6	-4	-20
7	3	-16
8	10	-12
9	18	-8
A	25	-4
B	32	0
C	36	2
D	39	4
E	43	6
F	46	8

DESCRIPTION OF WIRED CONTROLLER MODES

FURNACE	Single-furnace heating
Heat PUMP	HP heating
DUAL FUEL	Furnace heating, HP heating automatic control

TEST RUN

⚠ CAUTION

Failure to perform the test run may result in unit damage, property damage, or personal injury.

Before test run

A test run must be performed after the entire system has been completely installed. Confirm the following points before performing the test:
a) Indoor and outdoor units are properly installed.
b) Piping and wiring are properly connected.
c) No obstacles near the inlet and outlet of the unit that might cause poor performance or product malfunction.
d) Refrigeration system does not leak.
e) Drainage system is unimpeded and draining to a safe location.
f) Insulation of piping and duct is properly installed.
g) Grounding wires are properly connected.
h) Length of the piping and additional refrigerant capacity have been recorded.
i) Power voltage is the correct voltage for the air conditioner

Test run instructions

1. Open both the liquid and gas service valves.
2. Turn on the main power switch and allow the unit to warm up.
3. Set the air conditioner to COOL mode.
4. For the Indoor Unit
   a. Double check to see if the room temperature is being registered correctly.
   b. Ensure the manual buttons on the indoor unit works properly.
   c. Check to see that the drainage system is unimpeded and draining smoothly.
   d. Ensure there is no vibration or abnormal noise during operation.
5. For the Outdoor Unit
   a. Check to see if the refrigeration system is leaking.
   b. Make sure there is no vibration or abnormal noise during operation.
   c. Ensure the wind, noise, and water generated by the unit do not disturb your neighbors or pose a safety hazard.
6. Drainage Test
   a. Ensure the drainpipe flows smoothly. New buildings should perform this test before finishing the ceiling.
   b. Turn on the main power switch and run the air conditioner in COOL mode.
   c. Check to see that the water is discharged. It may take up to one minute before the unit begins to drain depending on the drainpipe.
   d. Make sure that there are no leaks in any of the piping.
   e. Stop the air conditioner. Turn off the main power switch and reinstall the test cover.

NOTICE

If the unit malfunctions or does not operate according to your expectations, please refer to the Troubleshooting section of Service Manual before calling customer service.

24V SIGNAL CHART(COOLING & HEATING)

Mode	Priority	G	Y1	Y/Y2	B	W	W1	W2	E/AUX	DH	Display
OFF	/	0	0	0	0	0	0	0	0	*	00
FAN	7	1	0	0	*	0	0	0	0	*	01
Cooling stage 1	6	*	1	0	0	0	0	0	0	1	02
Cooling stage 2		*	*	1	0	0	0	0	0	1	03
Dehumidification 1		*	1	0	0	0	0	0	0	0	04
Dehumidification 2		*	*	1	0	0	0	0	0	0	05
Heat pump stage 1	5	*	1	0	1	0	0	0	0	1	06
Heat pump stage 2		*	*	1	1	0	0	0	0	1	07
Heat pump stage 2		*	*	*	*	1	0	0	0	1	
Furnace	3	*	0	0	*	0	1	0	0	*	12
Furnace		*	0	0	*	0	0	1	0	*	
Furnace		*	0	0	*	0	1	1	0	*	12
Furnace	4	*	1	0	1	0	1	0	0	1	12
Furnace		*	1	0	1	0	0	1	0	1	
Furnace		*	*	1	1	0	1	0	0	1	
Furnace		*	*	*	*	1	1	0	0	1	
Furnace		*	*	1	1	0	0	1	0	1	
Furnace		*	*	*	*	1	0	1	0	1	
Furnace		*	1	0	1	0	1	1	0	1	12
Furnace		*	*	1	1	0	1	1	0	1	
Furnace		*	*	*	*	1	1	1	0	1	
Furnace	1	*	*	*	*	*	*	*	1	*	12
Heating zone control	2	*	1	0	1	0	*	*	0	0	13
Heating zone control		*	*	1	1	0	*	*	0	0	
Heating zone control		*	*	*	*	1	*	*	0	0	

Note:
1: 24V signal
0: No 24V signal
*: 1 or 0.
The AHU will turn off if the 24V input cannot meet the table.

24V SIGNAL CHART(COOLING ONLY)

Mode	Priority	G	Y1	Y/Y2	B	W	W1	W2	E/AUX	DH	Display
OFF	/	0	0	0	0	0	0	0	0	*	00
FAN	7	1	0	0	*	0	0	0	0	*	01
Cooling stage 1	6	*	1	0	0	0	0	0	0	1	02
Cooling stage 2		*	*	1	0	0	0	0	0	1	03
Dehumidification 1		*	1	0	0	0	0	0	0	0	04
Dehumidification 2		*	*	1	0	0	0	0	0	0	05
Furnace	5	*	1	0	1	0	0	0	0	1	12
Furnace		*	*	1	1	0	0	0	0	1	12
Furnace		*	*	*	*	1	0	0	0	1	
Furnace	3	*	0	0	*	0	1	0	0	*	12
Furnace		*	0	0	*	0	0	1	0	*	
Furnace		*	0	0	*	0	1	1	0	*	12
Furnace	4	*	1	0	1	0	1	0	0	1	12
Furnace		*	1	0	1	0	0	1	0	1	
Furnace		*	*	1	1	0	1	0	0	1	
Furnace		*	*	*	*	1	1	0	0	1	
Furnace		*	*	1	1	0	0	1	0	1	
Furnace		*	*	*	*	1	0	1	0	1	
Furnace		*	1	0	1	0	1	1	0	1	12
Furnace		*	*	1	1	0	1	1	0	1	
Furnace		*	*	*	*	1	1	1	0	1	
Furnace	1	*	*	*	*	*	*	*	1	*	12
Furnace	2	*	1	0	1	0	*	*	0	0	12
Furnace		*	*	1	1	0	*	*	0	0	
Furnace		*	*	*	*	1	*	*	0	0	

Note:
1: 24V signal
0: No 24V signal
*: 1 or 0.
The AHU will turn off if the 24V input cannot meet the table.

The design and specifications are subject to change without prior notice for product improvement. Consult with the sales agency or manufacturer for details. Any updates to the manual will be uploaded to the service website, please check for the latest version.

QS004UI-ACOIL+MCOIL