Multi position Heat Pump Evaporator with TXV - R410A

Owner's Manual & Installation Manual

Panasonic®

Availability of replacement parts, repair services, and information for maintenance or repair

Spare parts

Available through authorized dealer/contractor only

Repair services

Available through authorized dealer/contractor only

Information for maintenance or repair

Customer maintenance covered in Owner's Manual

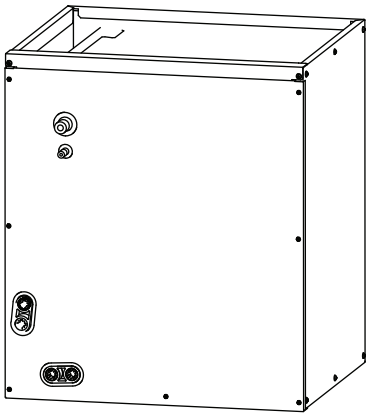

(Old style)

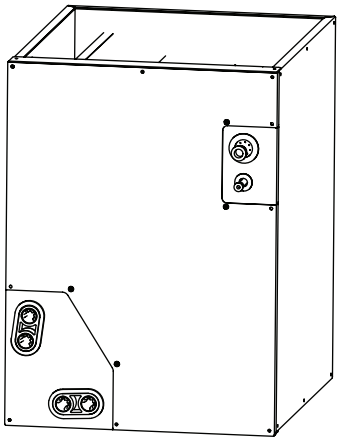

(New style)

IMPORTANT NOTE:

Read this manual carefully before installing or operating your new air conditioning unit. Make sure to save this manual for future reference.

This manual is applicable to both new and old styles, with only slight differences in appearance.

Table of Contents

SAFETY PRECAUTIONS 04

INTRODUCTION 07

INSTALLATION 08

1. INSTALLATION OF EVAPORATOR COILS 08
2. REFRIGERANT LINE CONNE 10
3. CONNECT REFRIGERA 10
4. REFRIGERANT METERING DEVICE 11
5. CONDENSATE DRAIN LINECONNECTION 11
6. WASTE LINE CONNECTION 12
7. REMOVE COIL FROM THE CASE 12

CARE AND MAINTENANCE 13

SAFETY PRECAUTIONS

Read Safety Precautions Before Operation and Installation

Incorrect installation due to ignoring instructions can cause serious damage or injury.
The seriousness of potential damage or injuries is classified as either a **WARNING** or **CAUTION**.

WARNING
This symbol indicates the possibility of personnel injury or loss of life.

CAUTION
This symbol indicates the possibility of property damage or serious consequences.

⚠ WARNING

This appliance can be used by children aged from 8 years and above and persons with reduced physical, sensory or mental capabilities or lack of experience and knowledge if they have been given supervision or instruction concerning use of the appliance in a safe way and understand the hazards involved. Children shall not play with the appliance. Cleaning and user maintenance shall not be made by children without supervision.

This appliance is not intended for use by persons (including children) with reduced physical, sensory or mental capabilities, or lack of experience and knowledge, unless they have been given supervision or instruction concerning use of the appliance by a person responsible for their safety. Children should be supervised to ensure that they do not play with the appliance.

⚠ WARNINGS FOR PRODUCT USE

- If an abnormal situation arises (like a burning smell), immediately turn off the unit and disconnect the power. Call your dealer for instructions to avoid electric shock, fire or injury.
- **Do not** insert fingers, rods or other objects into the air inlet or outlet. This may cause injury, since the fan may be rotating at high speeds.
- **Do not** use flammable sprays such as hair spray, lacquer or paint near the unit. This may cause fire or combustion.
- **Do not** operate the air conditioner in places near or around combustible gases. Emitted gas may collect around the unit and cause explosion.
- **Do not** operate your air conditioner in a wet room such as a bathroom or laundry room. Too much exposure to water can cause electrical components to short circuit.
- **Do not** expose your body directly to cool air for a prolonged period of time.
- **Do not** allow children to play with the air conditioner. Children must be supervised around the unit at all times.
- If the air conditioner is used together with burners or other heating devices, thoroughly ventilate the room to avoid oxygen deficiency.
- In certain functional environments, such as kitchens, server rooms, etc., the use of specially designed air-conditioning units is highly recommended.
- Improper installation, adjustment, alteration, service or maintenance can cause property damage, personal injury or loss of life. Installation and service must be performed by a licensed professional HVAC installer or equivalent, service agency, or the gas supplier.

CLEANING AND MAINTENANCE WARNINGS

- Turn off the device and disconnect the power before cleaning. Failure to do so can cause electrical shock.
- **Do not** clean the air conditioner with excessive amounts of water.
- **Do not** clean the air conditioner with combustible cleaning agents. Combustible cleaning agents can cause fire or deformation.

⚠ CAUTION

- Turn off the air conditioner and disconnect the power if you are not going to use it for a long time.
- Turn off and unplug the unit during storms.
- Make sure that water condensation can drain unhindered from the unit.
- **Do not** operate the air conditioner with wet hands. This may cause electric shock.
- **Do not** use device for any other purpose than its intended use.
- **Do not** climb onto or place objects on top of the outdoor unit.
- **Do not** allow the air conditioner to operate for long periods of time with doors or windows open, or if the humidity is very high.
- As with any mechanical equipment, contact with sharp sheet metal edges can result in personal injury. Take care while handling this equipment and wear gloves and protective clothing.

⚠ ELECTRICAL WARNINGS

- Only use the specified power cord. If the power cord is damaged, it must be replaced by the manufacturer, its service agent or similarly qualified persons in order to avoid a hazard.
- Keep power plug clean. Remove any dust or grime that accumulates on or around the plug. Dirty plugs can cause fire or electric shock.
- **Do not** pull power cord to unplug unit. Hold the plug firmly and pull it from the outlet. Pulling directly on the cord can damage it, which can lead to fire or electric shock.
- **Do not** modify the length of the power supply cord or use an extension cord to power the unit.
- **Do not** share the electrical outlet with other appliances. Improper or insufficient power supply can cause fire or electrical shock.
- The product must be properly grounded at the time of installation, or electrical shock may occur.
- For all electrical work, follow all local and national wiring standards, regulations, and the Installation Manual. Connect cables tightly, and clamp them securely to prevent external forces from damaging the terminal. Improper electrical connections can overheat and cause fire, and may also cause shock. All electrical connections must be made according to the Electrical Connection Diagram located on the panels of the indoor and outdoor units.
- All wiring must be properly arranged to ensure that the control board cover can close properly. If the control board cover is not closed properly, it can lead to corrosion and cause the connection points on the terminal to heat up, catch fire, or cause electrical shock.
- If connecting power to fixed wiring, an all-pole disconnection device which has at least 3mm clearances in all poles, and have a leakage current that may exceed 10mA, the residual current device(RCD) having a rated residual operating current not exceeding 30mA, and disconnection must be incorporated in the fixed wiring in accordance with the wiring rules.

⚠ WARNINGS FOR PRODUCT INSTALLATION

1. Installation must be performed by an authorized dealer or specialist. Defective installation can cause water leakage, electrical shock, or fire.
2. Installation must be performed according to the installation instructions. Improper installation can cause water leakage, electrical shock, or fire.
   (In North America,installation must be performed in accordance with the requirement of NEC and CEC by authorized personnel only.)
3. Contact an authorized service technician for repair or maintenance of this unit. This appliance shall be installed in accordance with national wiring regulations.
4. Only use the included accessories, parts, and specified parts for installation. Using non-standard parts can cause water leakage, electrical shock, fire, and can cause the unit to fail.
5. Install the unit in a firm location that can support the unit's weight. If the chosen location cannot support the unit's weight, or the installation is not done properly, the unit may drop and cause serious injury and damage.
6. Install drainage piping according to the instructions in this manual. Improper drainage may cause water damage to your home and property.
7. For units that have an auxiliary electric heater, **do not** install the unit within 1 meter (3 feet) of any combustible materials.
8. **Do not** install the unit in a location that may be exposed to combustible gas leaks. If combustible gas accumulates around the unit, it may cause fire.
9. Do not turn on the power until all work has been completed.
10. When moving or relocating the air conditioner, consult experienced service technicians for disconnection and reinstallation of the unit.
11. Follow all safety codes. Wear safety glasses, protective clothing, and work gloves. Use quenching cloth for brazing operations. Have fire extinguisher available.
12. Excessive Weight Hazard - Use two or more people when moving and installing the unit. Failure to do so can result in back or other type of injury.
13. Take precautions to ensure Aluminum tubes do not come in direct contact or allow for condensate run off with a dissimilar metal. Dissimilar metals can cause galvanic corrosion and possible premature failure.
14. Failure to follow this caution may result in personal injury.
    Sheet metal parts may have sharp edges or burrs. Use care and wear appropriate protective clothing and gloves when handling parts.

INTRODUCTION

Use this instruction manual to install indoor coil on multipoise furnaces.
The coil is enclosed in a casing.

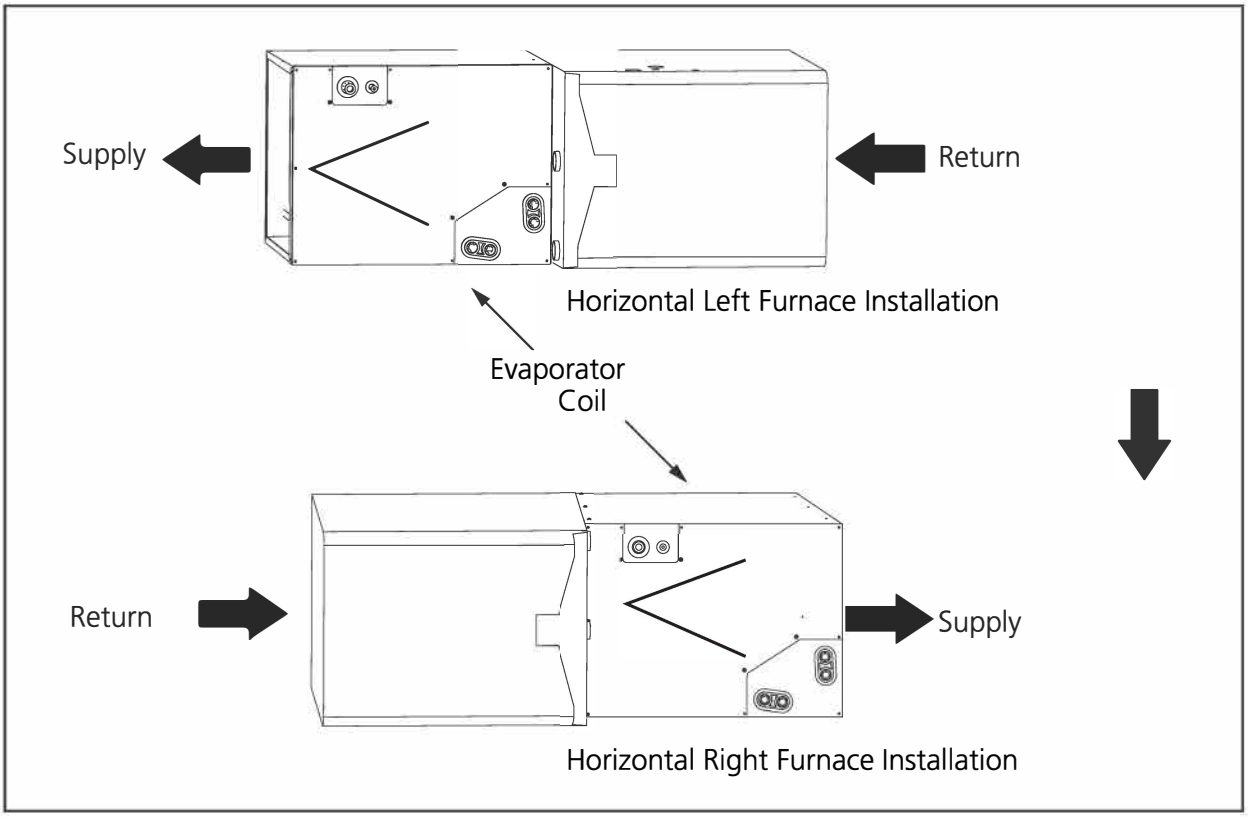

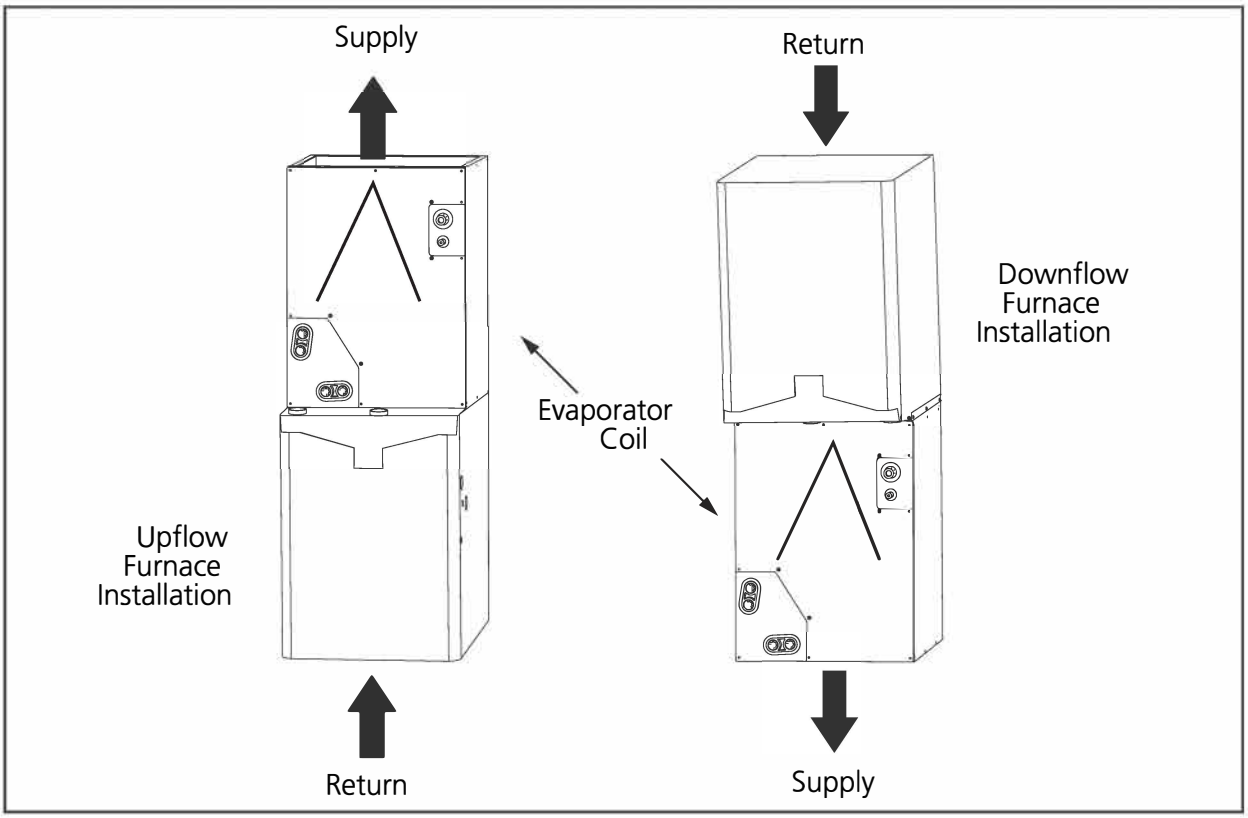

Typical Coil Installation on Furnace

INSTALLATION

1.INSTALLATION OF EVAPORATOR COILS

Upflow coil installation

The cased coil is designed to fit furnaces of the same width.

1. Set coil in place on upflow furnace discharge air opening.
2. Ensure coil is level for proper condensate drainage. Do not tip coil toward condensate drain. Coil casing need not be fastened or screwed to furnace.
3. When installing wider coil on narrow furnace, create field fabricated adapter.

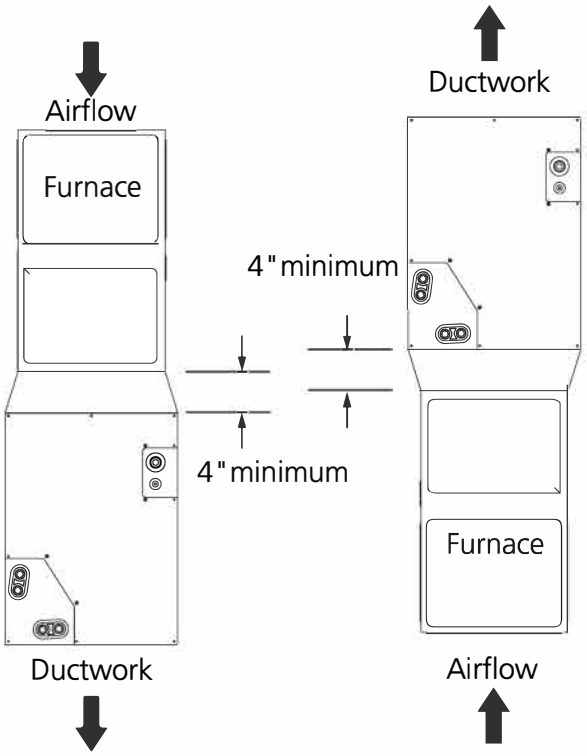

Vertical Upflow & Downfolw Installation

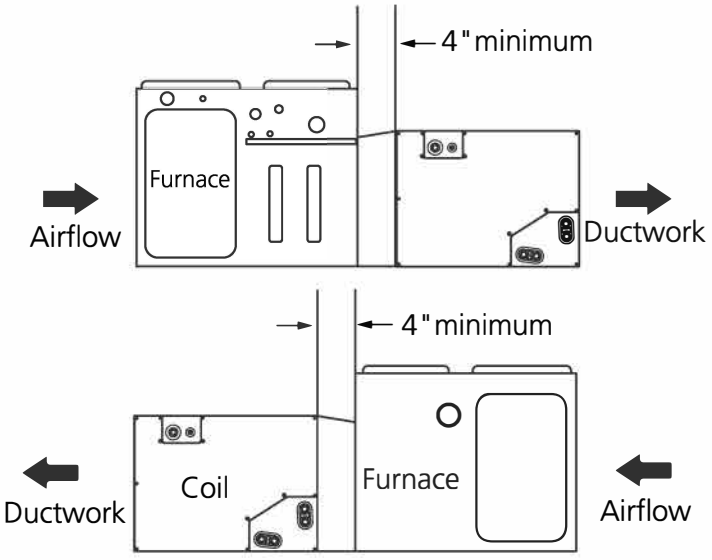

Horizontal Right & Left Installation

Adapter(s) Installation When Coil Overhangs Furnace

NOTE: On upflow installations where the indoor coil is placed in an unconditioned space, a 6” wide piece of insulation should be applied and wrapped around the outside of coil casing and supply duct contact point.

NOTE: Consult the furnace installation instructions for any special requirements when installing the coil to the furnace.

Downflow Coil Installation

IMPORTANT: Installing "A" coils rotated 90 degrees from the front of the furnace in downflow applications can cause water blow off or coil freeze up. This is due to the concentration of air on one coil slab or lack of air on the opposite coil slab. If the airflow is high due to ductwork or other causes, and there is a chance for water blow off, it is recommended that a 4-in. minimum field-supplied adapter be placed between the coil and the furnace to allow the air to distribute evenly to both coil slabs.

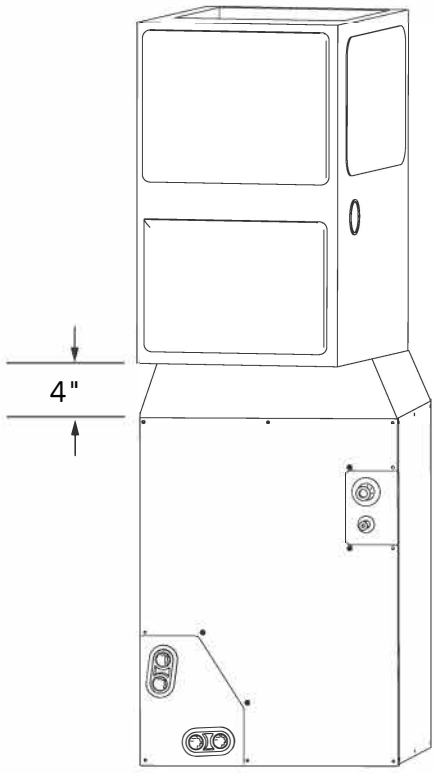

Downflow Installation with Coil Rotated 90°

4. Set cased coil on supply duct opening.
5. Place field fabricated 4-in. minimum adapter on coil casing. Adapter should be tapered to fit coil/furnace combination when one of them is larger than the other.
6. Set furnace on adapter.

NOTE: In downflow installation with a 4-way multipoise furnace, break off perforated duct flanges on furnace. See furnace installation instructions.

Horizontal Coil Installation

The unit can be installed on a work platform, secured to roof truss in attic, suspended from hangers on floor joists in crawl space, or installed on blocks. It is designed to allow airflow in either direction, to mate with horizontal-left or horizontal-right furnace installations. Ensure coil cabinet is level side to side and front to back. It is allowable to add up to 1/2-in. additional slope over length and depth of coil cabinet in the direction of drain pan connection.

Horizontal Right Installation

1. Use field fabricated attachment plates to secure coil to furnace.
2. Use self-tapping screws to mount attachment plates to coil casing.
3. Connect furnace snugly against coil casing.
4. Use self-tapping screws to attach furnace.
5. Seal joint between coil casing and furnace to create an air tight seal using locally approved materials.
6. If coil is wider than furnace, use 4-in minimum transition and self tapping screws to attach furnace.

Horizontal Left Installation

1. Unbend the 4 tabs at the right side of the casing.
2. Connect furnace snugly against coil casing.
3. Use self-tapping screws to attach furnace.
4. Seal joint between coil casing and furnace to create air tight seal using locally approved materials.
5. If coil is wider than furnace, use 4-in. Minimum transition and self tapping screws to attach furnace.

2.REFRIGERANT LINE CONNECTIONS

⚠ WARNING

- Failure to follow this warning could result in personal injury. Wear eye protection.
- Coil is factory charged with 15 psi nitrogen. The coil is under pressure and TXV screen is in place behind liquid line plug. DO NOT remove liquid line plug first, always remove the suction line plug first to depressurize the coil.

NOTE: Factory nitrogen charge may escape past rubber plugs during storage. This does not indicate a leaking coil nor warrant return of the coil.

Size and install refrigerant lines according to information provided with outdoor unit. Coil connection tube sizes are shown in Table .

Route refrigerant lines to the coil in a manner that will not obstruct service access to the unit or removal of the filter.

Do not use damaged, dirty, or contaminated tubing because it may plug refrigerant flow-control device. ALWAYS evacuate the coil and field-supplied tubing before opening outdoor unit service valves.

Please cover it with a wet towel when you are going to weld the pipe.

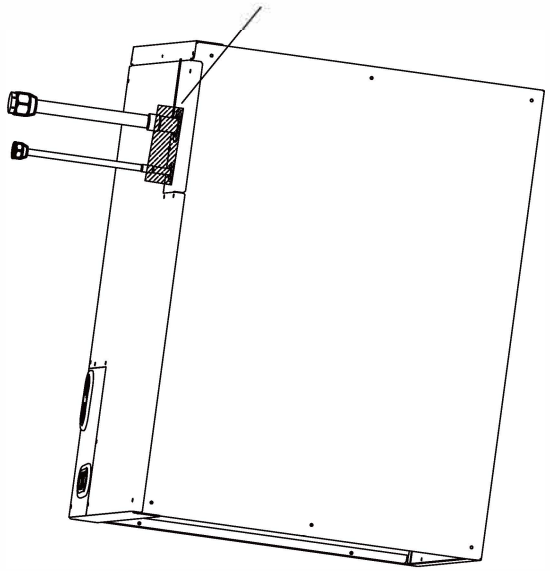

3.CONNECT REFRIGERANT, LIQUID, and SUCTION LINES

For matched systems, use line sizes recommended in outdoor unit Installation Instructions.

⚠ CAUTION

Failure to follow this caution may result in property damage.

Take precautions to ensure Aluminum tubes do not come in direct contact or allow for condensate run off with a dissimilar metal. Dissimilar metals can cause galvanic corrosion and possible premature failure.

The coil can be connected to outdoor units using field-supplied tubing of refrigerant grade.

Always evacuate tubing and reclaim refrigerant when making connections or flaring tubing.

Leak check connections before insulating entire suction line.

See Table for coil connection tube size.

1. Remove cabinet access door.
2. Remove rubber plugs, suction plug then liquid plug, from coil stubs using a pulling and twisting motion. Hold coil stubs steady to avoid bending or distorting.
3. Remove tubing plate with rubber grommets and slide plate with grommets onto the refrigerant lines (field line-set), away from braze joints.
4. Fit refrigerant lines into coil stubs. Wrap a heat sinking material such as a wet cloth behind braze joints.
5. Wrap TXV and nearby tubing with a heat-sinking material such as a wet cloth.
6. Use 1/2 psig Nitrogen purge in the suction and out the the liquid line.
7. Braze using a Sil-Fos or Phos-copper alloy. Do not use soft solder.

8. After brazing, allow joints to cool. Carefully remove TXV bulb insulation and verify that the TXV bulb is securely fastened with hose clamp. Tighten screw a half-turn past hand tight with TXV bulb placed in the indentation with full contact with the vapor line tube. Re-wrap TXV bulb with insulation.
9. Leak check connections before insulating entire suction line.
10. Slide tubing plate with rubber grommets over joints. Position tubing at center of each grommet to ensure an air seal around the tube. Reinstall cabinet door.

⚠ CAUTION

Failure to follow this caution may result in product damage.
To avoid valve damage to the refrigerant control device while brazing, valves must be wrapped with a heat-sinking material such as a wet cloth.

4.REFRIGERANT METERING DEVICE

These Coils have a factory installed hard shut-off TXV designed only for use with R-410A refrigerant. Use only with outdoor units designed for R-410A.
NOTE: ALL TXV'S HAVE PRESET SUPERHEAT SETTINGS AND ARE FIELD NON-ADJUSTABLE.

⚠ CAUTION

Failure to follow this caution may result in product damage.
DO NOT BURY MORE THAN 36 IN. OF REFRIGERANT TUBING IN GROUND. If any section of tubing is buried, there must be a 6 in. vertical rise to the valve connections on the outdoor unit. If more than the recommended length is buried, refrigerant may migrate to cooler buried section during extended periods of unit shutdown, causing refrigerant slugging and possible compressor damage at start-up.

5.CONDENSATE DRAIN LINE CONNECTION

⚠ CAUTION

Failure to follow this caution may result in property damage.
When installing over a finished ceiling and/ or living area, install a field-fabricated secondary condensate pan under the entire unit.

The coil is designed to dispose of accumulated water through built-in condensate drain fittings. It is recommended that PVC fittings be used on the condensate pan. Do not over-tighten. Finger tighten plus 1-1/2 turns. Be sure to install plastic plug in unused condensate drain fitting. Two 3/4 inch female threaded pipe connections are provided in each coil condensate pan.
A trap is not necessary on the condensate line if on the supply air side of furnace. Consult local codes for additional restrictions or precautions. If local codes require a trap then the following guidelines are suggested to assure proper drainage. Install a trap in condensate line of coil as close to the coil as possible. Make trap at least 3 inches (76 mm) deep and no higher than the bottom of unit condensate drain opening . Pitch condensate line 1 inch (25.4 mm) for every 10 ft. of length to an open drain or sump. Make sure that the outlet of each trap is below its connection to condensate pan to prevent condensate from overflowing the drain pan. Prime all traps, test for leaks, and insulate traps and lines if located above a living area.

⚠ WARNING

- Failure to follow this warning could result in personal injury or death.
  Provide trap with air gap in drain line when connecting to waste (sewer) line.

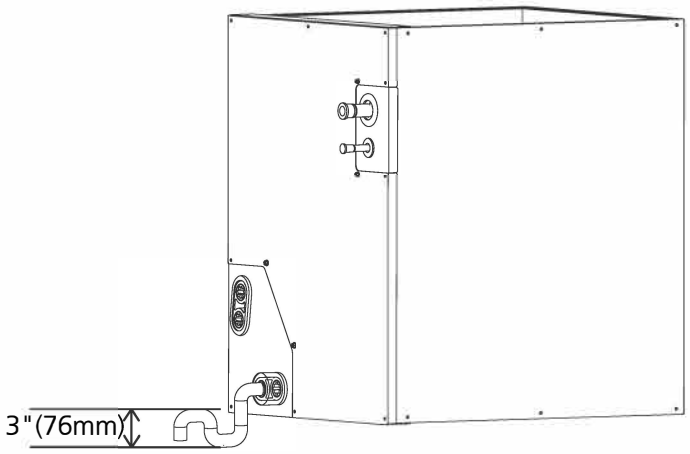

NOTE: If unit is located in or above a living space, where damage may result from condensate overflow, a field-supplied, external condensate pan should be installed underneath the entire unit, and a secondary condensate line (with appropriate trap) should be run from the unit into the pan. Any condensate in this external condensate pan should be drained to a noticeable place. As an alternative to using an external condensate pan, some localities may allow the running of a separate 3/4 inch (19 mm) condensate line (with appropriate trap) per local code to a place where the condensate will be noticeable. The owner of the structure must be informed that when condensate flows from secondary drain or external condensate pan, the unit requires servicing or water damage will occur. To further protect against water damaqe. install a float switch to shut the unit off if the water in the secondary pan gets too high.

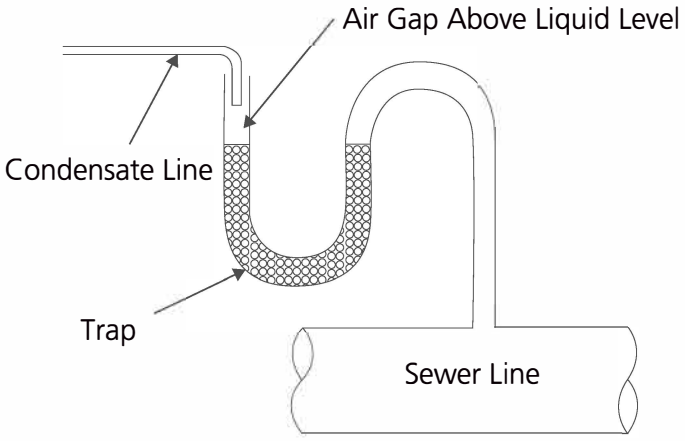

6.WASTE LINE CONNECTION

If the condensate line is to be connected to a waste (sewer) line, an open trap must be in stalled ahead of the waste line to prevent escape of sewer gases.

7. REMOVE COIL FROM THE CASE

STEP 1 Remove these screws and remove the upper panel.

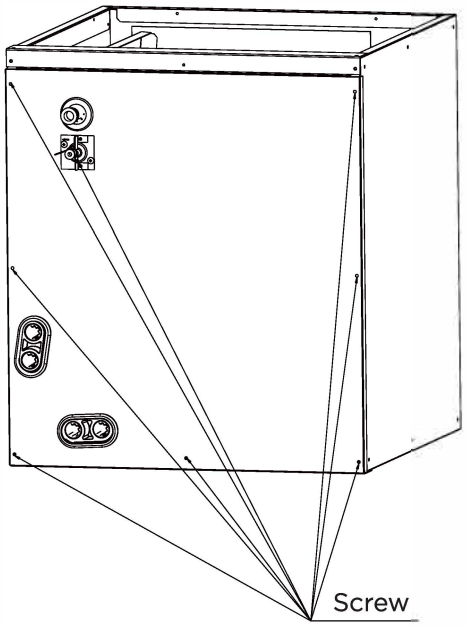

STEP 2 Pull out the evaporator.

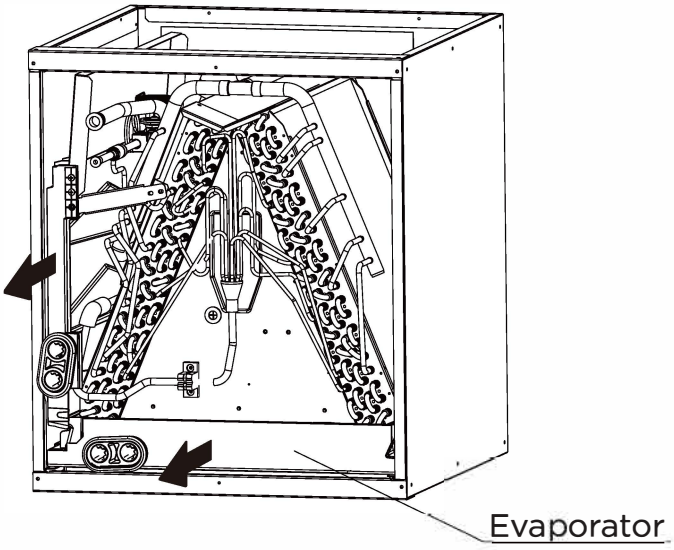

CARE AND MAINTENANCE

To continue high performance and minimize possible equipment failure, it is essential that periodic maintenance be performed on this equipment. Consult your local dealer as to the proper frequency of maintenance, but it should be done at least annually.
The ability to properly perform maintenance on this equipment requires certain mechanical skills and tools. If you do not possess these, contact your dealer for maintenance. The only consumer service recommended or required is filter replacement or cleaning on a monthly basis.

⚠ CAUTION

Failure to follow this caution may result in environmental damage.
Remove and recycle all components or materials (i.e., oil, refrigerant,etc.) before unit final disposal.

The design and specifications are subject to change without prior notice for product improvement. Consult with the sales agency or manufacturer for details. Any updates to the manual will be uploaded to the service website, please check for the latest version.