Order No: PAPAMY2001025CE

Service Manual

Air Conditioner



Indoor Unit	Outdoor Unit
CS-XE9WKUAW	CU-XE9WKUA
CS-XE12WKUAW	CU-XE12WKUA
CS-XE15WKUAW	CU-XE15WKUA
CS-XE18WKUAW	CU-XE18WKUA
CS-XE24WKUAW	CU-XE24WKUA

Destination
U.S.A.
Canada

⚠ WARNING

This service information is designed for experienced repair technicians only and is not designed for use by the general public.
It does not contain warnings or cautions to advise non-technical individuals of potential dangers in attempting to service a product.
Products powered by electricity should be serviced or repaired only by experienced professional technicians. Any attempt to service or repair the products dealt with in this service information by anyone else could result in serious injury or death.

IMPORTANT SAFETY NOTICE

There are special components used in this equipment which are important for safety. These parts are marked by ⚠ in the Schematic Diagrams, Circuit Board Diagrams, Exploded Views and Replacement Parts List. It is essential that these critical parts should be replaced with manufacturer's specified parts to prevent shock, fire or other hazards. Do not modify the original design without permission of manufacturer.

⚠ PRECAUTION OF LOW TEMPERATURE

In order to avoid frostbite, be assured of no refrigerant leakage during the installation or repairing of refrigerant circuit.

Panasonic®

© Panasonic Corporation 2020.

TABLE OF CONTENTS

1. Safety Precautions 3

2. Specifications 5

3. Features.....20

4. Location of Controls and Components.....21

4.1 Indoor Unit 21
4.2 Outdoor Unit 21
4.3 Remote Control 22

5. Dimensions 23

5.1 Indoor Unit 23
5.2 Outdoor Unit 25

6. Refrigeration Cycle Diagram 27

6.1 CS-XE9WKUAW CU-XE9WKUA
CS-XE12WKUAW CU-XE12WKUA 27
6.2 CS-XE15WKUAW CU-XE15WKUA 28
6.3 CS-XE18WKUAW CU-XE18WKUA
CS-XE24WKUAW CU-XE24WKUA 29

7. Block Diagram 30

7.1 CS-XE9WKUAW CU-XE9WKUA
CS-XE12WKUAW CU-XE12WKUA 30
7.2 CS-XE15WKUAW CU-XE15WKUA
CS-XE18WKUAW CU-XE18WKUA
CS-XE24WKUAW CU-XE24WKUA 31

8. Wiring Connection Diagram 32

8.1 Indoor Unit 32
8.2 Outdoor Unit 34

9. Electronic Circuit Diagram 37

9.1 Indoor Unit 37
9.2 Outdoor Unit 39

10. Printed Circuit Board 42

10.1 Indoor Unit 42
10.2 Outdoor Unit 46

11. Installation Instruction 48

11.1 Select the Best Location 48
11.2 Indoor Unit 49
11.3 Outdoor Unit 53

12. Installation Instruction 57

12.1 Select the Best Location 57
12.2 Indoor Unit 58
12.3 Outdoor Unit 62

13. Operation Control 65

13.1 Basic Function 65
13.2 Indoor Fan Motor Operation 66
13.3 Outdoor Fan Motor Operation 67
13.4 Airflow Direction 68
13.5 Quiet operation (Cooling Mode/Cooling area of Dry Mode) 70
13.6 Powerful Mode Operation 70
13.7 Timer Control 70
13.8 Auto Restart Control 71
13.9 Indication Panel 71
13.10 Room Freeze Protection Function (RFP) Operation 71
13.11 nanoe™ X Operation 72
13.12 Wireless LAN Control 74
13.13 Electric Heater Control 1 76
13.14 Electric Heater Control 2 77
13.15 Base Pan Heater Control 77

14. Protection Control 78

14.1 Protection Control For All Operations 78
14.2 Protection Control For Cooling & Soft Dry Operation 80
14.3 Protection Control For Heating Operation 81

15. Servicing Mode 83

15.1 Auto OFF/ON Button 83
15.2 Cooling Only Operation 84
15.3 Remote Control Button 85

16. Troubleshooting Guide 86

16.1 Refrigeration Cycle System 86
16.2 Breakdown Self Diagnosis Function 88
16.3 Error Codes Table 89
16.4 Self-diagnosis Method 91

17. Disassembly and Assembly Instructions ... 119

17.1 CS-XE9WKUAW CS-XE12WKUAW CS-XE15WKUAW 119
17.2 CS-XE18WKUAW CS-XE24WKUAW 124
17.3 Outdoor Electronic Controller Removal Procedure 129
17.4 To Set Panasonic Comfort Cloud App. After Replace Main Printed Circuit Board and Wireless LAN Module 132

18. Technical Data 142

18.1 Cool Mode Performance Data 142
18.2 Heat Mode Performance Data 148

19. Service Data 151

19.1 Cool Mode Outdoor Air Temperature Characteristic 151
19.2 Heat Mode Outdoor Air Temperature Characteristic 156
19.3 Piping Length Correction Factor 161

20. Exploded View and Replacement Parts List 164

20.1 Indoor Unit 164
20.2 Outdoor Unit 172

• Specifications, designs and contents in this Service Manual are subject to change without notice.

1. Safety Precautions

- Read the following “SAFETY PRECAUTIONS” carefully before installation.
- Electrical work must be installed by a licensed electrician. Be sure to use the correct rating of the power plug and main circuit for the model to be installed.
- The caution items stated here must be followed because these important contents are related to safety. The meaning of each indication used is as below. Incorrect installation due to ignoring of the instruction will cause harm or damage, and the seriousness is classified by the following indications.

⚠ **WARNING**	This indication shows the possibility of causing death or serious injury.
⚠ **CAUTION**	This indication shows the possibility of causing injury or damage to properties only.

- The items to be followed are classified by the symbols:

⃠	Symbol with white background denotes item that is PROHIBITED.
❗ ⏚	Symbol with dark background denotes item that must be carried out.

- Carry out test run to confirm that no abnormality occurs after the servicing. Then, explain to user the operation, care and maintenance as stated in instructions. Please remind the customer to keep the operating instructions for future reference.

	⚠ **WARNING**	
1.	Do not install outdoor unit near handrail of veranda. When installing air-conditioner unit on veranda of a high rise building, child may climb up to outdoor unit and cross over the handrail causing an accident.	⃠
2.	Do not use unspecified cord, modified cord, joint cord or extension cord for power supply cord. Do not share the single outlet with other electrical appliances. Poor contact, poor insulation or over current will cause electrical shock or fire.	⃠
3.	Do not tie up the power supply cord into a bundle by band. Abnormal temperature rise on power supply cord may happen.	⃠
4.	Do not insert your fingers or other objects into the unit, high speed rotating fan may cause injury. 	⃠
5.	Do not sit or step on the unit, you may fall down accidentally. 	⃠
6.	Keep plastic bag (packaging material) away from small children, it may cling to nose and mouth and prevent breathing. 	⃠
7.	When installing or relocating air conditioner, do not let any substance other than the specified refrigerant, eg. air etc mix into refrigeration cycle (piping). Mixing of air etc will cause abnormal high pressure in refrigeration cycle and result in explosion, injury etc.	⃠
8.	Do not add or replace refrigerant other than specified type. It may cause product damage, burst and injury etc.	⃠
9.	• For R32/R410A model, use piping, flare nut and tools which is specified for R32/R410A refrigerant. Using of existing (R22) piping, flare nut and tools may cause abnormally high pressure in the refrigerant cycle (piping), and possibly result in explosion and injury. • For R32 and R410A, the same flare nut on the outdoor unit side and pipe can be used. • Since the working pressure for R32/R410A is higher than that of refrigerant R22 model, replacing conventional piping and flare nuts on the outdoor unit side are recommended. • If reuse piping is unavoidable, refer to instruction “IN CASE OF REUSING EXISTING REFRIGERANT PIPING” • Thickness for copper pipes used with R32/R410A must be more than 1/32" (0.8 mm). Never use copper pipes thinner than 1/32" (0.8 mm). • It is desirable that the amount of residual oil is less than 0.0008 oz/ft (40 mg/10 m) (XE9/12/XE15) and 0.00004 oz/ft (40 mg/10 m) (XE18/XE24).	
10.	Engage authorized dealer or specialist for installation. If installation done by the user is incorrect, it will cause water leakage, electrical shock or fire.	
11.	Install according to this installation instructions strictly. If installation is defective, it will cause water leakage, electrical shock or fire.	
12.	Use the attached accessories parts and specified parts for installation. Otherwise, it will cause the set to fall, water leakage, fire or electrical shock.	
13.	Install at a strong and firm location which is able to withstand the set’s weight. If the strength is not enough or installation is not properly done, the set will drop and cause injury.	
14.	For installation work, follow all electrical, building, plumbing, local codes, regulations and these installation instructions. If electrical circuit capacity is not enough or a defect is found in electrical work, it will cause electrical shock or fire.	
15.	Do not use spliced wires for indoor / outdoor connection cable. Use the specified indoor / outdoor connection cable, refer to instruction **INDOOR/OUTDOOR UNIT ELECTRICAL WIRING** and connect tightly for indoor/outdoor connection. Clamp the cable so that no external force will have impact on the terminal. If connection or fixing is not perfect, it will cause heat-up or fire at the connection.	
16.	Wire routing must be properly arranged so that control board cover is fixed properly. If control board cover is not fixed perfectly, it will cause fire or electrical shock.	
17.	This equipment must installed with an Earth Leakage Circuit Breaker (ELCB) or Ground Fault Current Interrupter (GFCI) or Appliance Leakage Current Interrupter (ALCI) that has been certified by an NRTL Certified Testing Agency and that is suitable for the voltages and amperages involved. Otherwise, if may cause electrical shock and fire in case of equipment breakdown.	

	⚠ WARNING
18.	During installation, install the refrigerant piping properly before running the compressor. Operation of compressor without fixing refrigeration piping and valves at opened condition will cause suck-in of air, abnormal high pressure in refrigeration cycle and result in explosion, injury etc.
19.	During pump down operation, stop the compressor before removing the refrigeration piping. Removal of refrigeration piping while compressor is operating and valves are opened will cause suck-in of air, abnormal high pressure in refrigeration cycle and result in explosion, injury etc.
20.	Tighten the flare nut with torque wrench according to specified method. If the flare nut is over-tightened, after a long period, the flare may break and cause refrigerant gas leakage.
21.	After completion of installation, confirm there is no leakage of refrigerant gas. It may generate toxic gas when the refrigerant comes into contact with fire.
22.	Ventilate if there is refrigerant gas leakage during operation. It may cause toxic gas when the refrigerant comes into contact with fire.
23.	This equipment must be properly earthed. Earth line must not be connected to gas pipe, water pipe, earth of lightning rod and telephone. Otherwise, it may cause electrical shock in case of equipment breakdown or insulation breakdown.

	⚠ CAUTION
1.	Do not install the unit at place where leakage of flammable gas may occur. In case gas leaks and accumulates at surrounding of the unit, it may cause fire.
2.	Do not release refrigerant during piping work for installation, re-installation and during repairing a refrigeration parts. Take care of the liquid refrigerant, it may cause frostbite.
3.	Do not install this appliance in a laundry room or other location where water may drip from the ceiling, etc.
4.	Do not touch the sharp aluminium fin, sharp parts may cause injury.
5.	Carry out drainage piping as mentioned in installation instructions. If drainage is not perfect, water may enter the room and damage the furniture.
6.	Select an installation location which is easy for maintenance.
7.	Power supply connection to the room air conditioner. Power supply cord shall be UL listed or CSA approved 3 conductor with minimum AWG14 (CU-XE9/12/15WKUA) and AWG12 (CU-XE18/24WKUA) wires. Power supply point should be in an easily accessible place for power disconnection in case of emergency. In some countries, permanent connection of this air conditioner to the power supply is prohibited. Fix power supply connection to a circuit breaker for permanent connection. Use NRTL approved fuse or circuit breaker (rating refers to name plate) for permanent connection.
8.	Installation work. It may take two people to carry out the installation work.

2. Specifications

Indoor		Model	CS-XE9WKUAW					
Outdoor		Model	CU-XE9WKUA					
Performance Test Condition			ARI					
Power Supply		Phase, Hz	Single, 60					
		V	208			230		
			Min.	Mid.	Max.	Min.	Mid.	Max.
Cooling	Capacity	kW	0.83	2.55	3.51	0.83	2.55	3.51
		BTU/h	2800	8700	12000	2800	8700	12000
	Running Current	A	-	2.90	-	-	2.60	-
	Input Power	W	150	540	850	150	540	850
	EER / EER Class	W/W	5.53	4.72	4.13	5.53	4.72	4.13
	EER	BTU/hW	18.65	16.10	14.10	18.65	16.10	14.10
	Power Factor	%	-	90	-	-	90	-
	Indoor Noise (H / L / QLo)	dB-A	42 / 25 / 20			42 / 25 / 20		
		Power Level dB	58 / - / -			58 / - / -		
	Outdoor Noise (H / L / QLo)	dB-A	48 / - / -			48 / - / -		
		Power Level dB	63 / - / -			63 / - / -		
Heating	Capacity	kW	0.89	3.21	5.29	0.89	3.21	5.29
		BTU/h	3000	10900	18000	3000	10900	18000
	Running Current	A	-	3.60	-	-	3.20	-
	Input Power	W	150	670	1.65k	150	670	1.65k
	COP / COP Class	W/W	5.93	4.79	3.21	5.93	4.79	3.21
	COP	BTU/hW	20.00	16.25	10.90	20.00	16.25	10.90
	Power Factor	%	-	89	-	-	91	-
	Indoor Noise (H / L / QLo)	dB-A	42 / 29 / 26			42 / 29 / 26		
		Power Level dB	58 / - / -			58 / - / -		
	Outdoor Noise (H / L / QLo)	dB-A	48 / - / -			48 / - / -		
		Power Level dB	63 / - / -			63 / - / -		
17°F: Rated Capacity (BTU/h) / I. Power (W)			8000 / 750					
5°F: Max. Capacity (BTU/h)			11000 / 2.30					
Max Current (A) / Max Input Power (W)			7.7 / 1.72k					
Starting Current (A)			3.60					
Compressor	Type		Hermetic Motor (Rotary)					
	Motor Type		Brushless (6-poles)					
	Output Power	W	700					

Indoor				Model	CS-XE9WKUAW	
Outdoor				Model	CU-XE9WKUA	
Indoor Fan	Type				Cross-Flow Fan	
	Material				ASG33	
	Motor Type				DC (8-poles)	
	Input Power			W	47.3	
	Output Power			W	30	
	Speed	QLo	Cool	rpm	500	
			Heat	rpm	710	
		Lo	Cool	rpm	610	
			Heat	rpm	780	
		Me	Cool	rpm	890	
			Heat	rpm	1000	
		Hi	Cool	rpm	1180	
			Heat	rpm	1220	
		SHi	Cool	rpm	1230	
			Heat	rpm	1270	
Outdoor Fan	Type				Propeller Fan	
	Material				PP	
	Motor Type				DC (8-poles)	
	Input Power			W	-	
	Output Power			W	40	
	Speed	Hi	Cool	rpm	760	
			Heat	rpm	710	
Min. Circuit Ampacity					15.00	
Max. Overcurrent Protection					15.00	
SEER / HSPF					28.20 / 14.50	
Moisture Removal				L/h (Pt/h)	0.6 (1.3)	
Indoor Airflow		QLo	Cool	m³/min (ft³/min)	4.46 (157)	
			Heat	m³/min (ft³/min)	6.43 (227)	
		Lo	Cool	m³/min (ft³/min)	5.48 (193)	
			Heat	m³/min (ft³/min)	7.09 (250)	
		Me	Cool	m³/min (ft³/min)	8.09 (286)	
			Heat	m³/min (ft³/min)	9.15 (323)	
		Hi	Cool	m³/min (ft³/min)	10.80 (380)	
			Heat	m³/min (ft³/min)	11.20 (395)	
		SHi	Cool	m³/min (ft³/min)	11.26 (398)	
			Heat	m³/min (ft³/min)	11.67 (412)	
Outdoor Airflow		Hi	Cool	m³/min (ft³/min)	30.20 (1065)	30.20 (1065)
			Heat	m³/min (ft³/min)	31.50 (1110)	31.50 (1110)
Refrigerant Cycle		Control Device			Expansion Valve	
		Refrigerant Oil		cm³	FV50S (320)	
		Refrigerant Type		g (oz)	R410A, 1200 (42.4)	

Indoor			Model	CS-XE9WKUAW	
Outdoor			Model	CU-XE9WKUA	
Dimension	Unit	Height (ID / OD)	mm (inch)	295 (11-5/8) / 622 (24-1/2)	
		Width (ID / OD)	mm (inch)	870 (34-9/32) / 824 (32-15/32)	
		Depth (ID / OD)	mm (inch)	230 (9-1/16) / 299 (11-25/32)	
Weight	Net (ID / OD)		kg (lb)	11 (24) / 37 (82)	
Stacking No. (CS / CU / CZ)				12 / 6 / -	
Piping	Pipe Diameter (Liquid / Gas)		mm (inch)	6.35 (1/4) / 9.53 (3/8)	
	Standard Length		m (ft)	7.5 (24.6)	
	Length Range (min - max)		m (ft)	3 (9.8) ~ 20 (65.6)	
	I/D & O/D Height Different		m (ft)	15.0 (49.2)	
	Additional Gas Amount		g/m (oz/ft)	15 (0.2)	
	Length for Additional Gas)		m (ft)	7.5 (24.6)	
Drain Hose	Inner Diameter		mm	16.7	
	Length		mm	650	
Indoor Heat Exchanger	Fin Material			Aluminium (Pre Coat)	
	Fin Type			Slit Fin	
	Row x Stage x FPI			2 x 17 x 21	
	Size (W x H x L)		mm	25.4 x 357 x 636.5	
Outdoor Heat Exchanger	Fin Material			Aluminium (Blue Coat)	
	Fin Type			Corrugated Fin	
	Row x Stage x FPI			2 x 28 x 17	
	Size (W x H x L)		mm	36.4 x 588 x 856.3 : 827.7	
Air Filter	Material			Polypropelene	
	Type			One-touch	
Power Supply				Outdoor	
Power Supply Cord				Nil	
Thermostat				Electronic Control	
Protection Device				Electronic Control	
				Dry Bulb	Wet Bulb
Indoor Operation Range	Cooling		Maximum °F (°C)	89.6 (32)	73.4 (23)
			Minimum °F (°C)	60.8 (16)	51.8 (11)
	Heating		Maximum °F (°C)	86.0 (30)	- / -
			Minimum °F (°C)	60.8 (16)	- / -
Outdoor Operation Range	Cooling		Maximum °F (°C)	114.8 (46)	78.8 (26)
			Minimum °F (°C)	0 / -17.8	- / -
	Heating		Maximum °F (°C)	75.2 (24)	64.4 (18)
			Minimum °F (°C)	-15 / -26	-16 / -26.7

1. Cooling capacities are based on indoor temperature of 80°F (26.7°C) DRY BULB, 67°F (19.4°C) WET BULB and outdoor air temperature of 95°F (35°C) DRY BULB, 75°F (23.8°C) WET BULB.
2. Heating capacities are based on indoor temperature of 70°F (21.1°C) DRY BULB, 60°F (15.6°C) WET BULB and outdoor air temperature of 47°F (8.3°C) DRY BULB, 43°F (6.1°C) WET BULB.
3. 17°F (-8.3°C) Heating Capacity and Input Power measured at 230V, indoor temperature 70°F (21.1°C), outdoor 17/15°F (-8.3/-9.4°C).
4. 5°F (-15°C) Heating Capacity measured at 230V, indoor temperature 70°F (21.1°C), outdoor 5°F (-15°C/-).
5. Specifications are subjected to change without prior notice for further improvement.

Indoor		Model	CS-XE12WKUAW					
Outdoor		Model	CU-XE12WKUA					
Performance Test Condition			ARI					
Power Supply		Phase, Hz	Single, 60					
		V	208			230		
			Min.	Mid.	Max.	Min.	Mid.	Max.
Cooling	Capacity	kW	0.83	3.36	4.10	0.83	3.36	4.10
		BTU/h	2800	11500	14000	2800	11500	14000
	Running Current	A	-	4.20	-	-	3.80	-
	Input Power	W	150	810	1.05k	150	810	1.05k
	EER / EER Class	W/W	5.53	4.15	3.90	5.53	4.15	3.90
	EER	BTU/hW	18.65	14.15	13.30	18.65	14.15	13.30
	Power Factor	%	-	93	-	-	93	-
	Indoor Noise (H / L / QLo)	dB-A	45 / 28 / 20			45 / 28 / 20		
		Power Level dB	61 / - / -			61 / - / -		
	Outdoor Noise (H / L / QLo)	dB-A	49 / - / -			49 / - / -		
		Power Level dB	64 / - / -			64 / - / -		
Heating	Capacity	kW	0.89	3.51	6.72	0.89	3.51	6.72
		BTU/h	3000	12000	23000	3000	12000	23000
	Running Current	A	-	4.20	-	-	3.80	-
	Input Power	W	150	800	1.80k	150	800	1.80k
	COP / COP Class	W/W	5.93	4.39	3.73	5.93	4.39	3.73
	COP	BTU/hW	20.00	15.00	12.75	20.00	15.00	12.75
	Power Factor	%	-	92	-	-	92	-
	Indoor Noise (H / L / QLo)	dB-A	44 / 35 / 32			44 / 35 / 32		
		Power Level dB	60 / - / -			60 / - / -		
	Outdoor Noise (H / L / QLo)	dB-A	49 / - / -			49 / - / -		
		Power Level dB	64 / - / -			64 / - / -		
17°F: Rated Capacity (BTU/h) / I. Power (W)			10000 / 1.05k					
5°F: Max. Capacity (BTU/h)			12000 / 2.20					
Max Current (A) / Max Input Power (W)			9.3 / 2.11k					
Starting Current (A)			4.20					
Compressor	Type		Hermetic Motor (Rotary)					
	Motor Type		Brushless (6-poles)					
	Output Power	W	700					

Indoor				Model	CS-XE12WKUAW	
Outdoor				Model	CU-XE12WKUA	
Indoor Fan	Type				Cross-Flow Fan	
	Material				ASG33	
	Motor Type				DC (8-poles)	
	Input Power			W	47.3	
	Output Power			W	30	
	Speed	QLo	Cool	rpm	500	
			Heat	rpm	850	
		Lo	Cool	rpm	660	
			Heat	rpm	930	
		Me	Cool	rpm	960	
			Heat	rpm	1110	
		Hi	Cool	rpm	1270	
			Heat	rpm	1280	
		SHi	Cool	rpm	1320	
			Heat	rpm	1330	
Outdoor Fan	Type				Propeller Fan	
	Material				PP	
	Motor Type				DC (8-poles)	
	Input Power			W	-	
	Output Power			W	40	
	Speed	Hi	Cool	rpm	820	
			Heat	rpm	890	
Min. Circuit Ampacity					15.00	
Max. Overcurrent Protection					20.00	
SEER / HSPF					24.60 / 13.00	
Moisture Removal				L/h (Pt/h)	1.2 (2.5)	
Indoor Airflow		QLo	Cool	m³/min (ft³/min)	4.48 (158)	
			Heat	m³/min (ft³/min)	7.76 (274)	
		Lo	Cool	m³/min (ft³/min)	5.98 (211)	
			Heat	m³/min (ft³/min)	8.51 (300)	
		Me	Cool	m³/min (ft³/min)	8.80 (310)	
			Heat	m³/min (ft³/min)	10.11 (357)	
		Hi	Cool	m³/min (ft³/min)	11.70 (415)	
			Heat	m³/min (ft³/min)	11.80 (415)	
		SHi	Cool	m³/min (ft³/min)	12.17 (430)	
			Heat	m³/min (ft³/min)	12.26 (433)	
Outdoor Airflow		Hi	Cool	m³/min (ft³/min)	32.70 (1155)	32.70 (1155)
			Heat	m³/min (ft³/min)	35.60 (1255)	35.60 (1255)
Refrigerant Cycle		Control Device			Expansion Valve	
		Refrigerant Oil		cm³	FV50S (320)	
		Refrigerant Type		g (oz)	R410A, 1200 (42.4)	

Indoor			Model	CS-XE12WKUAW	
Outdoor			Model	CU-XE12WKUA	
Dimension	Unit	Height (ID / OD)	mm (inch)	295 (11-5/8) / 622 (24-1/2)	
		Width (ID / OD)	mm (inch)	870 (34-9/32) / 824 (32-15/32)	
		Depth (ID / OD)	mm (inch)	230 (9-1/6) / 299 (11-25/32)	
Weight	Net (ID / OD)		kg (lb)	11 (24) / 37 (82)	
Stacking No. (CS / CU / CZ)				12 / 6 /-	
Piping	Pipe Diameter (Liquid / Gas)		mm (inch)	6.35 (1/4) / 12.70 (1/2)	
	Standard Length		m (ft)	7.5 (24.6)	
	Length Range (min - max)		m (ft)	3 (9.8) ~ 20 (65.6)	
	I/D & O/D Height Different		m (ft)	15.0 (49.2)	
	Additional Gas Amount		g/m (oz/ft)	15 (0.2)	
	Length for Additional Gas)		m (ft)	7.5 (24.6)	
Drain Hose	Inner Diameter		mm	16.7	
	Length		mm	650	
Indoor Heat Exchanger	Fin Material			Aluminium (Pre Coat)	
	Fin Type			Slit Fin	
	Row x Stage x FPI			2 x 17 x 21	
	Size (W x H x L)		mm	25.4 x 357 x 636.5	
Outdoor Heat Exchanger	Fin Material			Aluminium (Blue Coat)	
	Fin Type			Corrugated Fin	
	Row x Stage x FPI			2 x 28 x 17	
	Size (W x H x L)		mm	36.4 x 588 x 856.3 : 827.7	
Air Filter	Material			Polypropelene	
	Type			One-touch	
Power Supply				Outdoor	
Power Supply Cord				Nil	
Thermostat				Electronic Control	
Protection Device				Electronic Control	
				Dry Bulb	Wet Bulb
Indoor Operation Range	Cooling		Maximum °F (°C)	89.6 (32)	73.4 (23)
			Minimum °F (°C)	60.8 (16)	51.8 (11)
	Heating		Maximum °F (°C)	86.0 (30)	- / -
			Minimum °F (°C)	60.8 (16)	- / -
Outdoor Operation Range	Cooling		Maximum °F (°C)	114.8 (46)	78.8 (26)
			Minimum °F (°C)	0 / -17.8	- / -
	Heating		Maximum °F (°C)	75.2 (24)	64.4 (18)
			Minimum °F (°C)	-15 / -26	-16 / -26.7

1. Cooling capacities are based on indoor temperature of 80°F (26.7°C) DRY BULB, 67°F (19.4°C) WET BULB and outdoor air temperature of 95°F (35°C) DRY BULB, 75°F (23.8°C) WET BULB.
2. Heating capacities are based on indoor temperature of 70°F (21.1°C) DRY BULB, 60°F (15.6°C) WET BULB and outdoor air temperature of 47°F (8.3°C) DRY BULB, 43°F (6.1°C) WET BULB.
3. 17°F (-8.3°C) Heating Capacity and Input Power measured at 230V, indoor temperature 70°F (21.1°C), outdoor 17/15°F (-8.3/-9.4°C).
4. 5°F (-15°C) Heating Capacity measured at 230V, indoor temperature 70°F (21.1°C), outdoor 5°F (-15°C/-).
5. Specifications are subjected to change without prior notice for further improvement.

Indoor		Model	CS-XE15WKUAW					
Outdoor		**Model**	**CU-XE15WKUA**					
Performance Test Condition			ARI					
Power Supply		Phase, Hz	Single, 60					
		V	208			230		
			Min.	Mid.	Max.	Min.	Mid.	Max.
Cooling	Capacity	kW	0.98	4.30	5.57	0.98	4.30	5.57
		BTU/h	3300	14700	19000	3300	14700	19000
	Running Current	A	-	6.00	-	-	5.40	-
	Input Power	W	250	1.17k	1.90k	250	1.17k	1.90k
	EER / EER Class	W/W	3.92	3.68	2.93	3.92	3.68	2.93
	EER	BTU/hW	13.20	12.55	10.00	13.20	12.55	10.00
	Power Factor	%	-	94	-	-	94	-
	Indoor Noise (H / L / QLo)	dB-A	45 / 37 / 34			45 / 37 / 34		
		Power Level dB	61 / - / -			61 / - / -		
	Outdoor Noise (H / L / QLo)	dB-A	51 / - / -			51 / - / -		
		Power Level dB	66 / - / -			66 / - / -		
Heating	Capacity	kW	0.98	5.04	7.03	0.98	5.04	7.03
		BTU/h	3300	17200	24000	3300	17200	24000
	Running Current	A	-	6.60	-	-	5.80	-
	Input Power	W	200	1.26k	2.65k	200	1.26k	2.65k
	COP / COP Class	W/W	4.90	4.00	2.65	4.90	4.00	2.65
	COP	BTU/hW	16.50	13.65	9.05	16.50	13.65	9.05
	Power Factor	%	-	92	-	-	94	-
	Indoor Noise (H / L / QLo)	dB-A	47 / 37 / 34			47 / 37 / 34		
		Power Level dB	63 / - / -			63 / - / -		
	Outdoor Noise (H / L / QLo)	dB-A	55 / - / -			55 / - / -		
		Power Level dB	70 / - / -			70 / - / -		
17°F: Rated Capacity (BTU/h) / I. Power (W)			11000 / 1.02k					
5°F: Max. Capacity (BTU/h)			17200 / 2.10					
Max Current (A) / Max Input Power (W)			12.5 / 2.82k					
Starting Current (A)			6.60					
Compressor	Type		Hermetic Motor (Rotary)					
	Motor Type		Brushless (4-poles)					
	Output Power	W	900					

Indoor				Model	CS-XE15WKUAW	
Outdoor				Model	CU-XE15WKUA	
Indoor Fan	Type				Cross-Flow Fan	
	Material				ASG33	
	Motor Type				DC (8-poles)	
	Input Power			W	47.3	
	Output Power			W	30	
	Speed	QLo	Cool	rpm	890	
			Heat	rpm	920	
		Lo	Cool	rpm	940	
			Heat	rpm	990	
		Me	Cool	rpm	1140	
			Heat	rpm	1190	
		Hi	Cool	rpm	1320	
			Heat	rpm	1410	
		SHi	Cool	rpm	1370	
			Heat	rpm	1460	
Outdoor Fan	Type				Propeller Fan	
	Material				PP	
	Motor Type				DC (8-poles)	
	Input Power			W	-	
	Output Power			W	60	
	Speed	Hi	Cool	rpm	740	
			Heat	rpm	660	
Min. Circuit Ampacity					20.00	
Max. Overcurrent Protection					25.00	
SEER / HSPF					21.10 / 12.00	
Moisture Removal				L/h (Pt/h)	1.9 (4.0)	
Indoor Airflow		QLo	Cool	m³/min (ft³/min)	8.16 (288)	
			Heat	m³/min (ft³/min)	8.47 (299)	
		Lo	Cool	m³/min (ft³/min)	8.63 (305)	
			Heat	m³/min (ft³/min)	9.13 (322)	
		Me	Cool	m³/min (ft³/min)	10.42 (368)	
			Heat	m³/min (ft³/min)	11.12 (393)	
		Hi	Cool	m³/min (ft³/min)	12.20 (430)	
			Heat	m³/min (ft³/min)	13.10 (460)	
		SHi	Cool	m³/min (ft³/min)	12.67 (447)	
			Heat	m³/min (ft³/min)	13.57 (479)	
Outdoor Airflow		Hi	Cool	m³/min (ft³/min)	43.20 (1525)	43.20 (1525)
			Heat	m³/min (ft³/min)	41.20 (1455)	41.20 (1455)
Refrigerant Cycle		Control Device			Expansion Valve	
		Refrigerant Oil		cm³	FV50S (450)	
		Refrigerant Type		g (oz)	R410A, 1320 (46.6)	

Indoor			Model	CS-XE15WKUAW	
Outdoor			Model	CU-XE15WKUA	
Dimension	Unit	Height (ID / OD)	mm (inch)	295 (11-5/8) / 695 (27-3/8)	
		Width (ID / OD)	mm (inch)	870 (34-9/32) / 875 (34-15/32)	
		Depth (ID / OD)	mm (inch)	230 (9-1/16) / 320 (12-5/8)	
Weight	Net (ID / OD)		kg (lb)	11 (24) / 48 (106)	
Stacking No. (CS / CU / CZ)				12 / 4 / -	
Piping	Pipe Diameter (Liquid / Gas)		mm (inch)	6.35 (1/4) / 12.70 (1/2)	
	Standard Length		m (ft)	7.5 (24.6)	
	Length Range (min - max)		m (ft)	3 (9.8) ~ 20 (65.6)	
	I/D & O/D Height Different		m (ft)	15 (49.2)	
	Additional Gas Amount		g/m (oz/ft)	20 (0.2)	
	Length for Additional Gas)		m (ft)	7.5 (24.6)	
Drain Hose	Inner Diameter		mm	16.7	
	Length		mm	650	
Indoor Heat Exchanger	Fin Material			Aluminium (Pre Coat)	
	Fin Type			Slit Fin	
	Row x Stage x FPI			2 x 17 x 21	
	Size (W x H x L)		mm	25.4 x 357 x 636.5	
Outdoor Heat Exchanger	Fin Material			Aluminium (Blue Coat)	
	Fin Type			Corrugated Fin	
	Row x Stage x FPI			2 x 31 x 19	
	Size (W x H x L)		mm	36.4 x 651 x 854.5 : 824.5	
Air Filter	Material			Polypropelene	
	Type			One-touch	
Power Supply				Outdoor	
Power Supply Cord				Nil	
Thermostat				Electronic Control	
Protection Device				Electronic Control	
				Dry Bulb	Wet Bulb
Indoor Operation Range	Cooling		Maximum °F (°C)	89.6 (32)	73.4 (23)
			Minimum °F (°C)	60.8 (16)	51.8 (11)
	Heating		Maximum °F (°C)	86.0 (30)	- / -
			Minimum °F (°C)	60.8 (16)	- / -
Outdoor Operation Range	Cooling		Maximum °F (°C)	114.8 (46)	78.8 (26)
			Minimum °F (°C)	0 / -17.8	- / -
	Heating		Maximum °F (°C)	75.2 (24)	64.4 (18)
			Minimum °F (°C)	-15 / -26	-16 / -26.7

1. Cooling capacities are based on indoor temperature of 80°F (26.7°C) DRY BULB, 67°F (19.4°C) WET BULB and outdoor air temperature of 95°F (35°C) DRY BULB, 75°F (23.8°C) WET BULB.
2. Heating capacities are based on indoor temperature of 70°F (21.1°C) DRY BULB, 60°F (15.6°C) WET BULB and outdoor air temperature of 47°F (8.3°C) DRY BULB, 43°F (6.1°C) WET BULB.
3. 17°F (-8.3°C) Heating Capacity and Input Power measured at 230V, indoor temperature 70°F (21.1°C), outdoor 17/15°F (-8.3/-9.4°C).
4. 5°F (-15°C) Heating Capacity measured at 230V, indoor temperature 70°F (21.1°C), outdoor 5°F (-15°C/-).
5. Specifications are subjected to change without prior notice for further improvement.

Indoor		Model	CS-XE18WKUAW					
Outdoor		Model	CU-XE18WKUA					
Performance Test Condition			ARI					
Power Supply		Phase, Hz	Single, 60					
		V	208			230		
			Min.	Mid.	Max.	Min.	Mid.	Max.
Cooling	Capacity	kW	1.70	5.04	5.80	1.70	5.04	5.80
		BTU/h	5800	17200	19800	5800	17200	19800
	Running Current	A	-	6.90	-	-	6.20	-
	Input Power	W	430	1.30k	1.60k	430	1.30k	1.60k
	EER / EER Class	W/W	3.95	3.88	3.63	3.95	3.88	3.63
	EER	BTU/hW	13.45	13.20	12.35	13.45	13.20	12.35
	Power Factor	%	-	91	-	-	91	-
	Indoor Noise (H / L / QLo)	dB-A	47 / 39 / 36			47 / 39 / 36		
		Power Level dB	63 / - / -			63 / - / -		
	Outdoor Noise (H / L / QLo)	dB-A	52 / - / -			52 / - / -		
		Power Level dB	66 / - / -			66 / - / -		
Heating	Capacity	kW	1.70	5.97	8.79	1.70	5.97	8.79
		BTU/h	5800	20400	30000	5800	20400	30000
	Running Current	A	-	8.70	-	-	7.70	-
	Input Power	W	380	1.63k	2.80k	380	1.63k	2.80k
	COP / COP Class	W/W	4.47	3.66	3.14	4.47	3.66	3.14
	COP	BTU/hW	15.25	12.50	10.70	15.25	12.50	10.70
	Power Factor	%	-	90	-	-	92	-
	Indoor Noise (H / L / QLo)	dB-A	48 / 39 / 36			48 / 39 / 36		
		Power Level dB	64 / - / -			64 / - / -		
	Outdoor Noise (H / L / QLo)	dB-A	54 / - / -			54 / - / -		
		Power Level dB	68 / - / -			68 / - / -		
17°F: Rated Capacity (BTU/h) / I. Power (W)			14000 / 1.40k					
5°F: Max. Capacity (BTU/h)			20400 / 2.30					
Max Current (A) / Max Input Power (W)			11.9 / 2.61k					
Starting Current (A)			8.70					
Compressor	Type		Hermetic Motor (Rotary)					
	Motor Type		Brushless (4-poles)					
	Output Power	W	1.70k					

Indoor				Model	CS-XE18WKUAW	
Outdoor				Model	CU-XE18WKUA	
Indoor Fan	Type				Cross-Flow Fan	
	Material				ASG33	
	Motor Type				DC (8-poles)	
	Input Power			W	94.8	
	Output Power			W	30	
	Speed	QLo	Cool	rpm	900	
			Heat	rpm	900	
		Lo	Cool	rpm	980	
			Heat	rpm	980	
		Me	Cool	rpm	1120	
			Heat	rpm	1160	
		Hi	Cool	rpm	1260	
			Heat	rpm	1330	
		SHi	Cool	rpm	1310	
			Heat	rpm	1380	
Outdoor Fan	Type				Propeller Fan	
	Material				PP	
	Motor Type				DC (8-poles)	
	Input Power			W	-	
	Output Power			W	60	
	Speed	Hi	Cool	rpm	640	
			Heat	rpm	580	
Min. Circuit Ampacity					20.00	
Max. Overcurrent Protection					25.00	
SEER / HSPF					21.00 / 12.00	
Moisture Removal				L/h (Pt/h)	1.7 (3.6)	
Indoor Airflow		QLo	Cool	m³/min (ft³/min)	10.89 (384)	
			Heat	m³/min (ft³/min)	10.92 (386)	
		Lo	Cool	m³/min (ft³/min)	12.01 (424)	
			Heat	m³/min (ft³/min)	12.03 (425)	
		Me	Cool	m³/min (ft³/min)	13.95 (493)	
			Heat	m³/min (ft³/min)	14.40 (508)	
		Hi	Cool	m³/min (ft³/min)	15.90 (560)	
			Heat	m³/min (ft³/min)	16.90 (595)	
		SHi	Cool	m³/min (ft³/min)	16.59 (586)	
			Heat	m³/min (ft³/min)	17.60 (621)	
Outdoor Airflow		Hi	Cool	m³/min (ft³/min)	54.5 (1925)	54.5 (1925)
			Heat	m³/min (ft³/min)	54.5 (1925)	54.5 (1925)
Refrigerant Cycle		Control Device			Expansion Valve	
		Refrigerant Oil		cm³	FV50S (800)	
		Refrigerant Type		g (oz)	R410A, 1.85k (65.3)	

Indoor			Model	CS-XE18WKUAW	
Outdoor			Model	CU-XE18WKUA	
Dimension	Unit	Height (ID / OD)	mm (inch)	302 (11-29/32) / 795 (31-5/16)	
		Width (ID / OD)	mm (inch)	1102 (43-13/32) / 875 (34-15/32)	
		Depth (ID / OD)	mm (inch)	244 (9-5/8) / 320 (12-5/8)	
Weight	Net (ID / OD)		kg (lb)	15 (33) / 60 (132)	
Stacking No. (CS / CU / CZ)				12 / 4 / -	
Piping	Pipe Diameter (Liquid / Gas)		mm (inch)	6.35 (1/4) / 12.70 (1/2)	
	Standard Length		m (ft)	7.5 (24.6)	
	Length Range (min - max)		m (ft)	3 (9.8) ~ 30.5 (100.0)	
	I/D & O/D Height Different		m (ft)	15 (49.2)	
	Additional Gas Amount		g/m (oz/ft)	20 (0.2)	
	Length for Additional Gas)		m (ft)	10 (32.8)	
Drain Hose	Inner Diameter		mm	16.7	
	Length		mm	650	
Indoor Heat Exchanger	Fin Material			Aluminium (Pre Coat)	
	Fin Type			Slit Fin	
	Row x Stage x FPI			2 x 17 x 21	
	Size (W x H x L)		mm	836.5 x 357 x 25.4	
Outdoor Heat Exchanger	Fin Material			Aluminium (Blue Coat)	
	Fin Type			Corrugated Fin	
	Row x Stage x FPI			2 x 36 x 19	
	Size (W x H x L)		mm	36.4 x 756 x 868.6: 897	
Air Filter	Material			Polypropelene	
	Type			One-touch	
Power Supply				Outdoor	
Power Supply Cord				Nil	
Thermostat				Electronic Control	
Protection Device				Electronic Control	
				Dry Bulb	Wet Bulb
Indoor Operation Range	Cooling		Maximum °F (°C)	89.6 (32)	73.4 (23)
			Minimum °F (°C)	60.8 (16)	51.8 (11)
	Heating		Maximum °F (°C)	86.0 (30)	-
			Minimum °F (°C)	60.8 (16)	-
Outdoor Operation Range	Cooling		Maximum °F (°C)	114.8 (46)	78.8 (26)
			Minimum °F (°C)	0 (-17.8)	-
	Heating		Maximum °F (°C)	75.2 (24)	64.4 (18)
			Minimum °F (°C)	-15 (-26)	-16 (-26.7)

1. Cooling capacities are based on indoor temperature of 80°F (26.7°C) DRY BULB, 67°F (19.4°C) WET BULB and outdoor air temperature of 95°F (35°C) DRY BULB, 75°F (23.8°C) WET BULB.
2. Heating capacities are based on indoor temperature of 70°F (21.1°C) DRY BULB, 60°F (15.6°C) WET BULB and outdoor air temperature of 47°F (8.3°C) DRY BULB, 43°F (6.1°C) WET BULB.
3. 17°F (-8.3°C) Heating Capacity and Input Power measured at 230V, indoor temperature 70°F (21.1°C), outdoor 17/15°F (-8.3/-9.4°C).
4. 5°F (-15°C) Heating Capacity measured at 230V, indoor temperature 70°F (21.1°C), outdoor 5°F (-15°C/-).
5. Specifications are subjected to change without prior notice for further improvement.

Indoor		Model	CS-XE24WKUAW					
Outdoor		**Model**	**CU-XE24WKUA**					
Performance Test Condition			ARI					
Power Supply		Phase, Hz	Single, 60					
		V	208			230		
			Min.	Mid.	Max.	Min.	Mid.	Max.
Cooling	Capacity	kW	1.70	7.02	8.00	1.70	7.02	8.00
		BTU/h	5800	24000	27200	5800	24000	27200
	Running Current	A	-	11.10	-	-	10.10	-
	Input Power	W	380	2.20k	2.52k	380	2.20k	2.52k
	EER	W/W	4.47	3.19	3.17	4.47	3.19	3.17
		BTU/hW	15.25	10.90	10.75	15.25	10.90	10.75
	Power Factor	%	-	95	-	-	95	-
	Indoor Noise (H / L / QLo)	dB-A	49 / 40 / 37			49 / 40 / 37		
		Power Level dB	65 / - / -			65 / - / -		
	Outdoor Noise (H / L / QLo)	dB-A	53 / - / -			53 / - / -		
		Power Level dB	67 / - / -			67 / - / -		
Heating	Capacity	kW	1.70	8.46	9.90	1.70	8.46	9.90
		BTU/h	5800	28800	33800	5800	28800	33800
	Running Current	A	-	12.80	-	-	11.50	-
	Input Power	W	380	2.52k	3.00k	380	2.52k	3.00k
	COP	W/W	4.47	3.36	3.30	4.47	3.36	3.30
		BTU/hW	15.25	11.40	11.25	15.25	11.40	11.25
	Power Factor	%	-	95	-	-	95	-
	Indoor Noise (H / L / QLo)	dB-A	49 / 40 / 37			49 / 40 / 37		
		Power Level dB	65 / - / -			65 / - / -		
	Outdoor Noise (H / L / QLo)	dB-A	55 / - / -			55 / - / -		
		Power Level dB	69 / - / -			69 / - / -		
17°F: Rated Capacity (BTU/h) / I. Power (W)			18500 / 2.05k					
5°F: Max. Capacity (BTU/h)			25200 / 2.07					
Max Current (A) / Max Input Power (W)			15.6 / 3.44k					
Starting Current (A)			12.80					
Compressor	Type		Hermetic Motor (Rotary)					
	Motor Type		Brushless (4-poles)					
	Output Power	W	1.70k					

Indoor				Model	CS-XE24WKUAW	
Outdoor				Model	CU-XE24WKUA	
Indoor Fan	Type				Cross-Flow Fan	
	Material				ASG33	
	Motor Type				DC (8-poles)	
	Input Power			W	94.8	
	Output Power			W	30	
	Speed	QLo	Cool	rpm	930	
			Heat	rpm	930	
		Lo	Cool	rpm	1000	
			Heat	rpm	1050	
		Me	Cool	rpm	1180	
			Heat	rpm	1250	
		Hi	Cool	rpm	1350	
			Heat	rpm	1450	
		SHi	Cool	rpm	1400	
			Heat	rpm	1500	
Outdoor Fan	Type				Propeller Fan	
	Material				PP	
	Motor Type				DC (8-poles)	
	Input Power			W	-	
	Output Power			W	60	
	Speed	Hi	Cool	rpm	760	
			Heat	rpm	710	
Min. Circuit Ampacity					25.00	
Max. Overcurrent Protection					30.00	
SEER / HSPF					20.00 / 10.60	
Moisture Removal				L/h (Pt/h)	3.6 (7.6)	
Indoor Airflow		QLo	Cool	m³/min (ft³/min)	11.28 (398)	
			Heat	m³/min (ft³/min)	10.86 (383)	
		Lo	Cool	m³/min (ft³/min)	12.25 (433)	
			Heat	m³/min (ft³/min)	12.46 (440)	
		Me	Cool	m³/min (ft³/min)	14.61 (516)	
			Heat	m³/min (ft³/min)	15.13 (534)	
		Hi	Cool	m³/min (ft³/min)	17.10 (605)	
			Heat	m³/min (ft³/min)	17.8 (630)	
		SHi	Cool	m³/min (ft³/min)	17.79 (628)	
			Heat	m³/min (ft³/min)	18.47 (652)	
Outdoor Airflow		Hi	Cool	m³/min (ft³/min)	54.90 (1940)	54.90 (1940)
			Heat	m³/min (ft³/min)	56.5 (1995)	56.5 (1995)
Refrigerant Cycle		Control Device			Expansion Valve	
		Refrigerant Oil		cm³	FV50S (800)	
		Refrigerant Type		g (oz)	R410A, 1.85k (65.3)	

Indoor			Model	CS-XE24WKUAW	
Outdoor			**Model**	**CU-XE24WKUA**	
Dimension	Unit	Height (ID / OD)	mm (inch)	302 (11-29/32) / 795 (31-5/16)	
		Width (ID / OD)	mm (inch)	1102 (43-13/32) / 875 (34-15/32)	
		Depth (ID / OD)	mm (inch)	244 (9-5/8) / 320 (12-5/8)	
Weight	Net (ID / OD)		kg (lb)	15 (33) / 60 (132)	
Stacking No. (CS / CU / CZ)				12 / 4 / -	
Piping	Pipe Diameter (Liquid / Gas)		mm (inch)	6.35 (1/4) / 15.88 (5/8)	
	Standard Length		m (ft)	7.5 (24.6)	
	Length Range (min - max)		m (ft)	3 (9.8) ~ 30.5 (100.0)	
	I/D & O/D Height Different		m (ft)	15 (49.2)	
	Additional Gas Amount		g/m (oz/ft)	20 (0.2)	
	Length for Additional Gas)		m (ft)	10 (32.8)	
Drain Hose	Inner Diameter		mm	16.7	
	Length		mm	650	
Indoor Heat Exchanger	Fin Material			Aluminium (Pre Coat)	
	Fin Type			Slit Fin	
	Row x Stage x FPI			2 x 17 x 21	
	Size (W x H x L)		mm	836.5 x 357 x 25.4	
Outdoor Heat Exchanger	Fin Material			Aluminium (Blue Coat)	
	Fin Type			Corrugated Fin	
	Row x Stage x FPI			2 x 36 x 19	
	Size (W x H x L)		mm	36.4 x 756 x 868.6: 897	
Air Filter	Material			Polypropelene	
	Type			One-touch	
Power Supply				Outdoor	
Power Supply Cord				Nil	
Thermostat				Electronic Control	
Protection Device				Electronic Control	
				Dry Bulb	Wet Bulb
Indoor Operation Range	Cooling		Maximum °F (°C)	89.6 (32)	73.4 (23)
			Minimum °F (°C)	60.8 (16)	51.8 (11)
	Heating		Maximum °F (°C)	86.0 (30)	-
			Minimum °F (°C)	60.8 (16)	-
Outdoor Operation Range	Cooling		Maximum °F (°C)	114.8 (46)	78.8 (26)
			Minimum °F (°C)	0 (-17.8)	-
	Heating		Maximum °F (°C)	75.2 (24)	64.4 (18)
			Minimum °F (°C)	-15 (-26)	-16 (-26.7)

1. Cooling capacities are based on indoor temperature of 80°F (26.7°C) DRY BULB, 67°F (19.4°C) WET BULB and outdoor air temperature of 95°F (35°C) DRY BULB, 75°F (23.8°C) WET BULB.
2. Heating capacities are based on indoor temperature of 70°F (21.1°C) DRY BULB, 60°F (15.6°C) WET BULB and outdoor air temperature of 47°F (8.3°C) DRY BULB, 43°F (6.1°C) WET BULB.
3. 17°F (-8.3°C) Heating Capacity and Input Power measured at 230V, indoor temperature 70°F (21.1°C), outdoor 17/15°F (-8.3/-9.4°C).
4. 5°F (-15°C) Heating Capacity measured at 230V, indoor temperature 70°F (21.1°C), outdoor 5°F (-15°C/-).
5. Specifications are subjected to change without prior notice for further improvement.

3. Features

- **Inverter Technology**
  - Wider output power range
  - Energy saving
  - Quick Cooling
  - Quick Heating
  - More precise temperature control

- **Environment Protection**
  - Non-ozone depletion substances refrigerant (R410A)

- **Long Installation Piping**
  - Long piping up to 65.6ft (20 meters) for XE9~15WKUA and 100ft (30.5 meters) for XE18~24WKUA during single split connection only

- **Easy to use remote control**

- **Quality Improvement**
  - Random auto restart after power failure for safety restart operation
  - Gas leakage protection
  - Prevent compressor reverse cycle
  - Inner protector to protect compressor
  - Noise prevention during soft dry operation

- **Operation Improvement**
  - Quiet mode to reduce the indoor unit operating sound
  - Powerful mode to reach the desired room temperature quickly
  - 24-hour timer setting
  - RFP (Room Freeze Protection) operation is designed to circulate the air in High mode for monitoring the temperature. Used in spaces that are unoccupied during the winter, for the purpose of protecting any equipment or appliances which may be destroyed as a result of freezing temperature.
  - nanoe™ X operation provides clean air, moisturizes your skin and hair, deodorizes odours in the room.

- **Serviceability Improvement**
  - Activation and Deactivation Method of Cooling Only Mode
  - Breakdown Self Diagnosis function

4. Location of Controls and Components

4.1 Indoor Unit

4.1.1 CS-XE9WKUAW CS-XE12WKUAW CS-XE15WKUAW

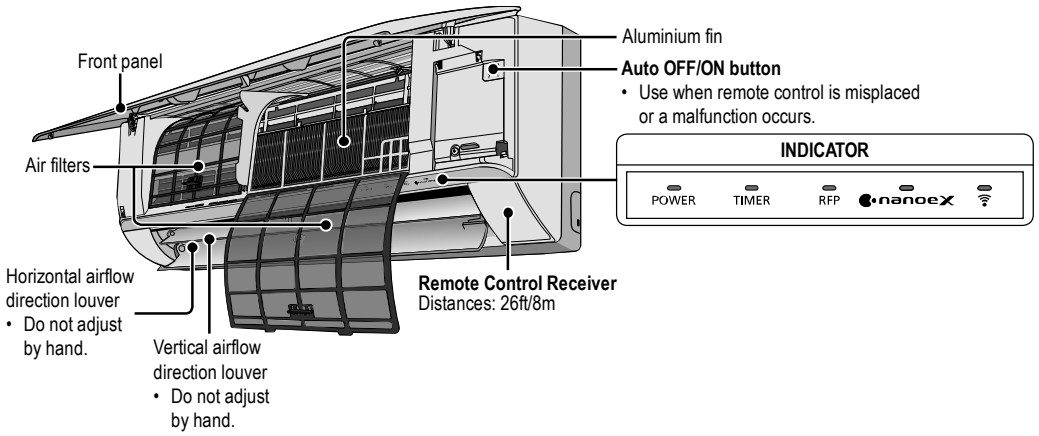

4.1.2 CS-XE18WKUAW CS-XE24WKUAW

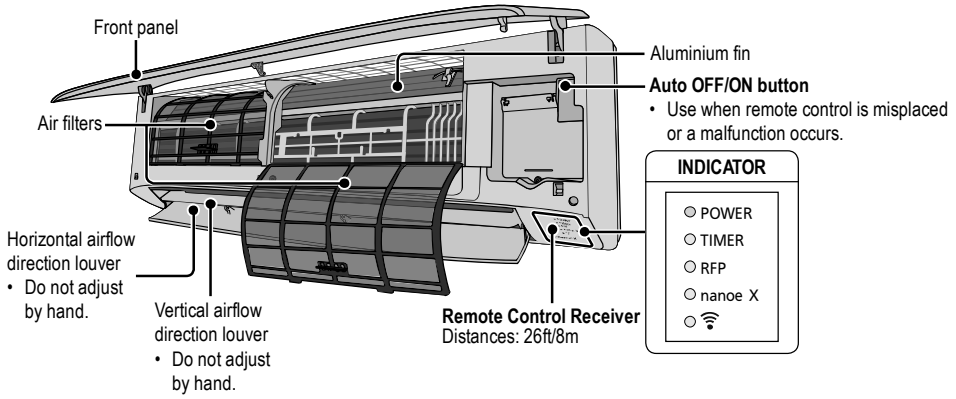

4.2 Outdoor Unit

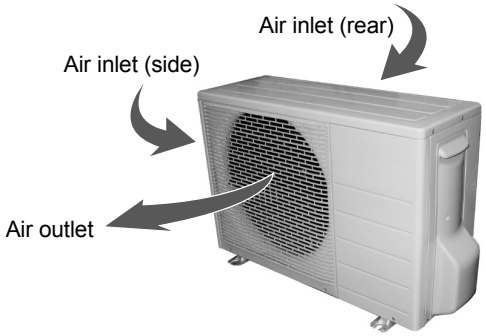

4.3 Remote Control

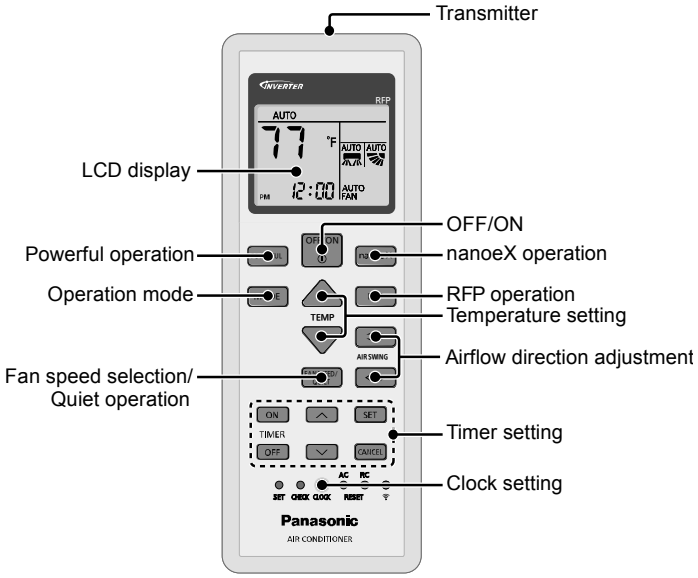

5. Dimensions

5.1 Indoor Unit

5.1.1 CS-XE9WKUAW CS-XE12WKUAW CS-XE15WKUAW

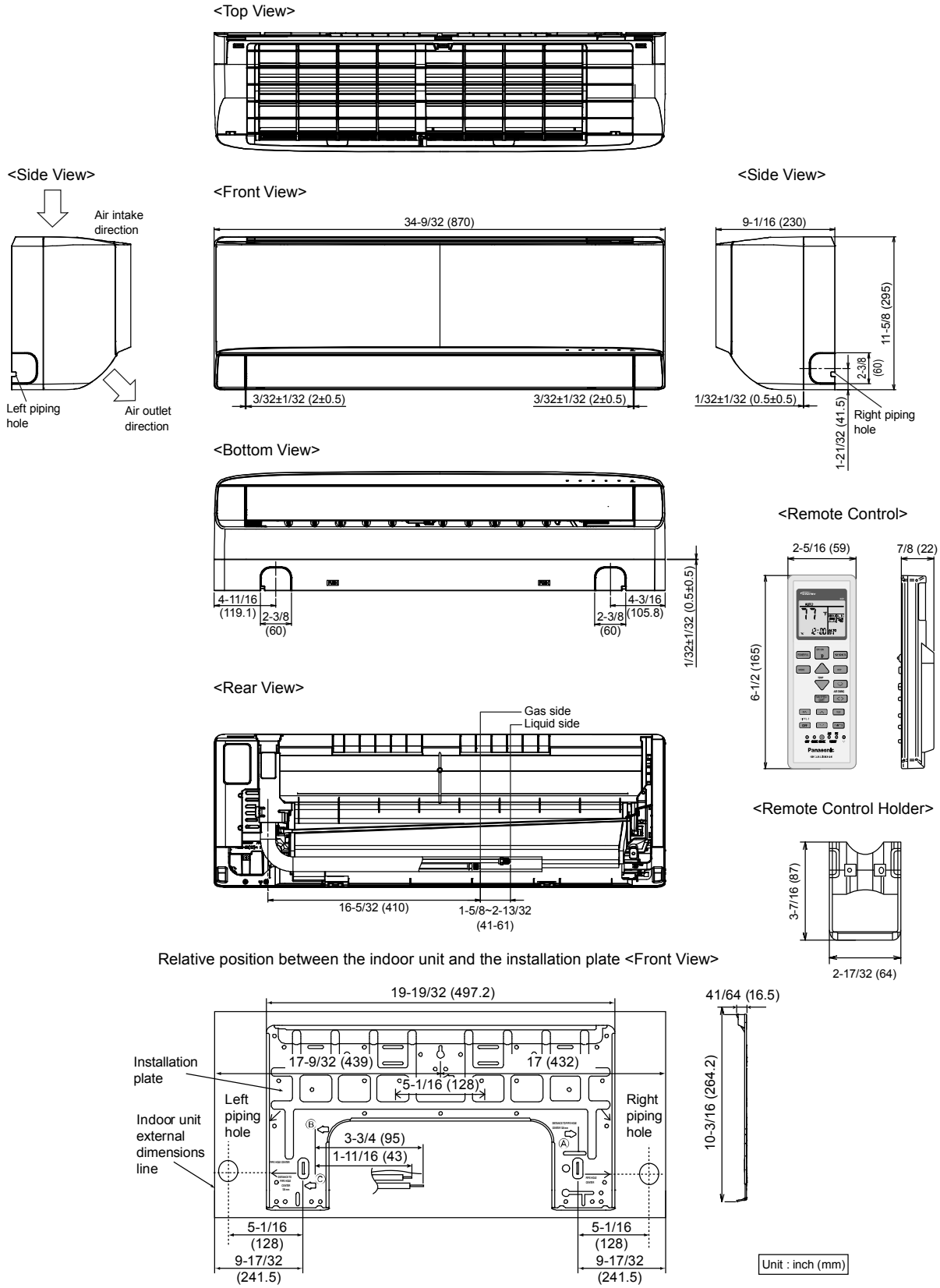

5.1.2 CS-XE18WKUAW CS-XE24WKUAW

<Top View>

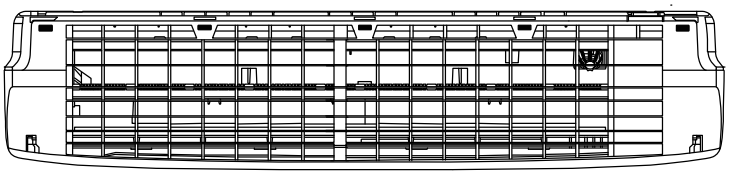

<Side View>

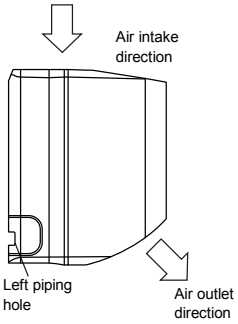

<Front View>



<Side View>

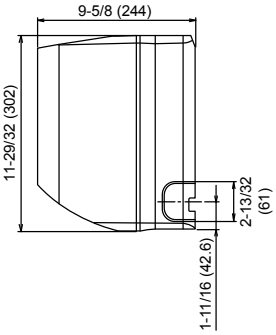

<Bottom View>

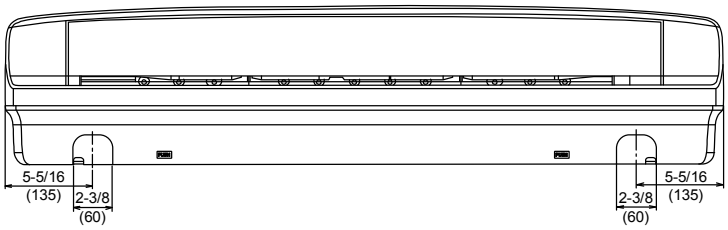

<Remote Control>

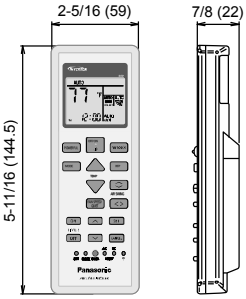

<Rear View>

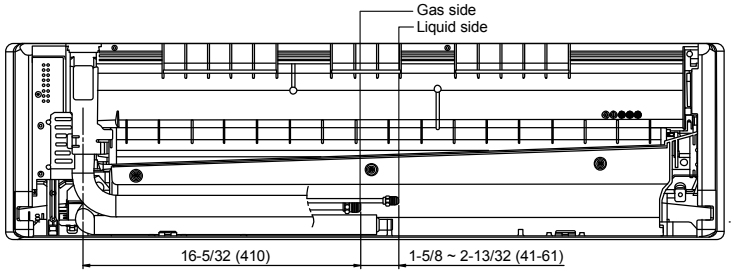

<Remote Control Holder>

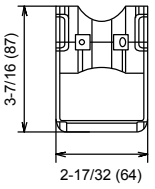

Relative position between the indoor unit and the installation plate <Front View>

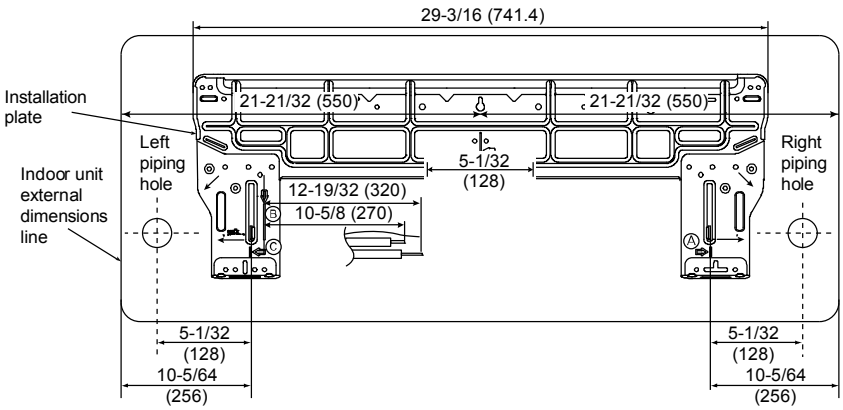



Unit : inch (mm)

5.2 Outdoor Unit

5.2.1 CU-XE9WKUA CU-XE12WKUA

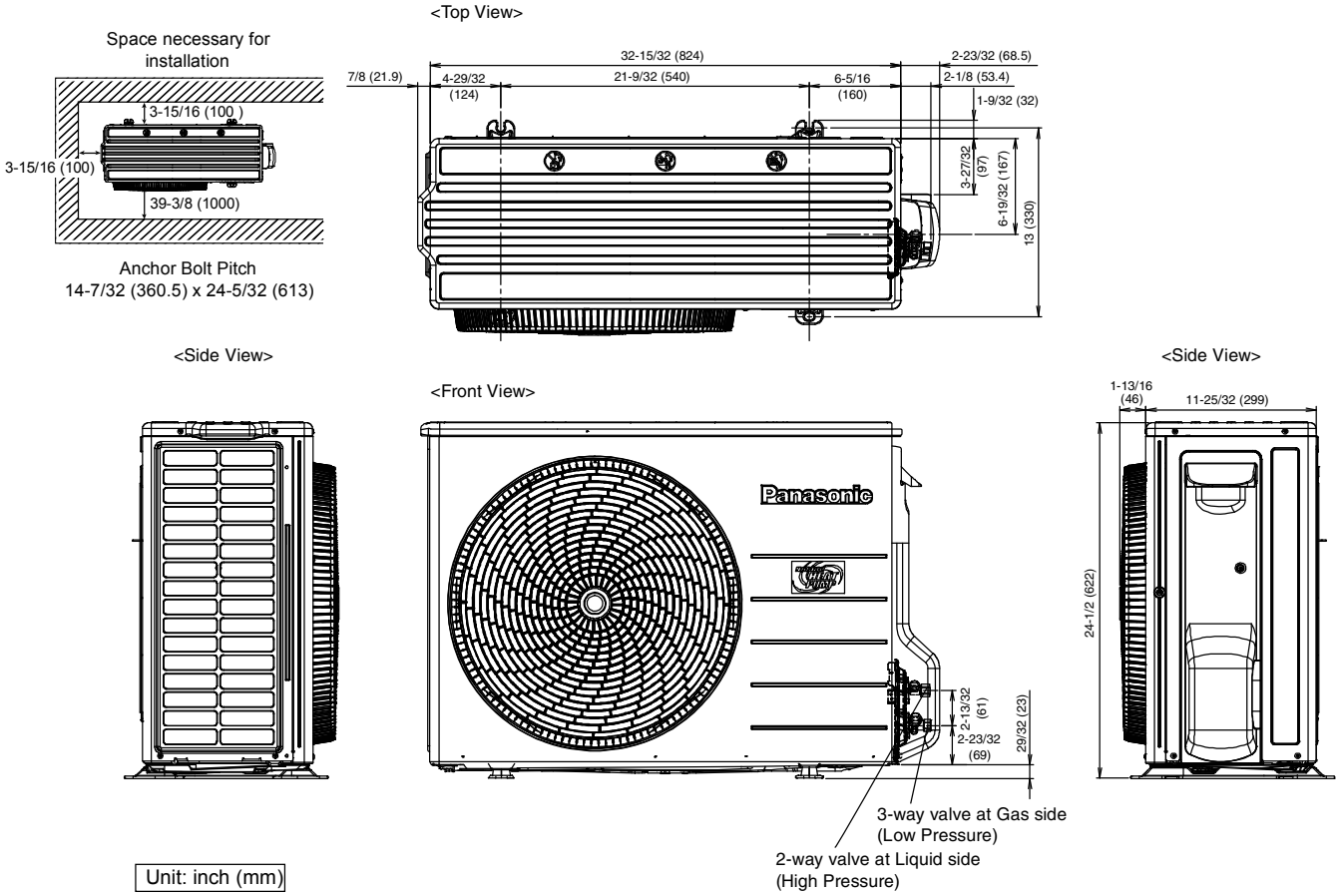

5.2.2 CU-XE15WKUA

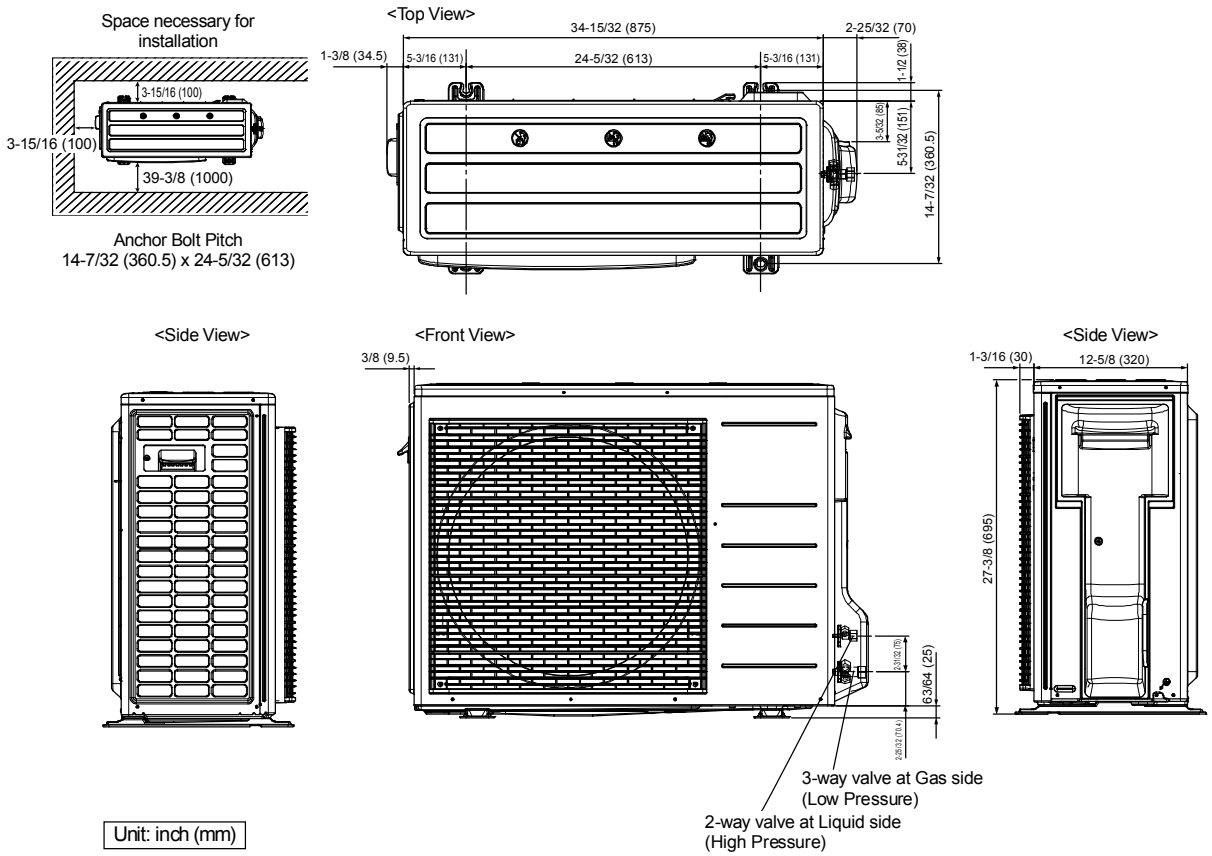

5.2.3 CU-XE18WKUA CU-XE24WKUA

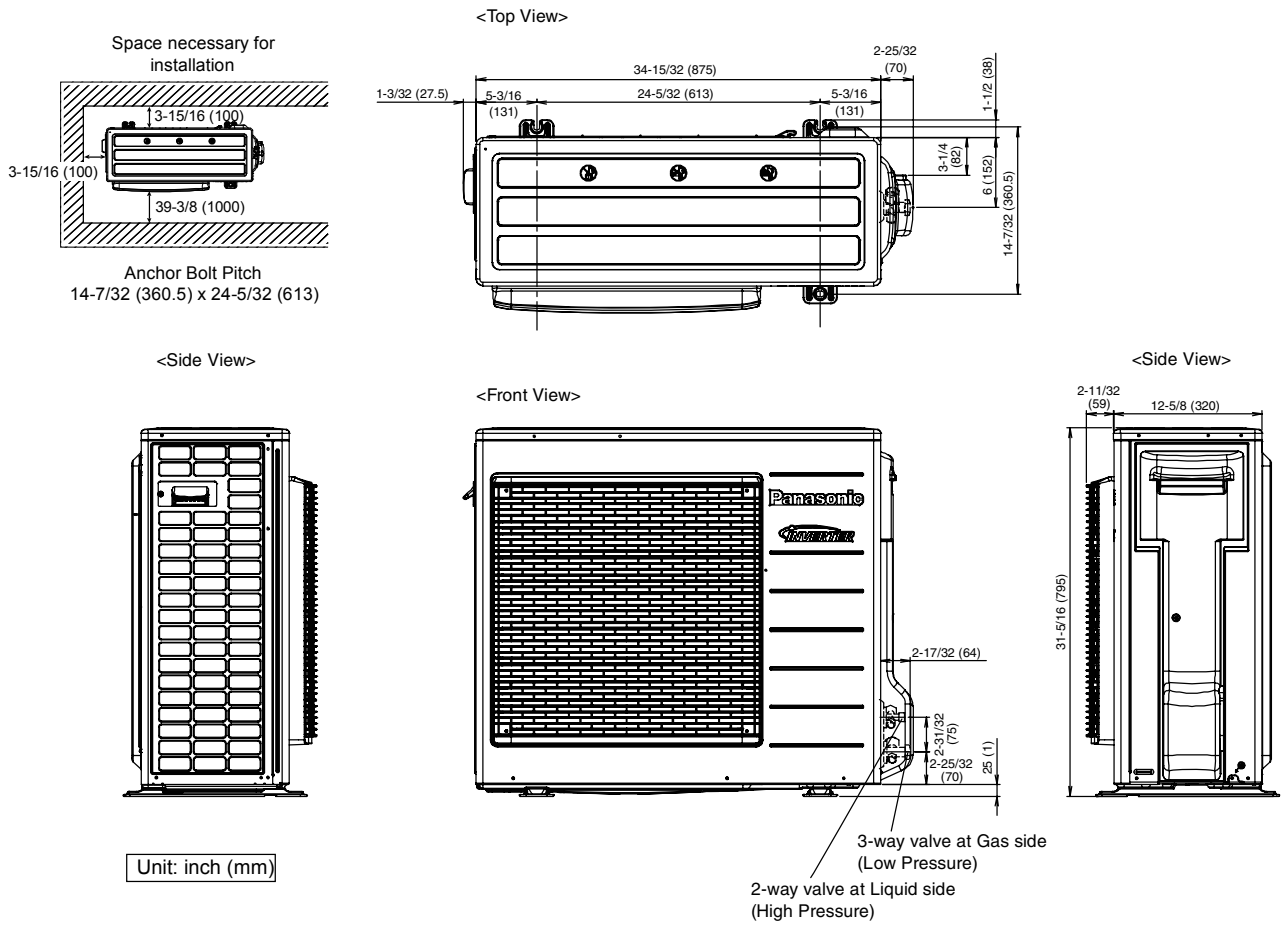

6. Refrigeration Cycle Diagram

6.1 CS-XE9WKUAW CU-XE9WKUA CS-XE12WKUAW CU-XE12WKUA

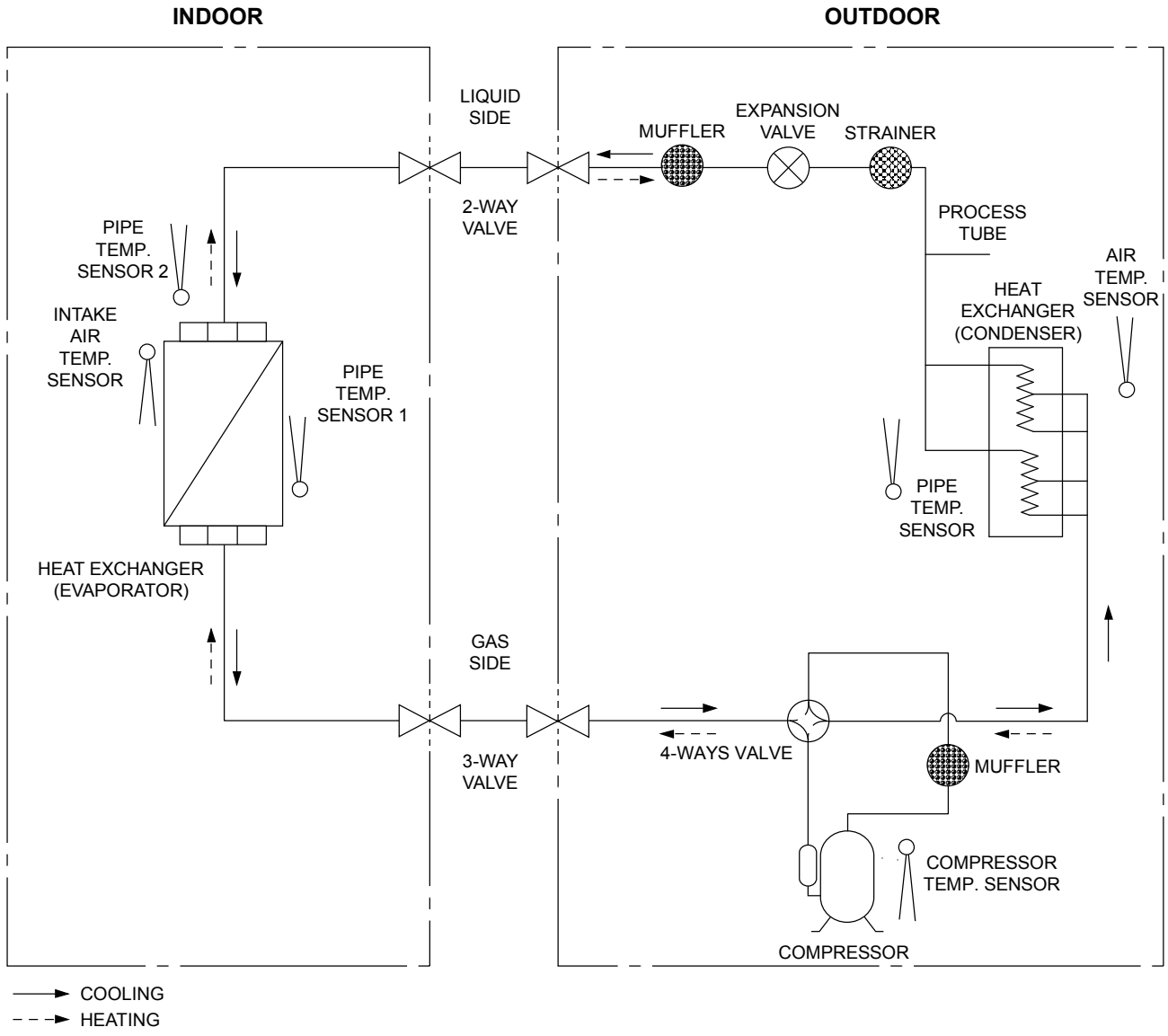

6.2 CS-XE15WKUAW CU-XE15WKUA

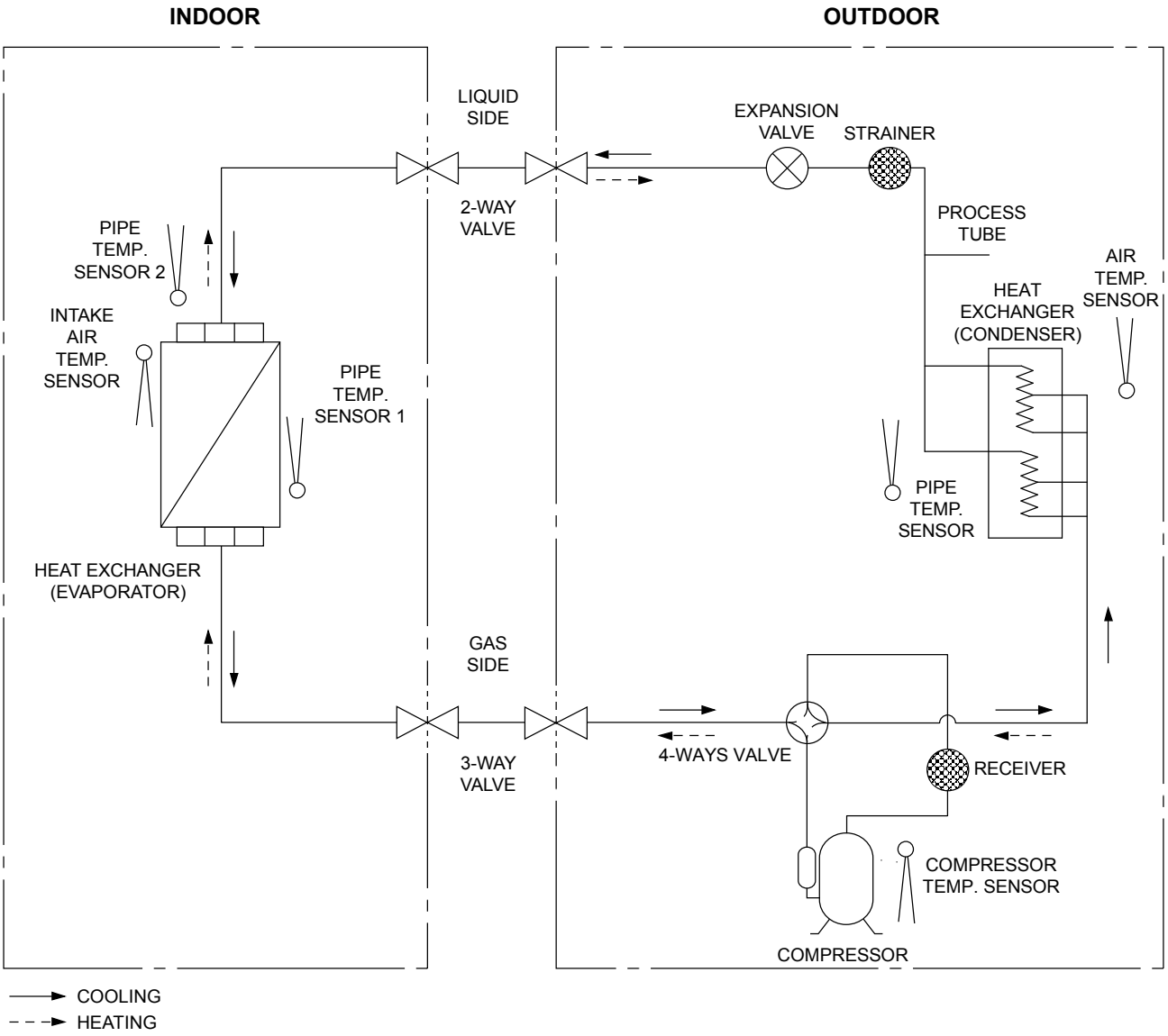

6.3 CS-XE18WKUAW CU-XE18WKUA CS-XE24WKUAW CU-XE24WKUA

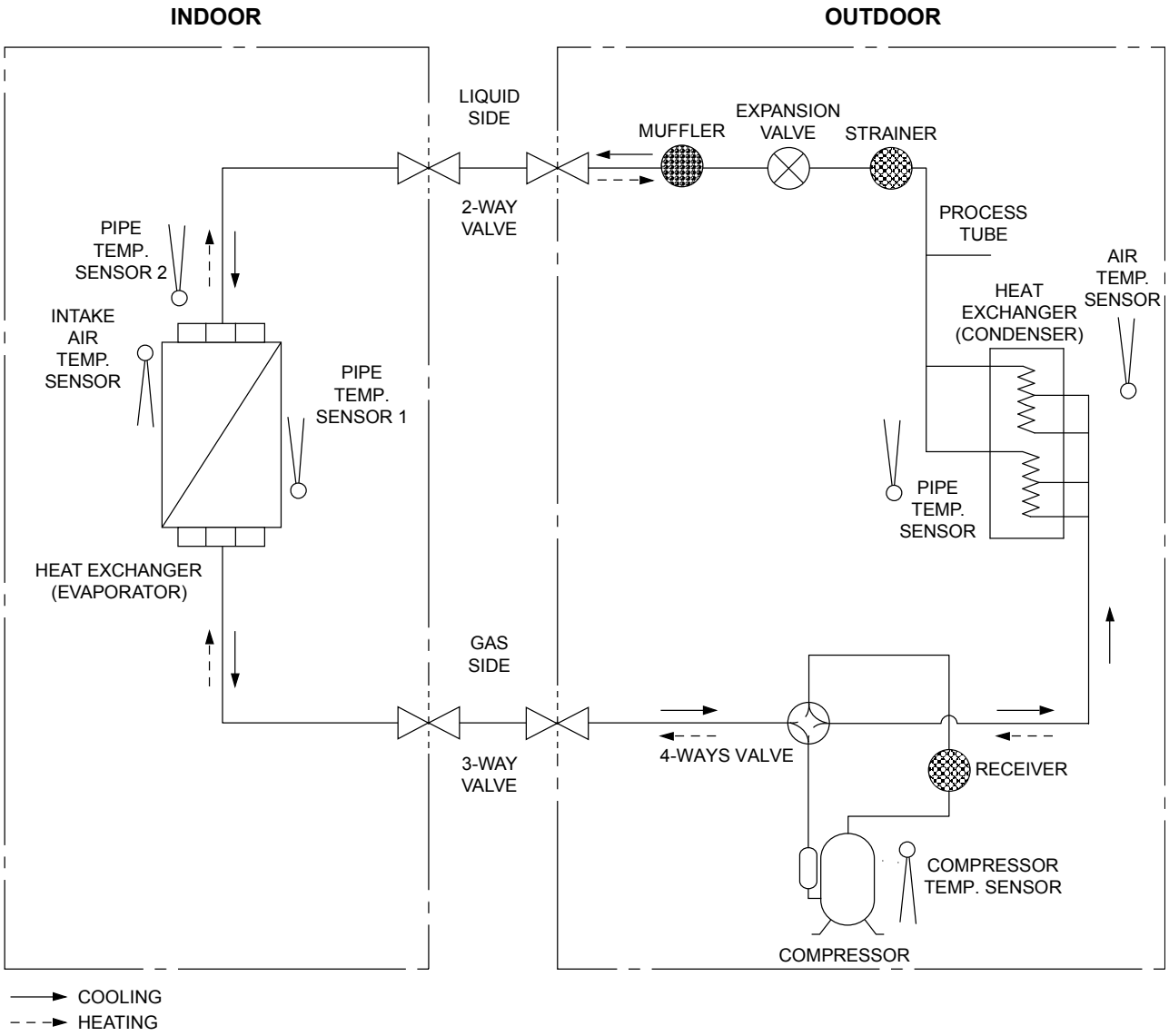

7. Block Diagram

7.1 CS-XE9WKUAW CU-XE9WKUA CS-XE12WKUAW CU-XE12WKUA

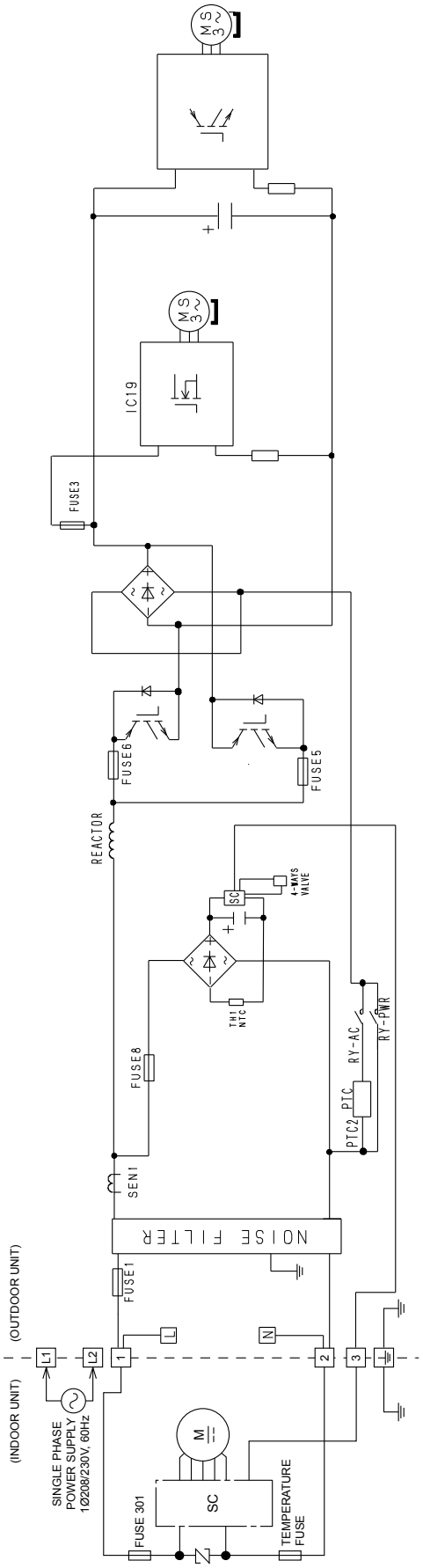

7.2 CS-XE15WKUAW CU-XE15WKUA CS-XE18WKUAW CU-XE18WKUA CS-XE24WKUAW CU-XE24WKUA

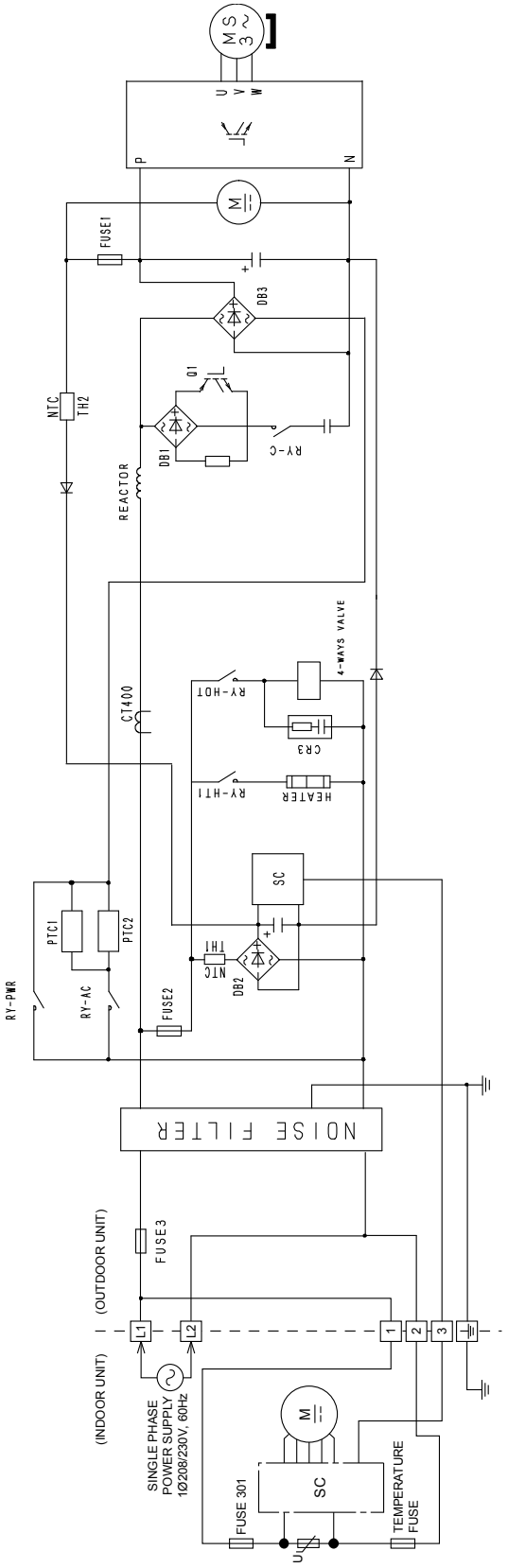

8. Wiring Connection Diagram

8.1 Indoor Unit

8.1.1 CS-XE9WKUAW CS-XE12WKUAW CS-XE15WKUAW

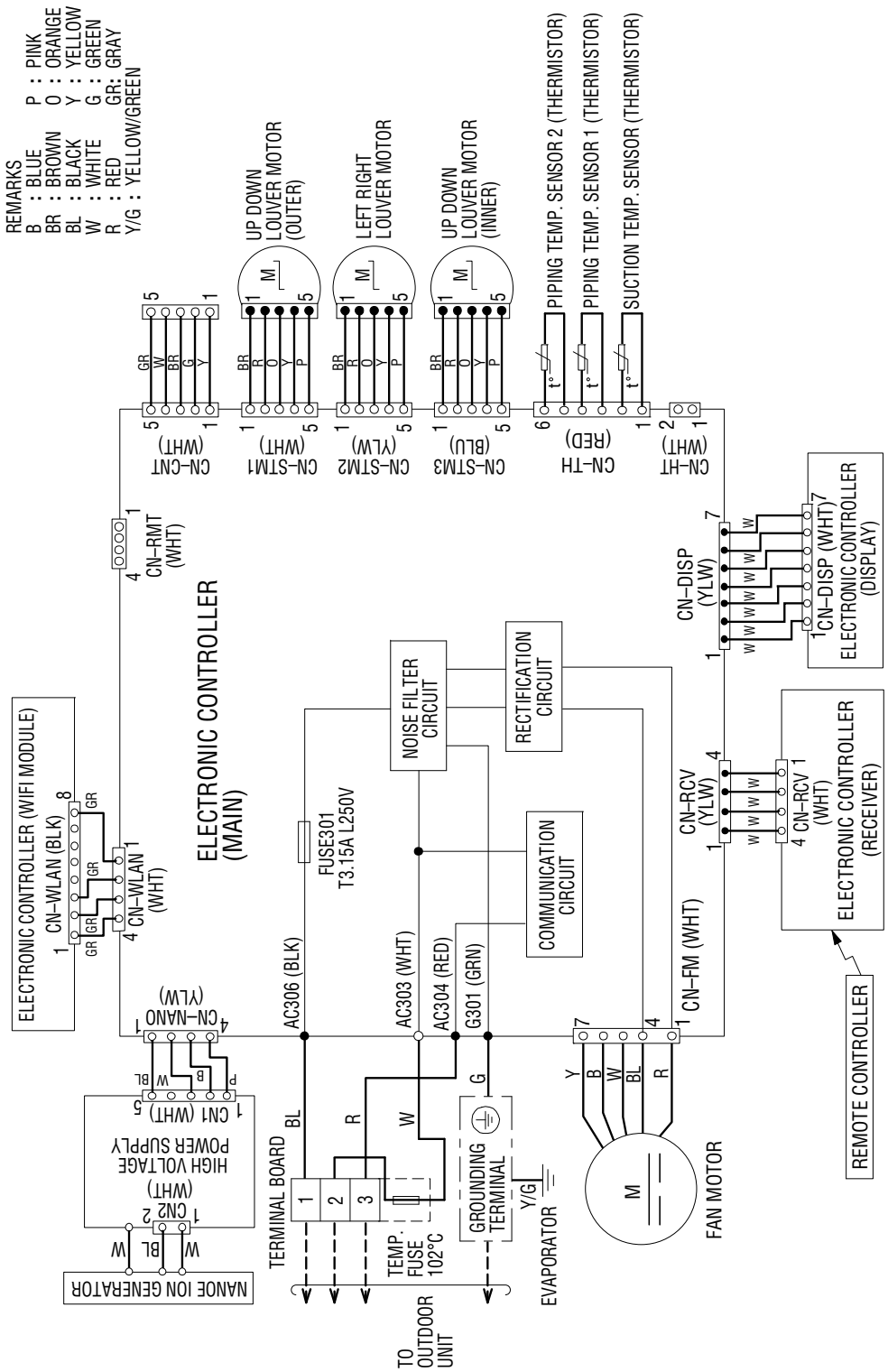

8.1.2 CS-XE18WKUAW CS-XE24WKUAW

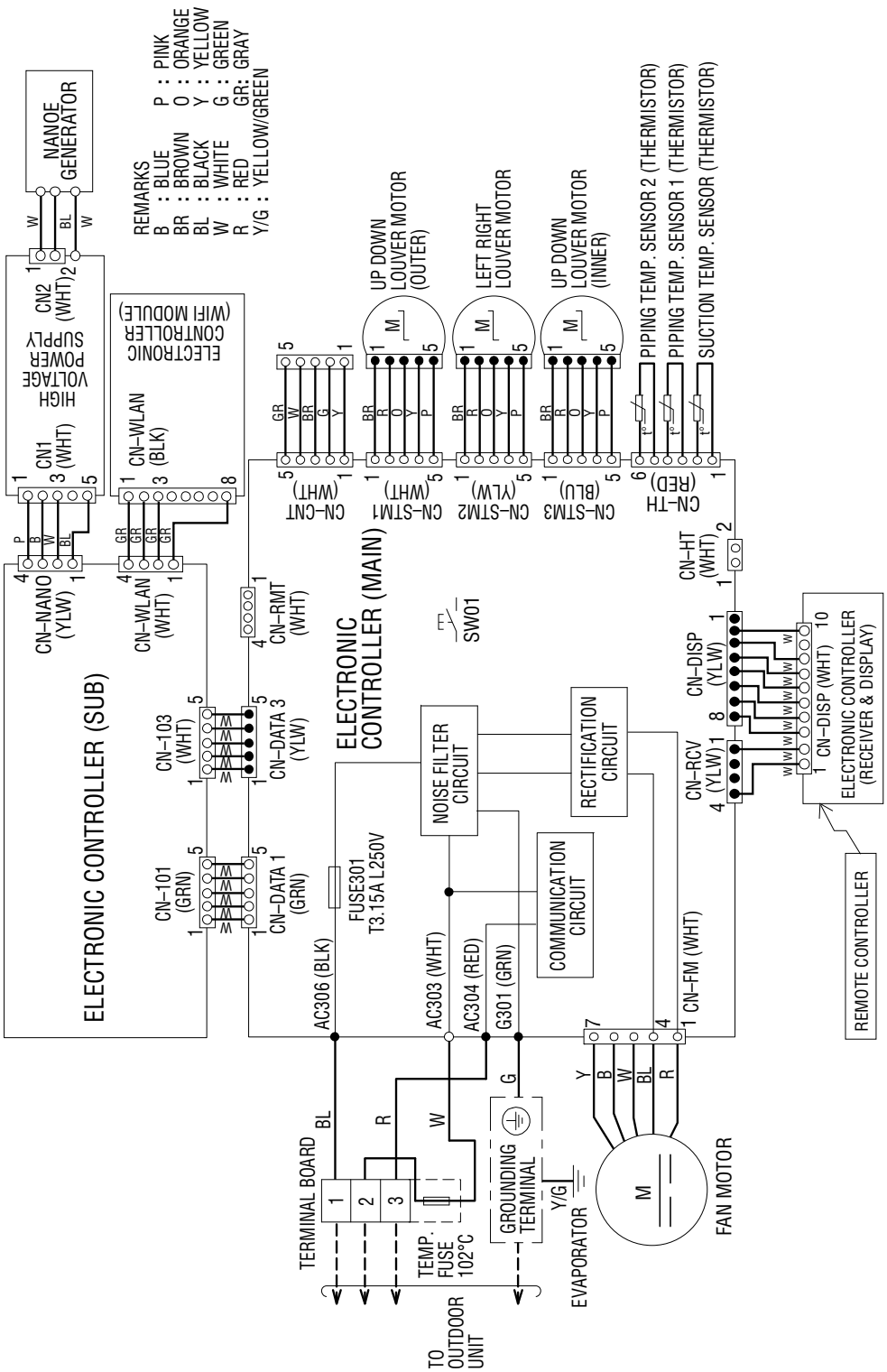

8.2 Outdoor Unit

8.2.1 CU-XE9WKUA CU-XE12WKUA

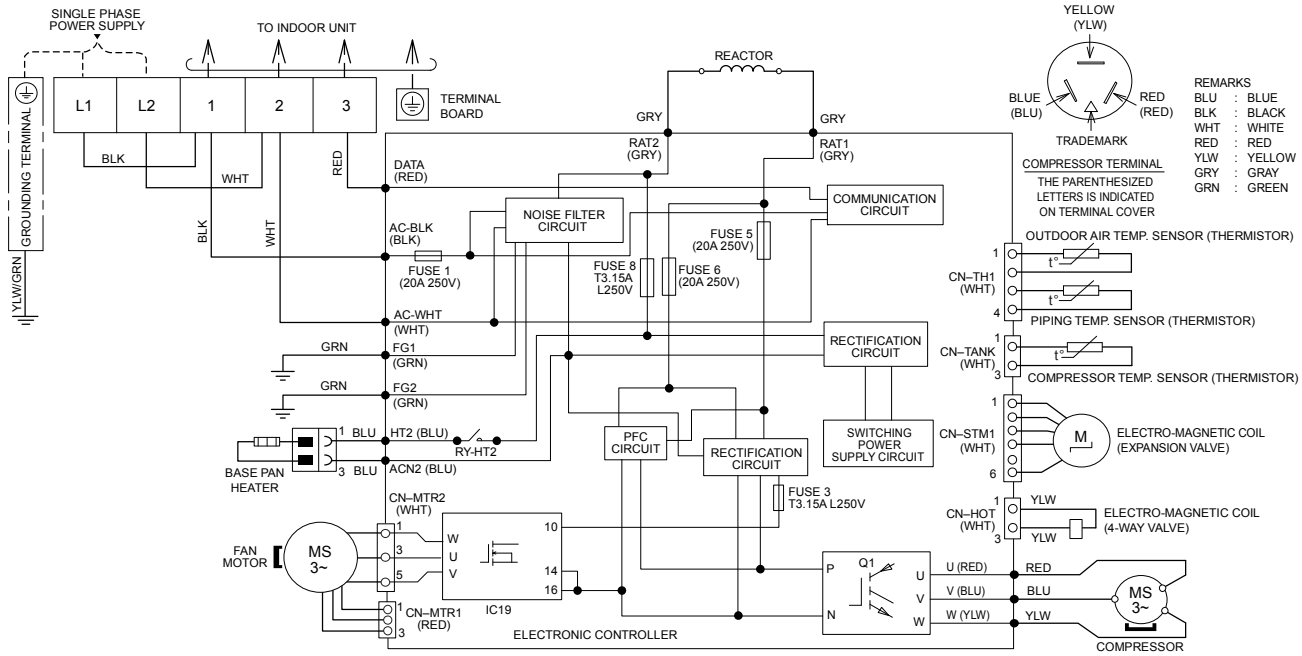

Resistance of Compressor Windings

MODEL	CU-XE9/12WKUA
CONNECTION	5RS102XTA21 (Ω)
U-V	1.780
U-W	1.780
V-W	1.780

Note: Resistance at 68°F (20°C) of ambient temperature.

8.2.2 CU-XE15WKUA

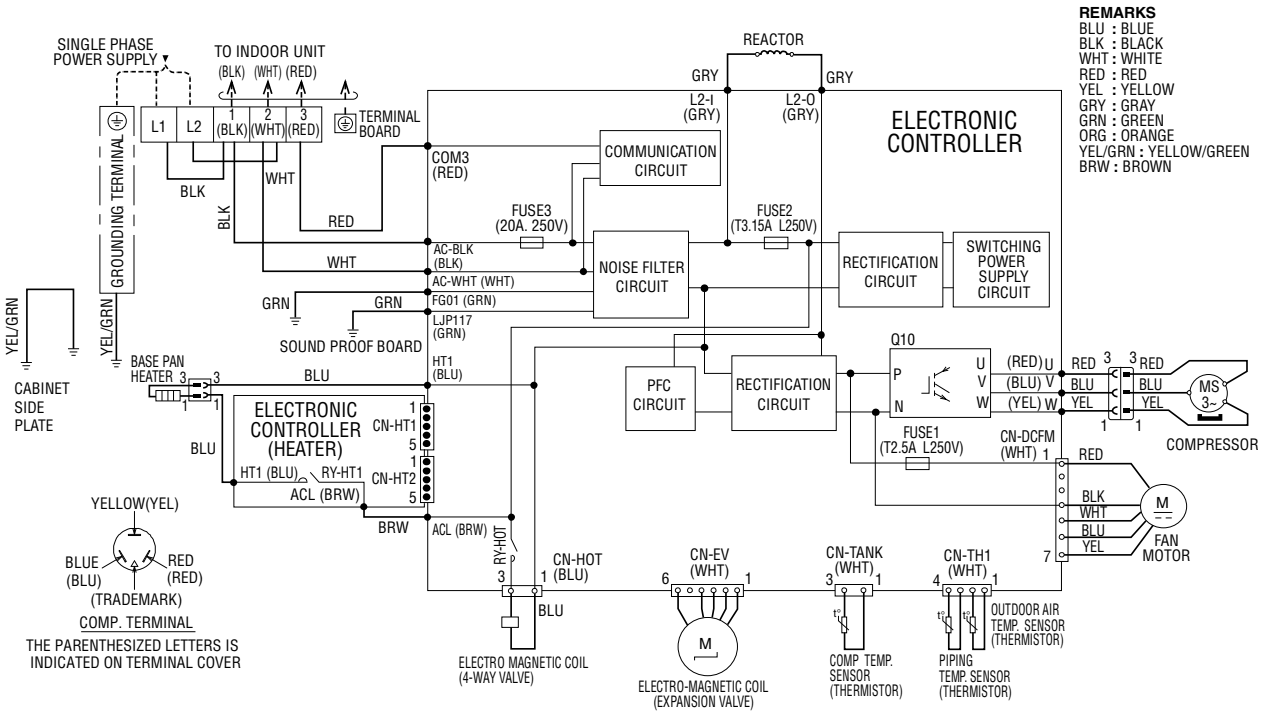

Resistance of Compressor Windings

MODEL	CU-XE15WKUA
CONNECTION	5RD132XBA21 (Ω)
U-V	1.897
U-W	1.907
V-W	1.882

Note: Resistance at 68°F (20°C) of ambient temperature.

8.2.3 CU-XE18WKUA CU-XE24WKUA

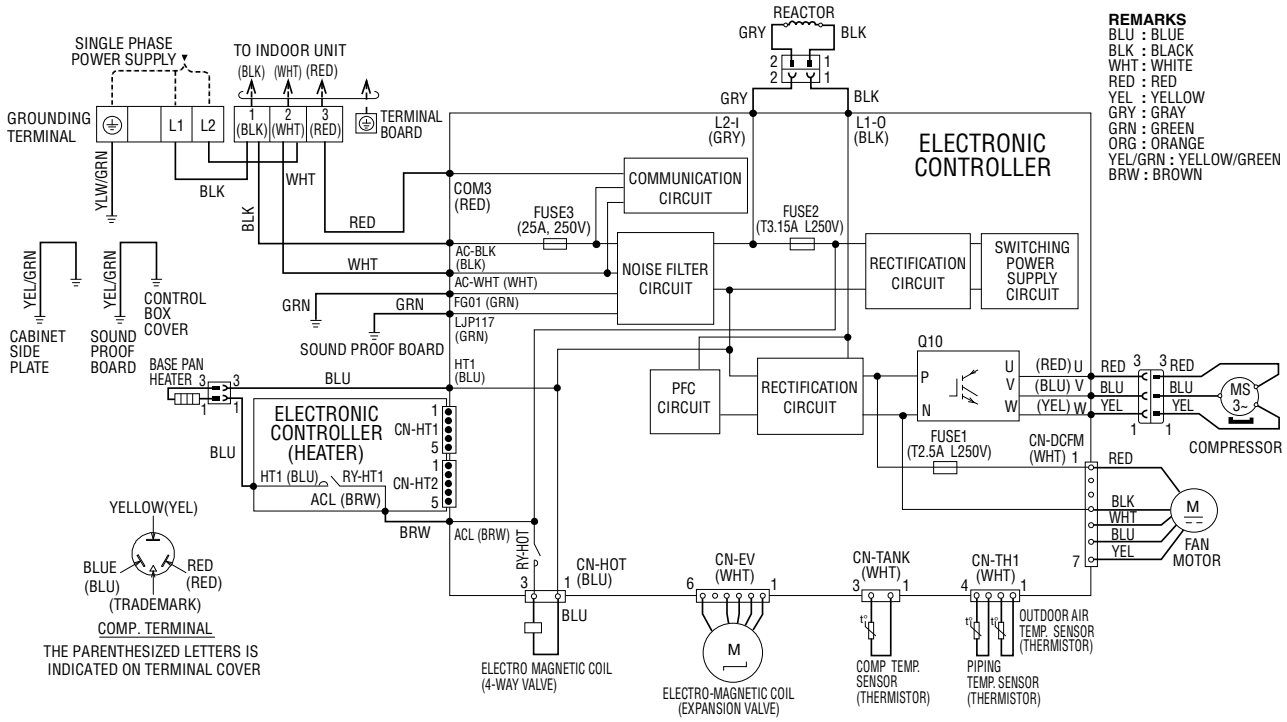

Resistance of Compressor Windings

MODEL	CU-XE18/24WKUA
CONNECTION	5KD240XAF21 (Ω)
U-V	0.720
U-W	0.726
V-W	0.708

Note: Resistance at 68°F (20°C) of ambient temperature.

9. Electronic Circuit Diagram

9.1 Indoor Unit

9.1.1 CS-XE9WKUAW CS-XE12WKUAW CS-XE15WKUAW

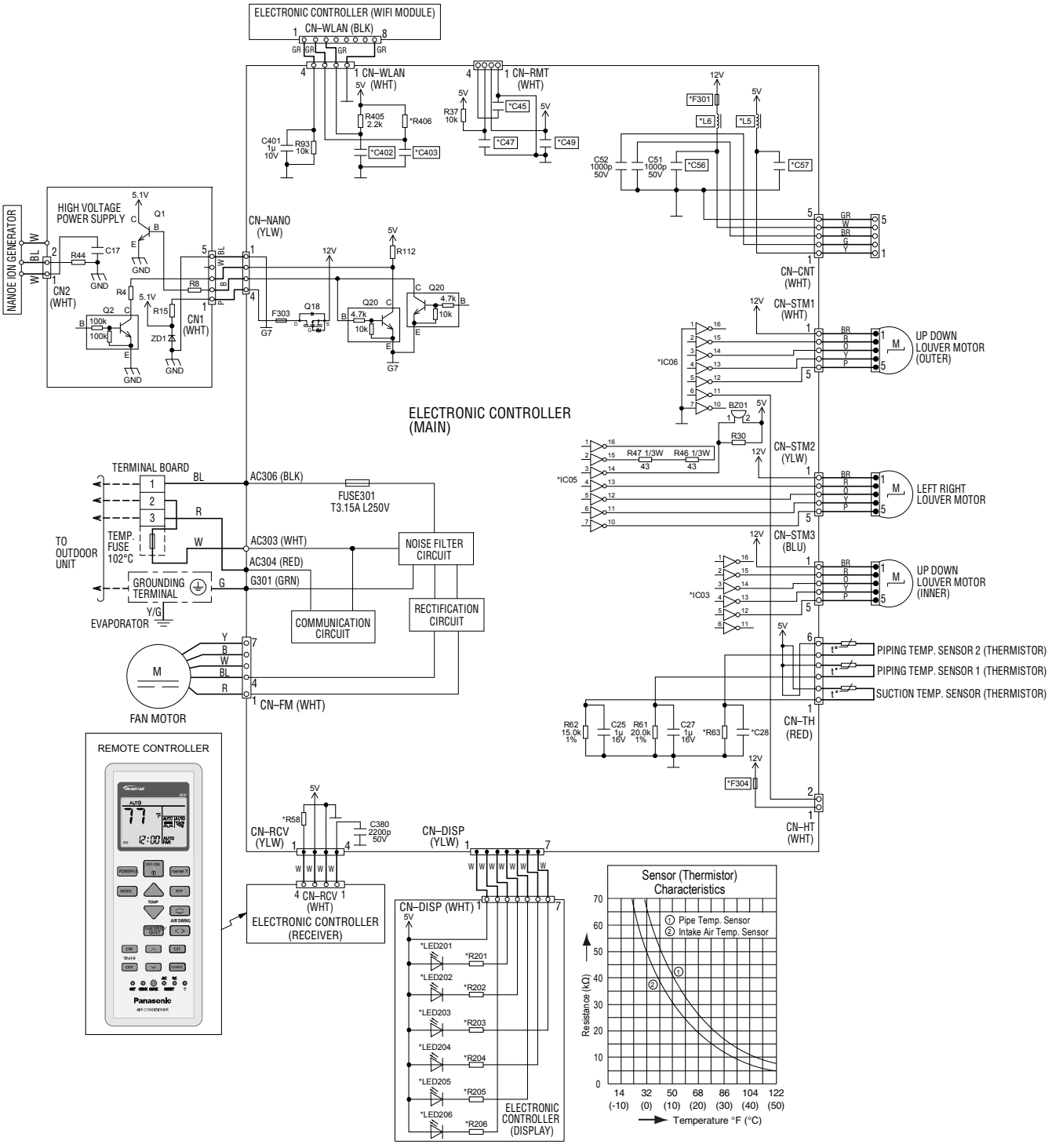

9.1.2 CS-XE18WKUAW CS-XE24WKUAW

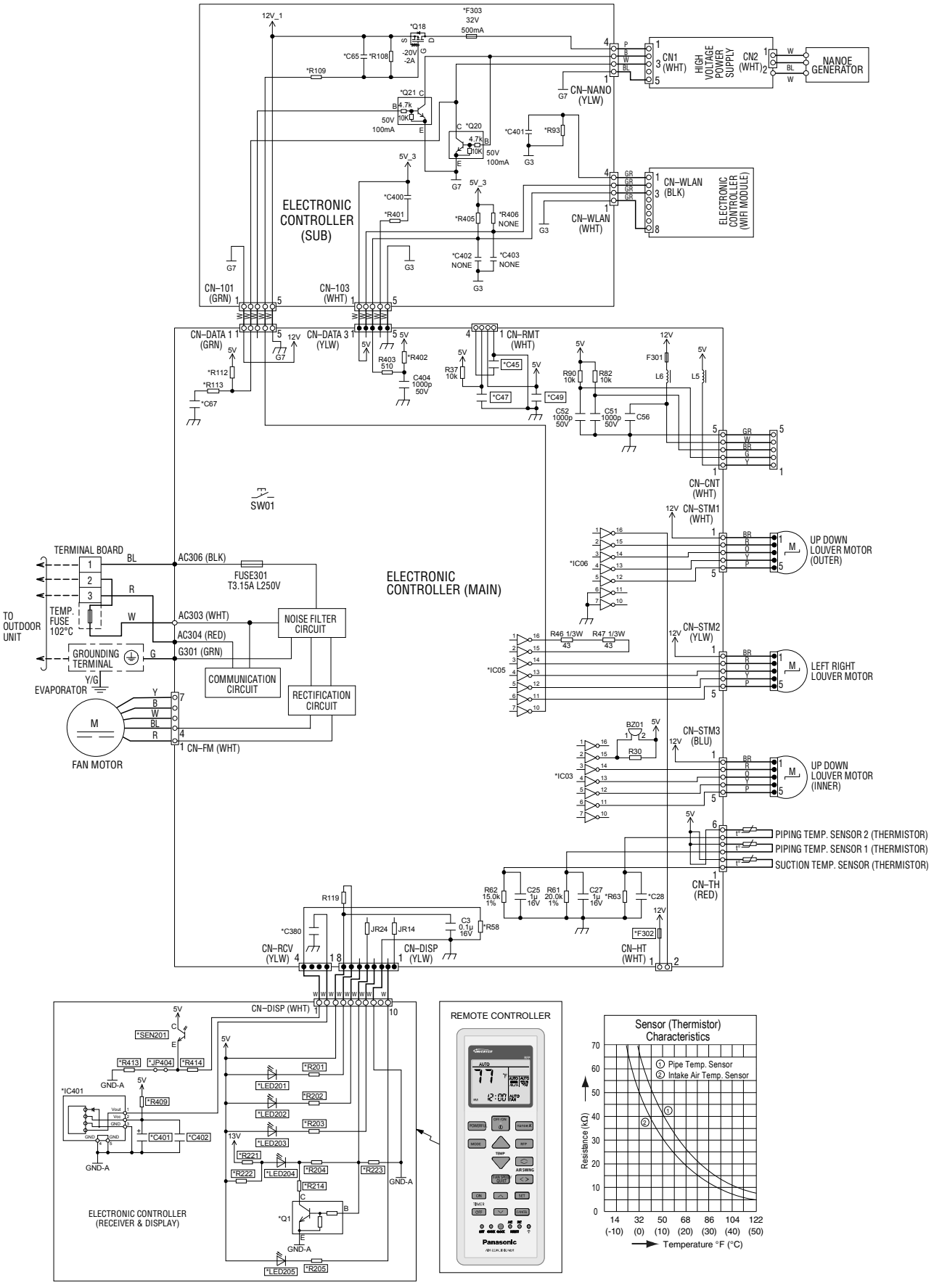

9.2 Outdoor Unit

9.2.1 CU-XE9WKUA CU-XE12WKUA

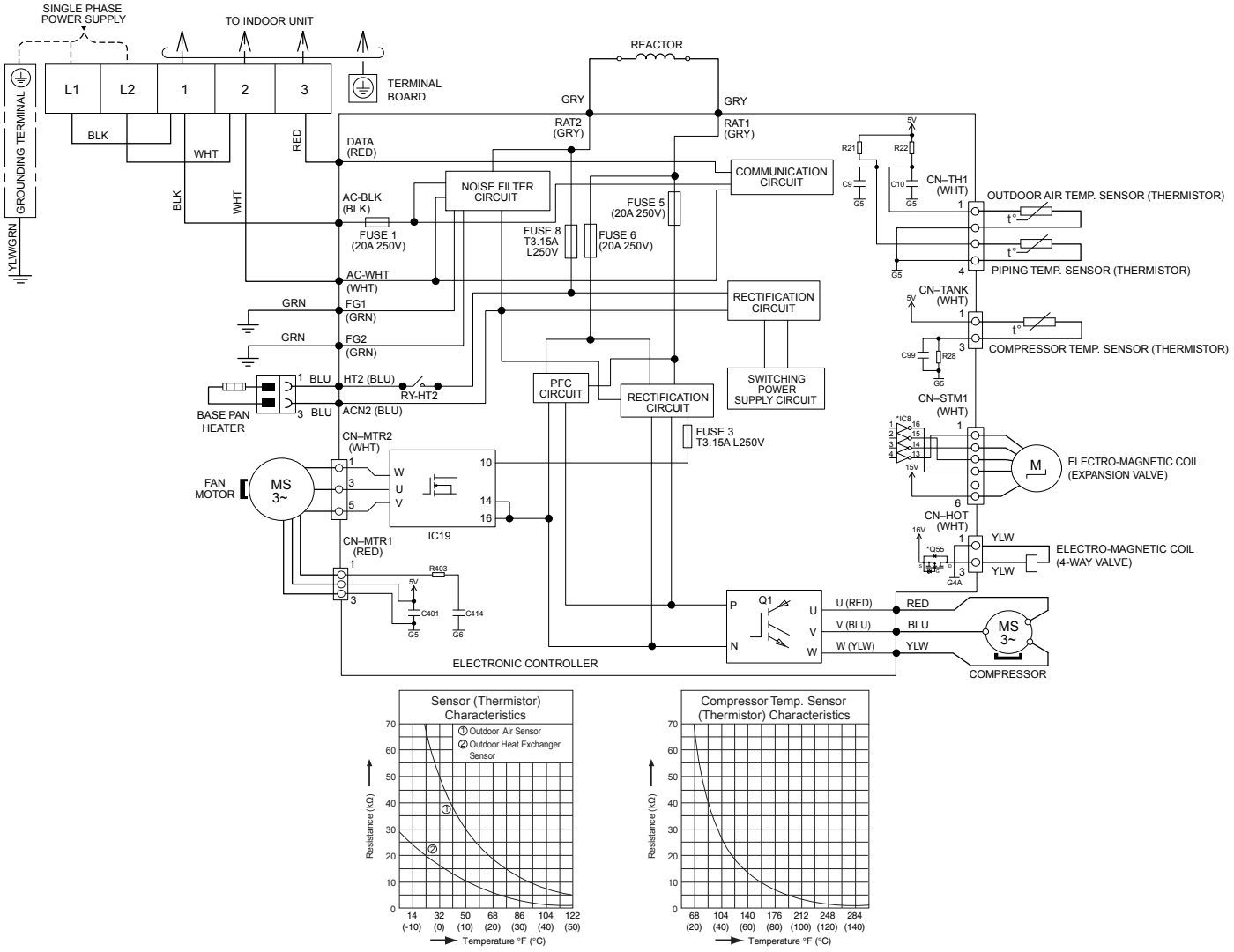

9.2.2 CU-XE15WKUA

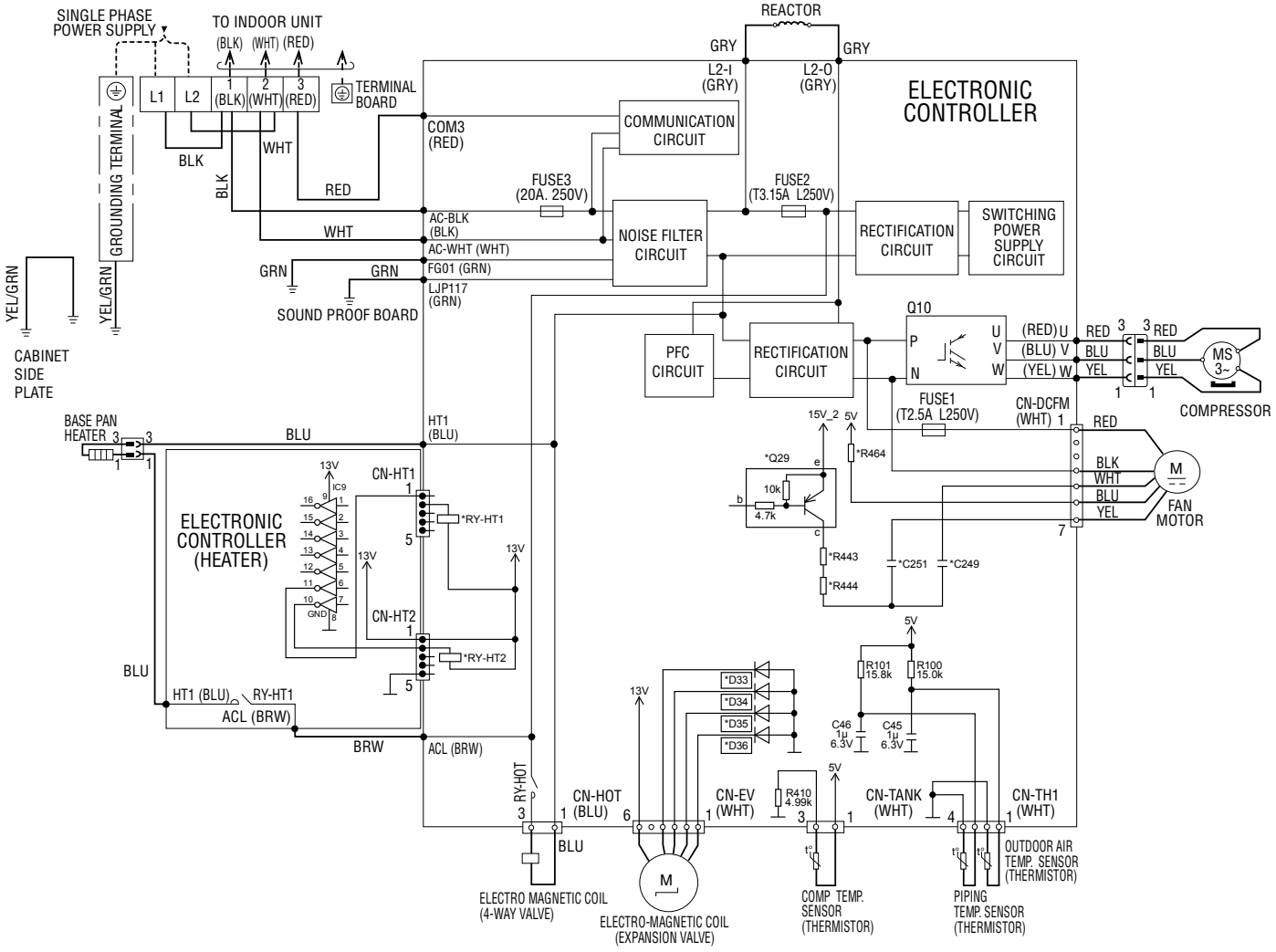

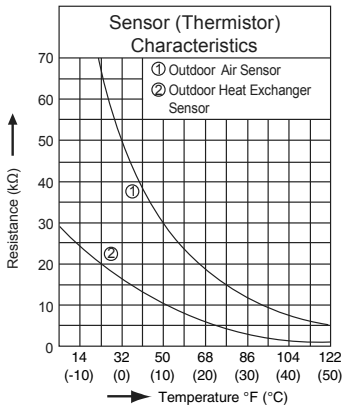

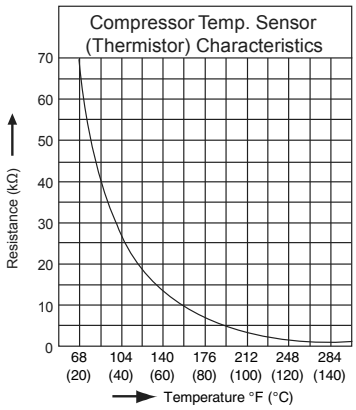

9.2.3 CU-XE18WKUA CU-XE24WKUA

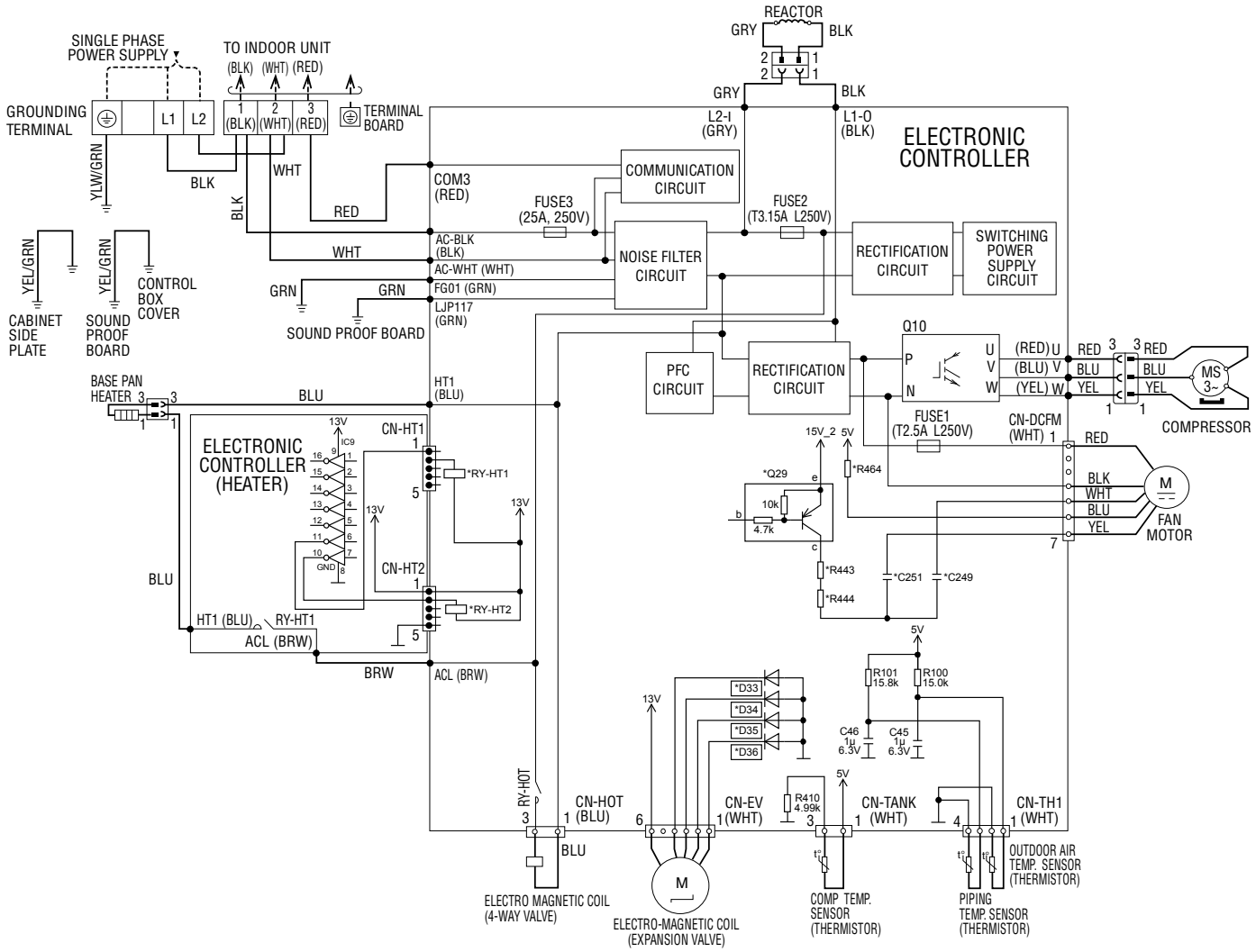

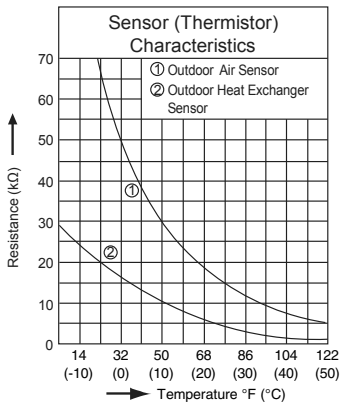

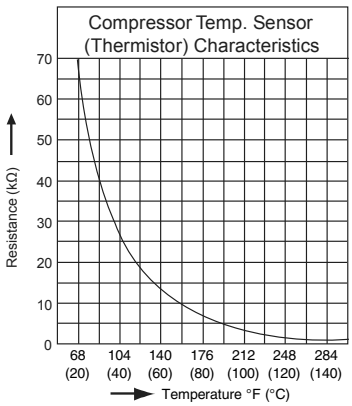

10. Printed Circuit Board

10.1 Indoor Unit

10.1.1 Main Printed Circuit Board

10.1.1.1 CS-XE9WKUAW CS-XE12WKUAW CS-XE15WKUAW

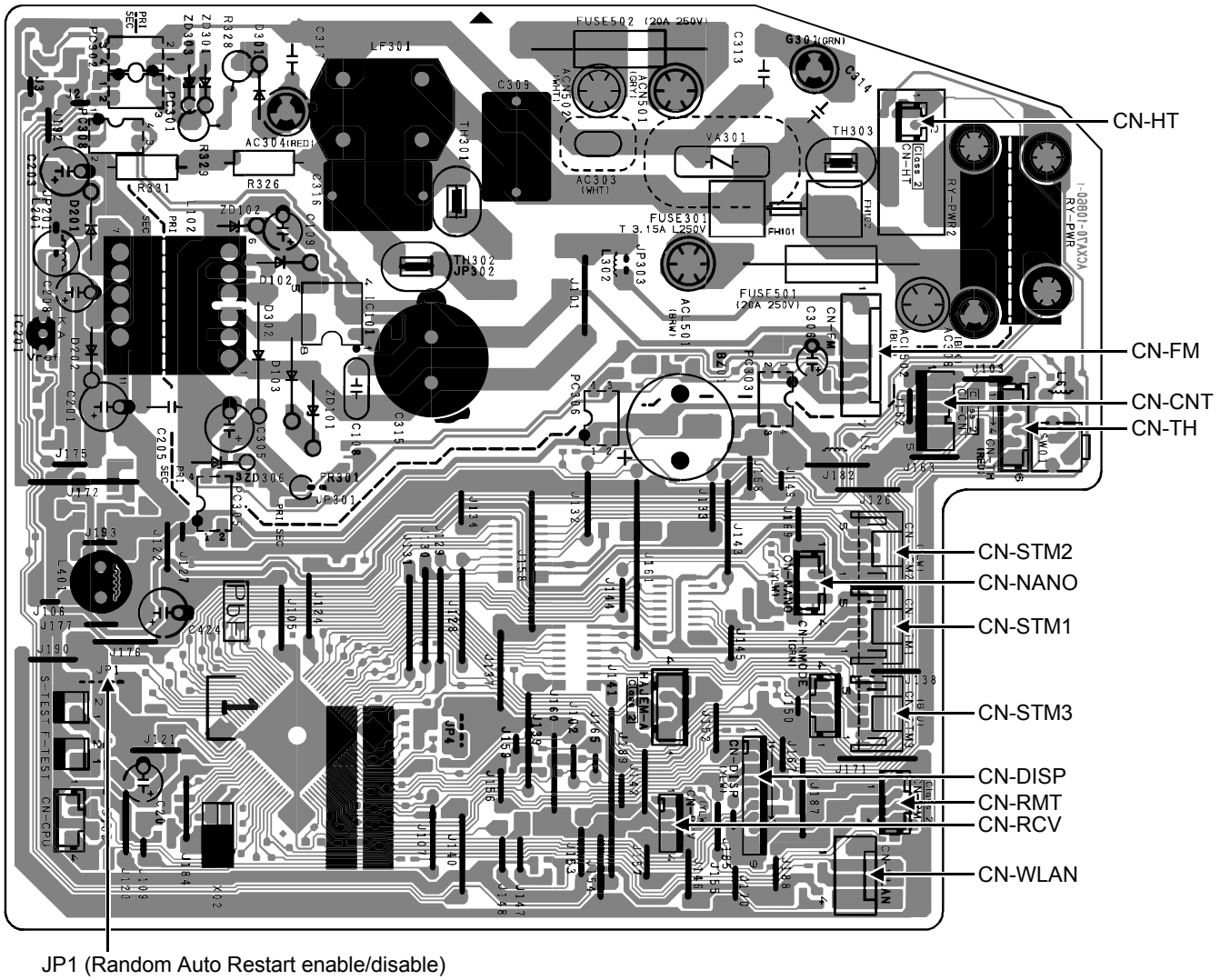

10.1.1.2 CS-XE18WKUAW CS-XE24WKUAW

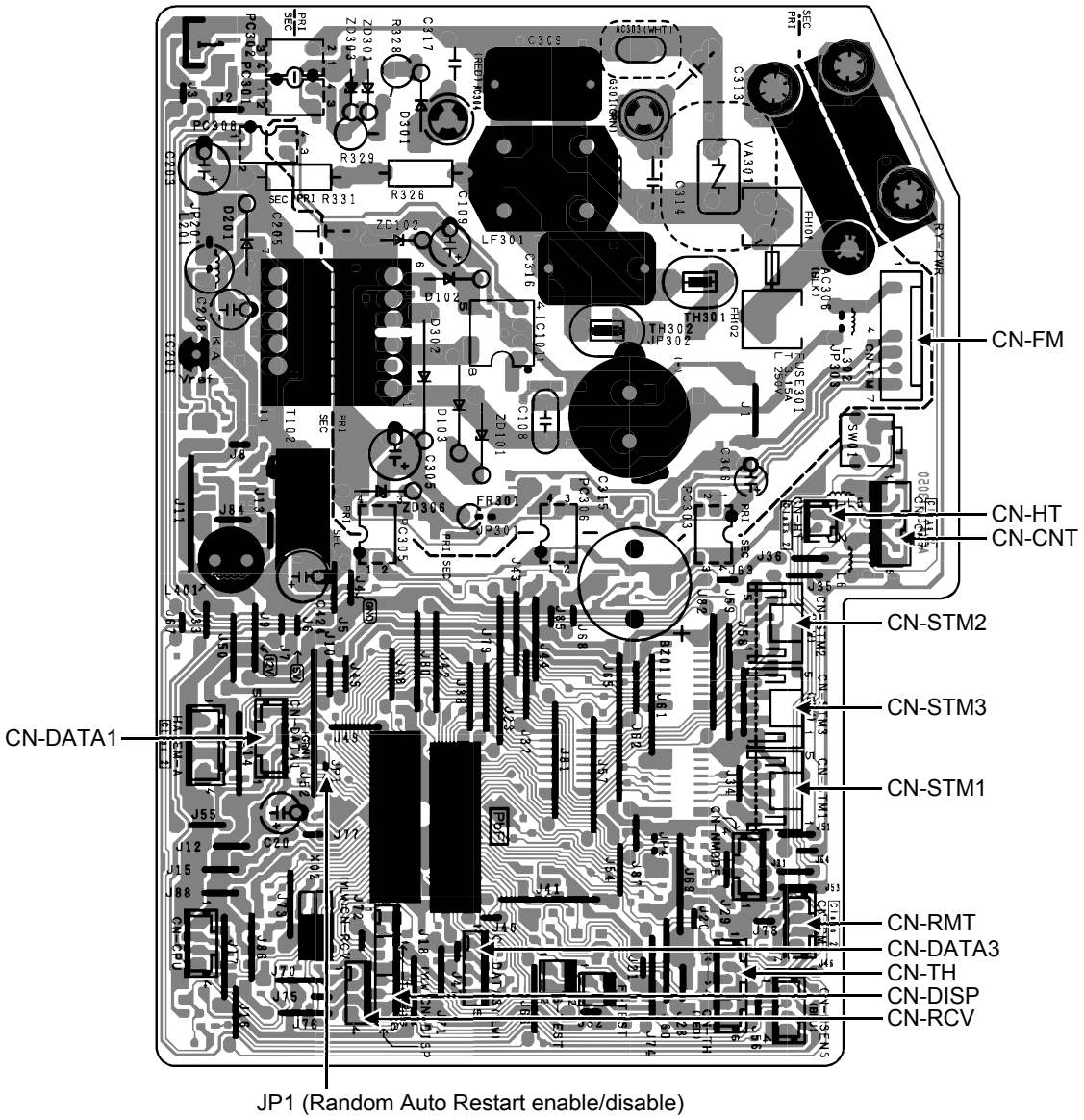

10.1.2 Indicator Printed Circuit Board

10.1.2.1 CS-XE9WKUAW CS-XE12WKUAW CS-XE15WKUAW

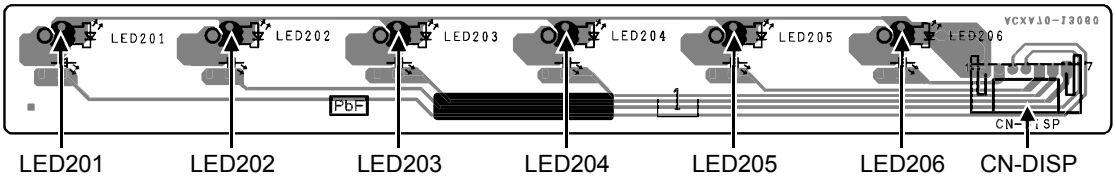

10.1.2.2 CS-XE18WKUAW CS-XE24WKUAW

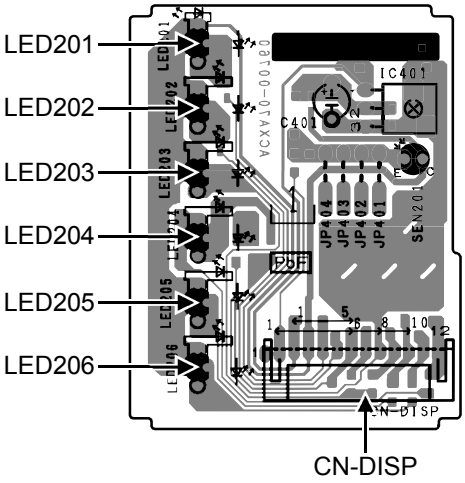

10.1.3 Receiver Printed Circuit Board (CS-XE9WKUAW CS-XE12WKUAW CS-XE15WKUAW)

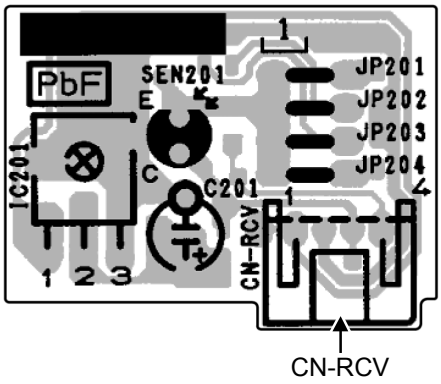

10.1.4 Sub Printed Board (CS-XE18/24WKUAW)

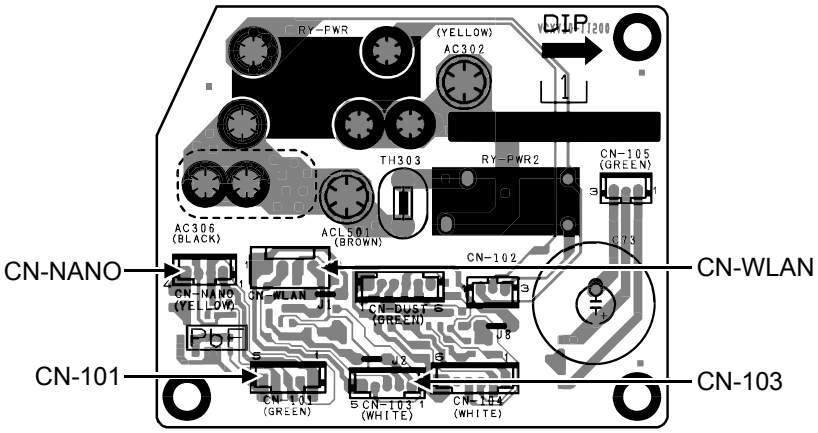

10.1.5 Nanoe X Printed Circuit Board

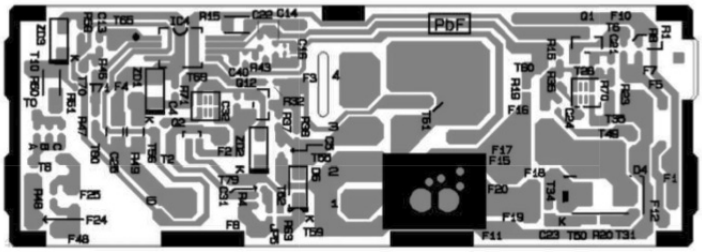

10.2 Outdoor Unit

10.2.1 Main Printed Circuit Board

10.2.1.1 CU-XE9WKUA CU-XE12WKUA

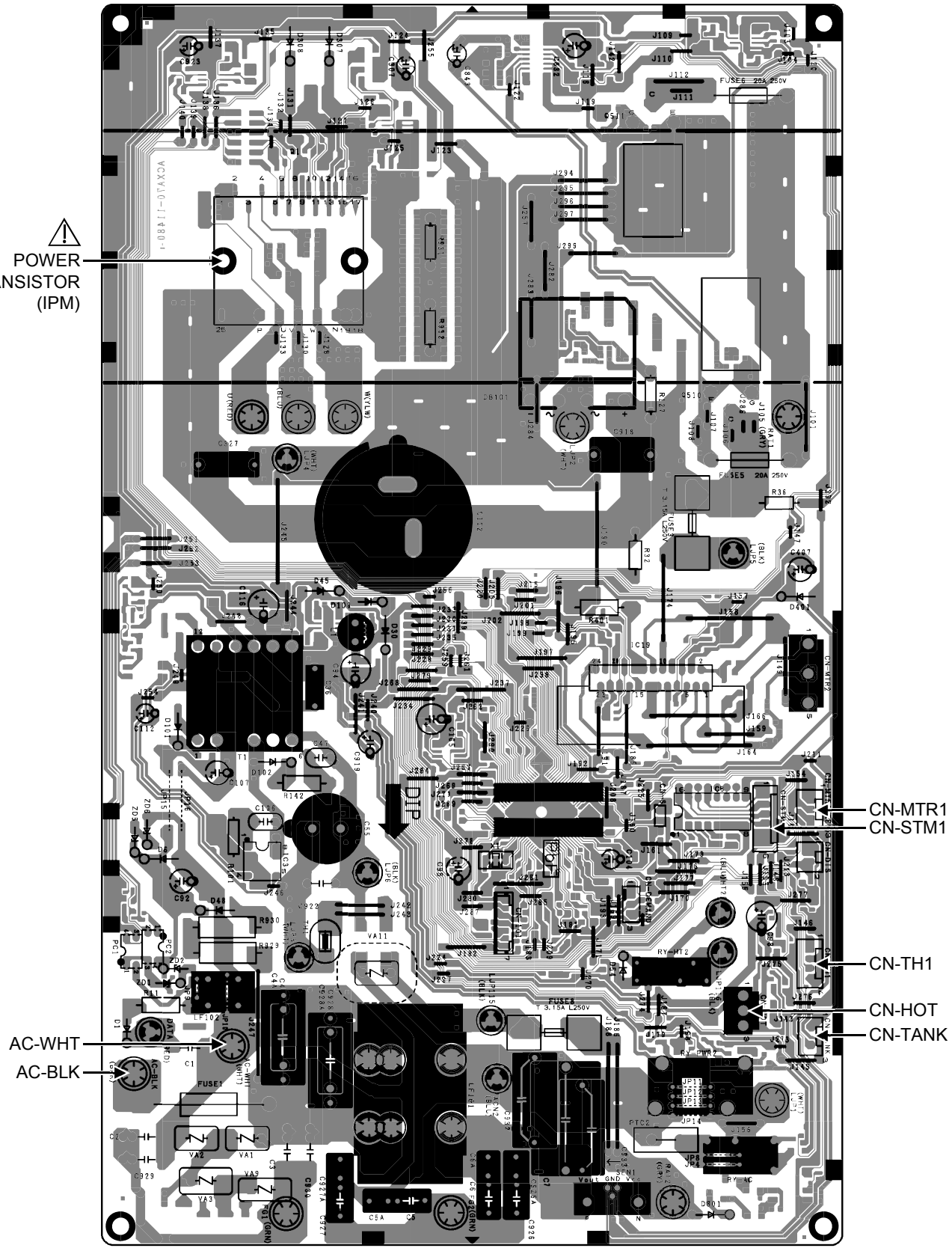

10.2.2 CU-XE15WKUA CU-XE18WKUA CU-XE24WKUA

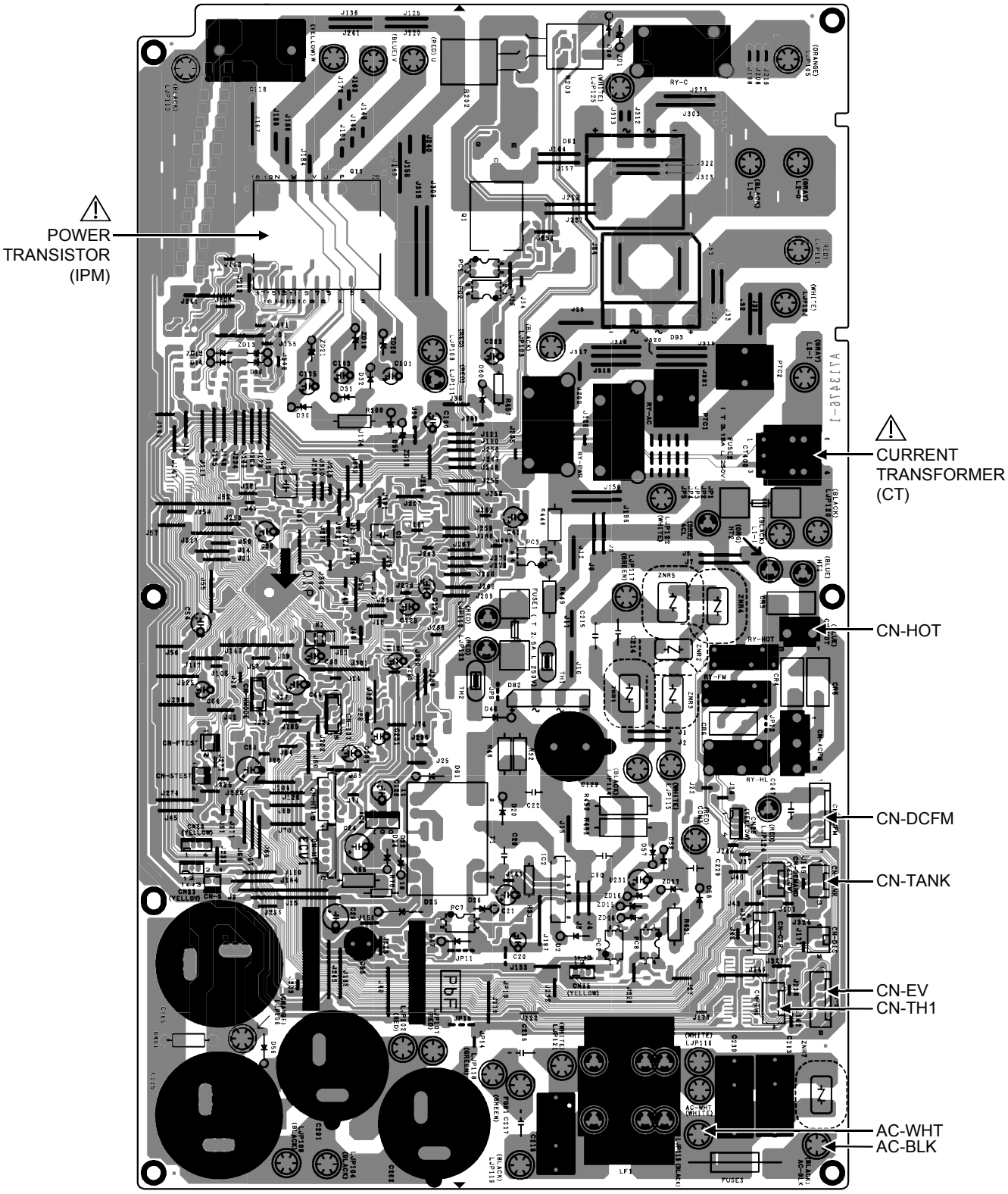

11. Installation Instruction

CS-XE9/12/15WKUAW CU-XE9/12/15WKUA

11.1 Select the Best Location

11.1.1 Indoor Unit

- Do not install the unit in excessive oil fume area such as kitchen, workshop and etc.
- There should not be any heat source or steam near the unit.
- There should not be any obstacles blocking the air circulation.
- A place where air circulation in the room is good.
- A place where drainage can be easily done.
- A place where noise prevention is taken into consideration.
- Do not install the unit near the door way.
- Ensure the spaces indicated by arrows from the wall, ceiling, fence or other obstacles.
- Indoor unit of this air conditioner shall be installed in a height of at least 5.9ft (1.8 m).

11.1.2 Outdoor Unit

- If an awning is built over the unit to prevent direct sunlight or rain, be careful that heat radiation from the condenser is not obstructed.
- There should not be any animal or plant which could be affected by hot air discharged.
- Keep the spaces indicated by arrows from wall, ceiling, fence or other obstacles.
- Do not place any obstacles which may cause a short circuit of the discharged air.
- If piping length is over the [piping length for additional gas], additional refrigerant should be added as shown in the table.
- Recommended installation height for outdoor unit should be above the seasonal snow level.
- Be careful not to locate outdoor unit directly under a roof line where falling snow or ice can cause damage or dripping water can increase ice accumulation and defrost cycles.

Model	Capacity (Btu/h)	Piping size		Std. Length	Max. Elevation	Min. Piping Length	Max. Piping Length	Additional Refrigerant	Piping Length for add. gas
		Gas	Liquid						
XE9****	8700	3/8" (9.52 mm)	1/4" (6.35 mm)	24.6 ft (7.5 m)	49.2 ft (15 m)	9.8 ft (3 m)	65.6 ft (20 m)	0.2 oz/ft (15 g/m)	24.6 ft (7.5 m)
XE12****	11500	1/2" (12.7 mm)							
XE15****	14700							0.2 oz/ft (20 g/m)	

Example: For XE9****
If the unit is installed at 32.8 ft (10 m) distance, the quantity of additional refrigerant should be 1.64 oz (37.5 g) .... (32.8 - 24.6) ft x 0.2 oz/ft = 1.64 oz. ((10-7.5) m x 15 g/m = 37.5 g).

11.1.3 Indoor/Outdoor Unit Installation Diagram

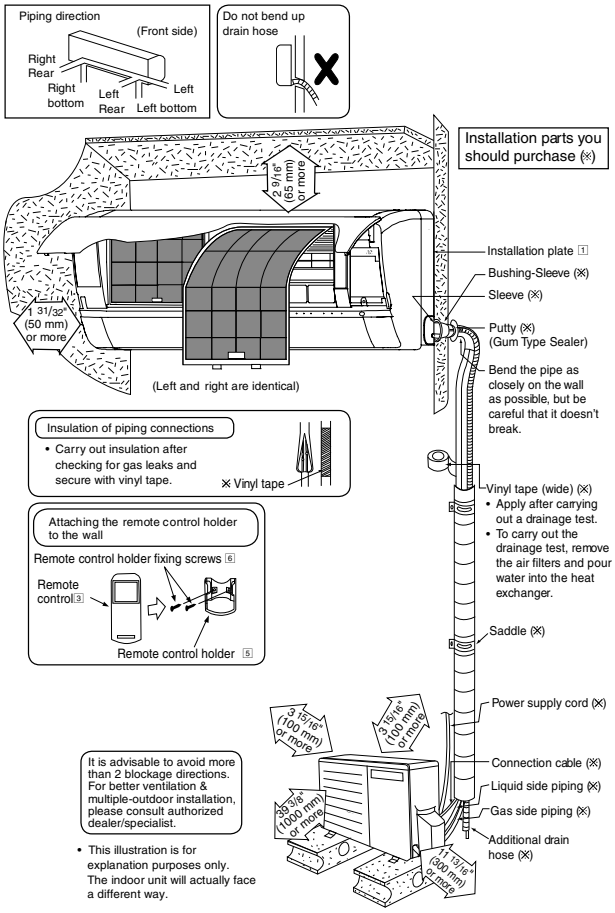

11.2 Indoor Unit

The mounting wall shall be strong and solid enough to prevent it from vibration.

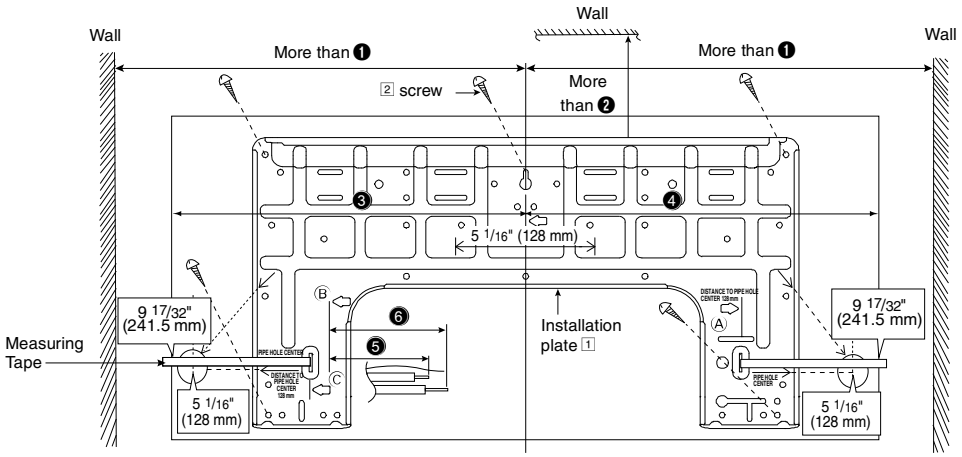

Model	Dimension					
	❶	❷	❸	❹	❺	❻
XE9****, XE12****, XE15****	19-9/32" (490 mm)	3-35/64" (90 mm)	17-9/32" (439 mm)	17" (432 mm)	1-11/16" (43 mm)	3-3/4" (95 mm)

The center of installation plate should be at more than ① at right and left of the wall.
The distance from installation plate edge to ceiling should more than ②.
From installation plate left edge to unit's left side is ③.
From installation plate right edge to unit's right is ④.

Ⓑ : For left side piping, piping connection for liquid should be about ⑤ from this line.

: For left side piping, piping connection for gas should be about ⑥ from this line.

1 Mount the installation plate on the wall with 5 screws or more (at least 5 screws).
(If mounting the unit on the concrete wall, consider using anchor bolts.)
   - Always mount the installation plate horizontally by aligning the marking-off line with the thread and using a level gauge.

2 Drill the piping plate hole with ø2-3/4" (ø70 mm) hole-core drill.
   - Line according to the left and right side of the installation plate. The meeting point of the extended line is the center of the hole. Another method is by putting measuring tape at position as shown in the diagram above. The hole center is obtained by measuring the distance namely 5-1/16" (128 mm) for left and right hole respectively.
   - Drill the piping hole at either the right or the left and the hole should be slightly slanting to the outdoor side.

11.2.1 To Drill a Hole in the Wall and Install a Sleeve of Piping

1 Insert the piping sleeve to the hole.
2 Fix the bushing to the sleeve.
3 Cut the sleeve until it extrudes about 19/32" (15 mm) from the wall.

⚠ CAUTION

❗ When the wall is hollow, please be sure to use the sleeve for tube assembly to prevent dangers caused by mice biting the connection cable.

4 Finish by sealing the sleeve with putty or caulking compound at the final stage.

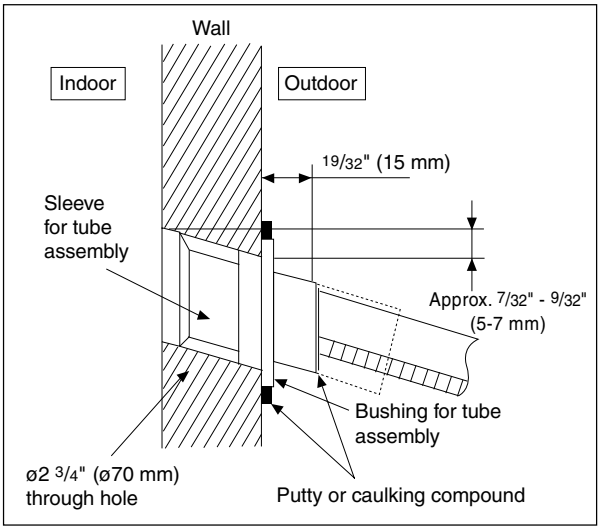

11.2.2 Indoor Unit Installation

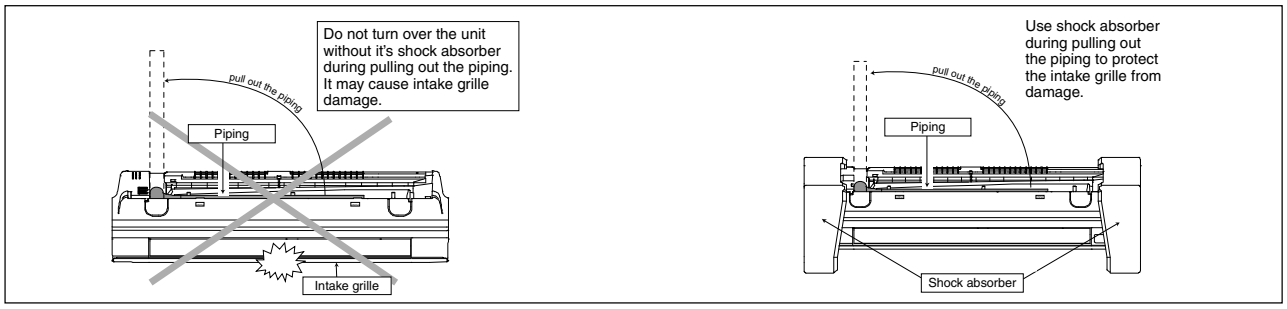

11.2.2.1 For the right rear piping

Step-1	Pull out the Indoor piping
Step-2	Install the Indoor Unit
Step-3	Secure the Indoor Unit
Step-4	Insert the connection cable

11.2.2.2 For the right bottom piping

Step-1	Pull out the Indoor piping
Step-2	Install the Indoor Unit
Step-3	Insert the connection cable
Step-4	Secure the Indoor Unit

11.2.2.3 For the embedded piping

Step-1	Replace the drain hose
Step-2	Bend the embedded piping
	• Use a spring bender or equivalent to bend the piping so that the piping is not crushed.
Step-3	Pull the connection cable into Indoor Unit
	• The inside and outside connection cable can be connected without removing the front grille.
Step-4	Cut and flare the embedded piping
	• When determining the dimensions of the piping, slide the unit all the way to the left on the installation plate. • Refer to the section “Cutting and flaring the piping”.
Step-5	Install the Indoor Unit
Step-6	Connect the piping
	• Please refer to “Connecting the piping” column in outdoor unit section. (Below steps are done after connecting the outdoor piping and gas-leakage confirmation.)
Step-7	Insulate and finish the piping
	• Please refer to “Insulation of piping connection” column as mentioned in indoor/outdoor unit installation.
Step-8	Secure the Indoor Unit

Right Rear piping

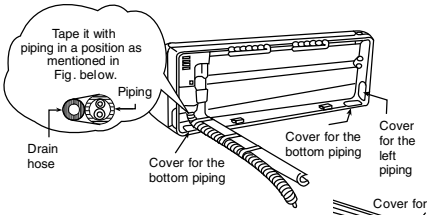

How to keep the cover

In case the cover is cut, keep the cover at the rear of chassis as shown in the illustration for future reinstallation.
(Left and 2 bottom covers for piping.)

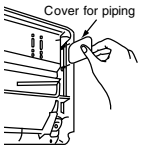

Right Bottom piping

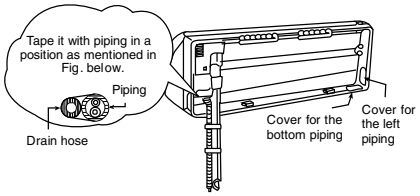

Install the indoor unit

Hook the indoor unit onto the upper portion of installation plate. (Engage the indoor unit with the upper edge of the installation plate). Ensure the hooks are properly seated on the installation plate by moving it in left and right.

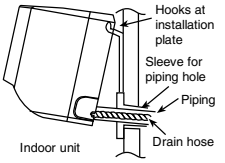

Secure the Indoor Unit

Press the lower left and right side of the unit against the installation plate until hooks engages with their slot (sound click).

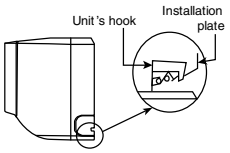

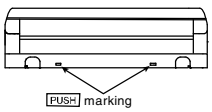

To take out the unit, push the PUSH marking at the bottom unit, and pull it slightly towards you to disengage the hooks from the unit.

Insert the connection cable

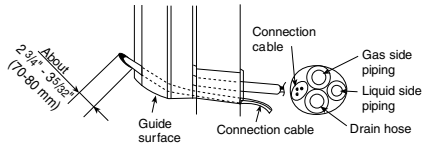

(This can be used for left rear piping and bottom piping also.)

Replace the drain hose

Rear view for left piping installation

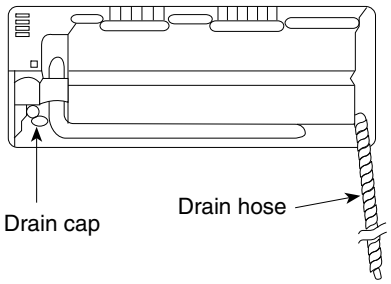

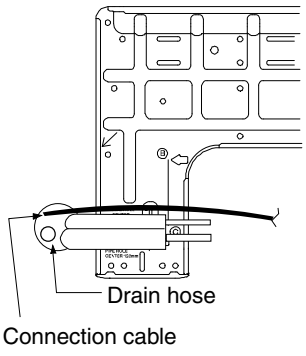

Adjust the piping slightly downwards.

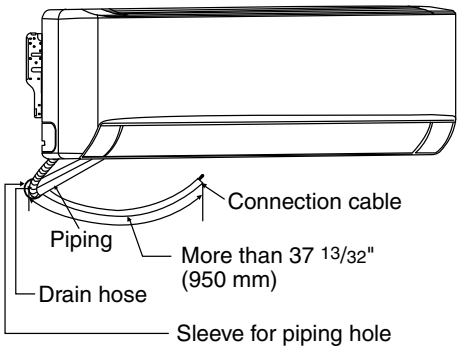

- How to pull the piping and drain hose out, in case of embedded piping.

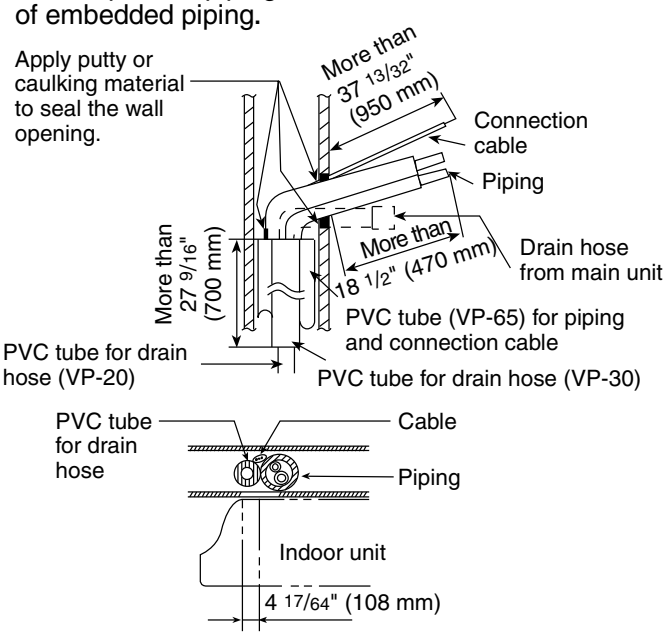

- How to insert the connection cable and drain hose in the case of left piping.

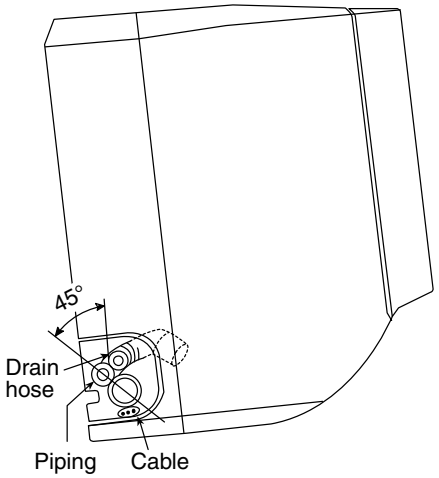

(For right piping, follow the same procedure)

Drain hose adapter 7 usage

- Join indoor drain hose to 3/4" (20 mm) nominal PVC pipe size by using drain hose adapter 7 when necessary.

Remarks :
Make sure indoor unit drain hose & 3/4" (20 mm) nominal PVC pipe are fully inserted to drain hose adapter 7.

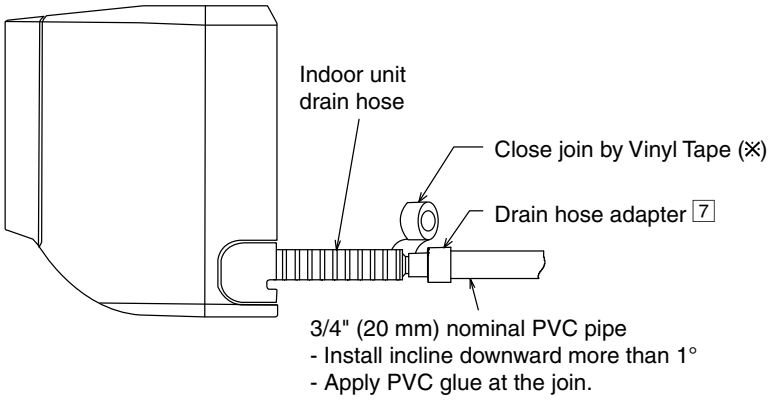

11.2.3 Connect the Cable to the Indoor Unit

1 The inside and outside connection cable can be connected without removing the front grille.
2 Unscrew the conduit cover and fix the conduit connector to conduit cover with lock nut, then secure it against chassis.
3 Connection cable between indoor unit and outdoor unit should be UL listed or CSA approved 4 conductor wires minimum AWG16 in accordance with local electric codes.
   - Ensure the colour of wires of outdoor unit and terminal number are the same as the indoor's respectively.

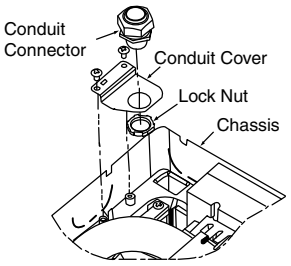

Rear Side of Indoor Unit

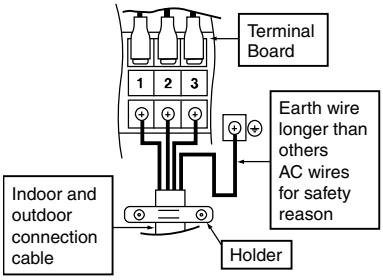

Terminals on the indoor unit	1	2	3	⏚
Colour of wires (connection cable)				
Terminals on the outdoor unit	1	2	3	⏚

⚠ WARNING

⏚ This equipment must be properly earthed.

   - Earth lead wire shall be Yellow/Green (Y/G) in colour and shall be longer than other lead wires as shown in the figure for electrical safety in case of slipping.

11.2.3.1 Wire Stripping and Connecting Requirement

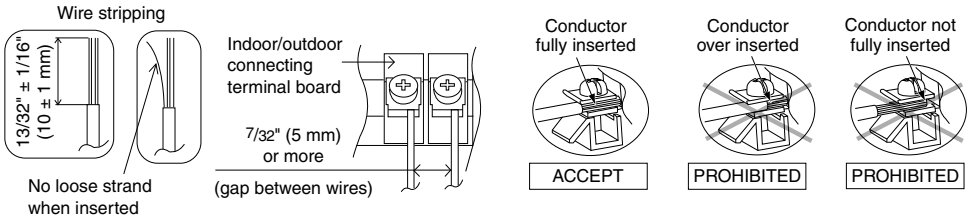

11.3 Outdoor Unit

11.3.1 Install the Outdoor Unit

- After selecting the best location, start installation according to Indoor/Outdoor Unit Installation Diagram.
  1 Fix the unit on concrete or rigid frame firmly and horizontally with a bolt nut ø13/32" (ø10 mm).
  2 When installing at roof, please consider strong wind and earthquake.
  Please fasten the installation stand firmly with bolt or nails.

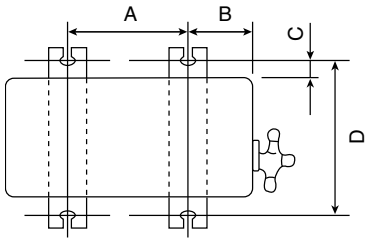

Model	A	B	C	D
XE9**** XE12****	21-1/4" (540 mm)	6-19/64" (160 mm)	23/32" (18.5 mm)	12-63/64" (330 mm)
XE15****	24-1/8" (613 mm)	5-5/32" (131 mm)	15/16" (24 mm)	14-3/16" (360.5 mm)

11.3.2 Connect the Piping

11.3.2.1 Connecting the Piping to Indoor

Please make flare after inserting flare nut (locate at joint portion, of tube assembly) onto the copper pipe. (In case of using long piping)
Connect the piping

- Align the center of piping and sufficiently tighten the flare nut with fingers.
- Further tighten the flare nut with torque wrench in specified torque as stated in the table.

Do not over tighten, over tightening may cause gas leakage	
Piping size	Torque
1/4" (6.35 mm)	13.3 lbf.ft [18N•m (1.8 kgf.m)]
3/8" (9.52 mm)	31.0 lbf.ft [42 N•m (4.3 kgf.m)]
1/2" (12.7 mm)	40.6 lbf.ft [55 N•m (5.6 kgf.m)]
5/8" (15.88 mm)	47.9 lbf.ft [65 N•m (6.6 kgf.m)]
3/4" (19.05 mm)	73.8 lbf.ft [100 N•m (10.2 kgf.m)]

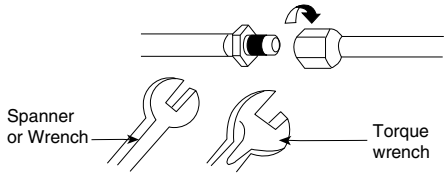

11.3.2.2 Connecting the Piping to Outdoor

Decide piping length and then cut by using pipe cutter.
Remove burrs from cut edge.
Make flare after inserting the flare nut (located at valve) onto the copper pipe.
Align center of piping to valve and then tighten with torque wrench to the specified torque as stated in the table.

11.3.2.3 Gas leak checking

Pressure test to system to 400 PSIG with dry nitrogen, in stages. Thoroughly leak check the system.
If the pressure holds, release the nitrogen and proceed to section 11.3.3.

11.3.3 Evacuation of the Equipment

WHEN INSTALLING AN AIR CONDITIONER, BE SURE TO EVACUATE THE AIR INSIDE THE INDOOR UNIT AND PIPES in the following procedure.

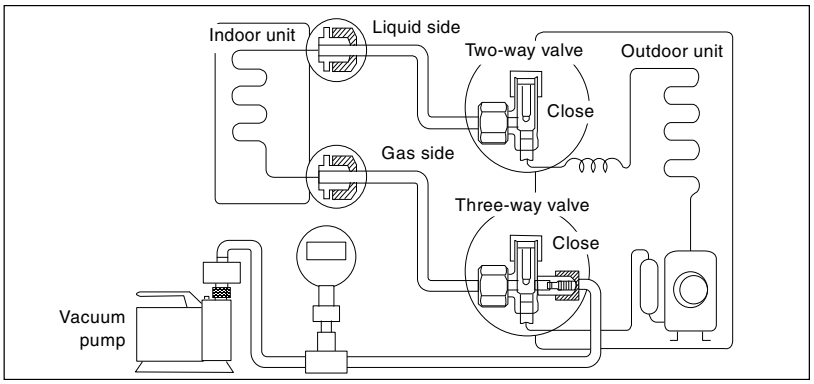

1 Connect a charging hose with a push pin to the Low side of a charging set and the service port of the 3-way valve.
2 Connect the micron gauge between vacuum pump and service port of outdoor units.
3 Turn on the power switch of the vacuum pump and make sure that connect digital micron gauge and to pull down to a value of 500 microns.
4 To make sure micron gauge a value 500 microns and close the low side valve of the charging set and turn off the vacuum pump.
5 Disconnect the vacuum pump house from the service port of the 3-way valve.
6 Tighten the service port caps of the 3-way valve at a torque of 13.3 lbf.ft (18 N•m) with a torque wrench.
7 Remove the valve caps of both of the 2-way valve and 3-way valve. Position both of the valves to “Open” using a hexagonal wrench (5/32" (4 mm)).
8 Mount valve caps onto the 2-way valve and the 3-way valve.
   o Be sure to check for gas leakage.

- If micron gauge value does not descend 500 microns, take the following measures:
- If the leak stops when the piping connections are tightened further, continue working from step ③.
- If the leak does not stop when the connections are retightened, repair location of leak.
- Do not release refrigerant during piping work for installation and reinstallation.
- Be careful with the liquid refrigerant, it may cause frostbite.

11.3.4 Connect the Cable to the Outdoor Unit

XE9** , XE12****

1 Remove Top panel.
2 Remove Control Board Cover (Resin and Metal).
3 Remove plugs.
4 Fix the conduit connectors to the knockout holes with lock-nuts, then secure them against the side panel.
5 All wires pass through conduits .
6 Connection wires between indoor unit and outdoor unit should be UL listed or CSA approved 4 conductor wires minimum AWG16 in accordance with local electric codes.
7 Wire connection to the power supply (208/230V 60Hz) through circuit breaker.
   o Connect the UL listed or CSA approved wires minimum AWG14 to the terminal board, and connect the other end of the wires to ELCB/GFCI.
8 Connect the power supply cord and connection wires between indoor unit and outdoor unit according to the diagram below.
9 Secure the wire onto the control board with the holder (clamper).
10 After completing wiring connections, reattach the control board cover (Metal and Resin) and the top panel to the original position with the screws.
11 For wire stripping and connection requirement, refer to instruction 11.2.3 of indoor unit.

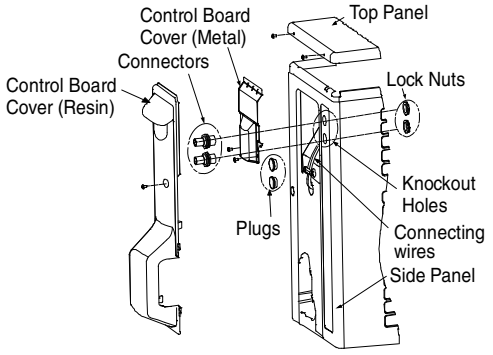

XE15****

1 Remove control board cover (Resin and Metal).
2 Remove particular plate.
3 Remove plugs.
4 Fix the conduit connectors to the knockout holes with lock-nuts, then secure them against the side panel.
5 All wires pass through conduits & particular plate's opening hole.
6 Connection wires between indoor unit and outdoor unit should be UL listed or CSA approved 4 conductor wires minimum AWG16 in accordance with local electric codes.
7 Wire connection to the power supply (208/230V 60Hz) through circuit breaker.
   - Connect the UL listed or CSA approved wires minimum AWG14 to the terminal board, and connect the other end of the wires to ELCB/ GFCI.
8 Connect the power supply cord and connecting wire between indoor unit and outdoor unit according to the diagram below.
9 Secure the wire onto the control board with the holder (clamper).
10 After completing wiring connections, reattach the particular plate and control board cover (metal and resin) to the original position with the screws.
11 For wire stripping and connection requirement, refer to instruction 11.2.3 of indoor unit.

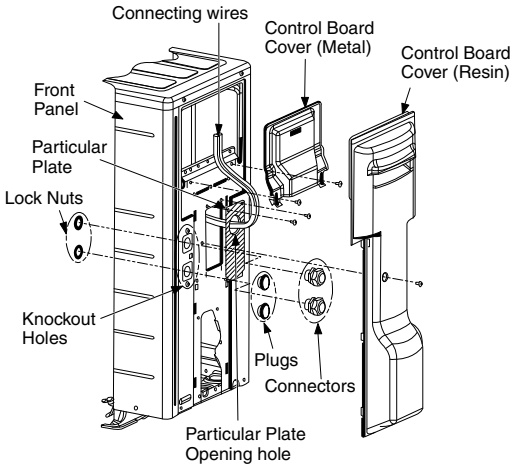

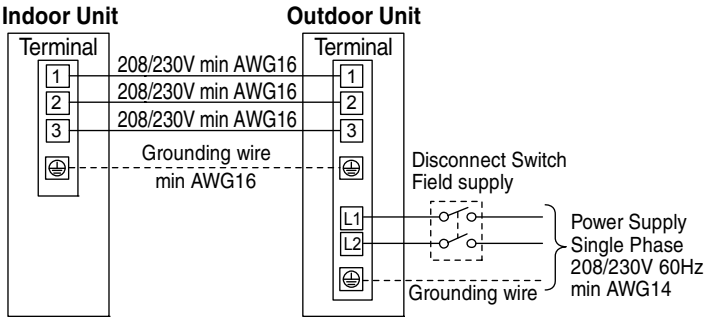

⚠ WARNING

This equipment must be properly earthed.

- Earth lead wire shall be Yellow/Green (Y/G) in colour and should be longer than other lead wires as shown in the figure for electrical safety in case of slipping.

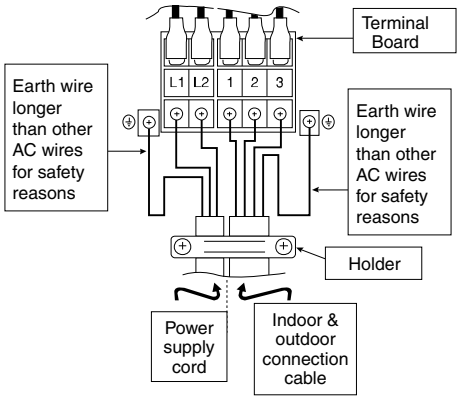

11.3.5 Piping Insulation

1 Please carry out insulation at pipe connection portion as mentioned in Indoor/Outdoor Unit Installation Diagram. Please wrap the insulated piping end to prevent water from going inside the piping.
2 If drain hose or connecting piping is in the room (where dew may form), please increase the insulation by using POLY-E FOAM with thickness 1/4" (6 mm) or above.

11.3.5.1 Cutting and flaring the piping

1 Please cut using pipe cutter and then remove the burrs.
2 Remove the burrs by using reamer. If burrs are not removed, gas leakage may be caused. Turn the piping end down to avoid the metal powder entering the pipe.
3 Please make flare after inserting the flare nut onto the copper pipes.

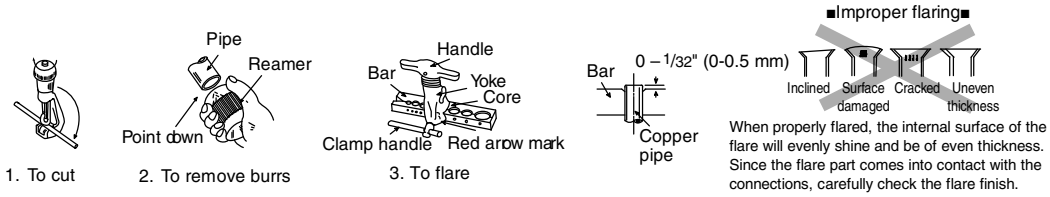

11.3.6 Disposal of Outdoor Unit Drain Water

The unit should be mounted on a stand that suits to a local environmental requirement.

- When the Drain elbow being used, please ensure to:-
  - Provide a minimum clearance of 2" (50mm) to access the bottom of base pan.
  - Seal the four 25/32" (20mm) diameter holes with Rubber caps (refer to illustration below).
  - Use a rigid or flexible PVC pipe (local supply) to dispose drained water from the elbow or use a stainless steel tray (local supplied) to collect and dispose water.

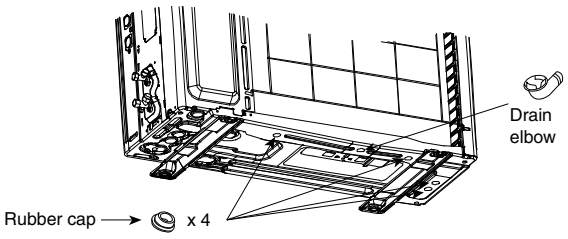

- If the unit is used in an area where temperature falls below 32°F (0°C) for 2 or 3 consecutive days, it is recommended not to use the Drain elbow and Rubber caps, water from defrost process will trap, freeze up and obstruct fan rotation. Water may drip from the basepan hole area during defrost function, do not stand or place objects underneath.

12. Installation Instruction

CS-XE18/24WKUAW CU-XE18/24WKUA

12.1 Select the Best Location

12.1.1 Indoor Unit

- Do not install the unit in excessive oil fume area such as kitchen, workshop and etc.
- There should not be any heat source or steam near the unit.
- There should not be any obstacles blocking the air circulation.
- A place where air circulation in the room is good.
- A place where drainage can be easily done.
- A place where noise prevention is taken into consideration.
- Do not install the unit near the door way.
- Ensure the spaces indicated by arrows from the wall, ceiling, fence or other obstacles.
- Indoor unit of this air conditioner shall be installed in a height of at least 5.9ft (1.8 m).

12.1.2 Outdoor Unit

- If an awning is built over the unit to prevent direct sunlight or rain, be careful that heat radiation from the condenser is not obstructed.
- There should not be any animal or plant which could be affected by hot air discharged.
- Keep the spaces indicated by arrows from wall, ceiling, fence or other obstacles.
- Do not place any obstacles which may cause a short circuit of the discharged air.
- If piping length is over the [piping length for additional gas], additional refrigerant should be added as shown in the table.
- Recommended installation height for outdoor unit should be above the seasonal snow level.
- Be careful not to locate outdoor unit directly under a roof line where falling snow or ice can cause damage or dripping water can increase ice accumulation and defrost cycles.

Model	Capacity (Btu/h)	Piping size		Std. Length	Max. Elevation	Min. Piping Length	Max. Piping Length	Additional Refrigerant	Piping Length for add. gas
		Gas	Liquid						
XE18****	17200	1/2" (12.7 mm)	1/4" (6.35 mm)	24.6 ft (7.5 m)	49.2 ft (15 m)	9.8 ft (3 m)	100.0 ft (30.5 m)	0.2 oz/ft (20 g/m)	32.8 ft (10 m)
XE24****	24000	5/8" (15.88 mm)							

Example: For XE18****
If the unit is installed at 41 ft (12.5 m) distance, the quantity of additional refrigerant should be 1.64 oz (50 g) .... (41 - 32.8) ft x 0.2 oz/ft = 1.64 oz. ((12.5 - 10) m x 20 g/m = 50 g).

12.1.3 Indoor/Outdoor Unit Installation Diagram

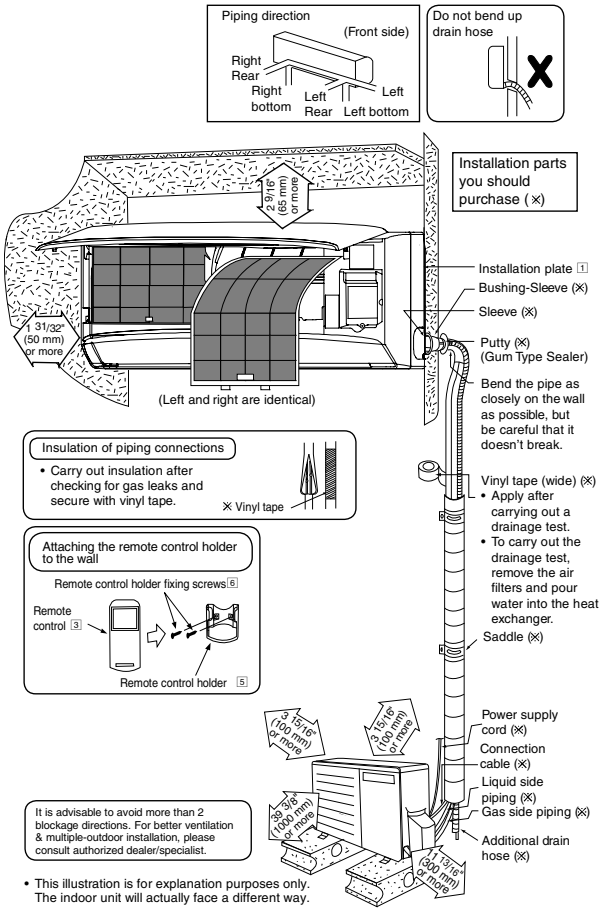

12.2 Indoor Unit

The mounting wall shall be strong and solid enough to prevent it from vibration.

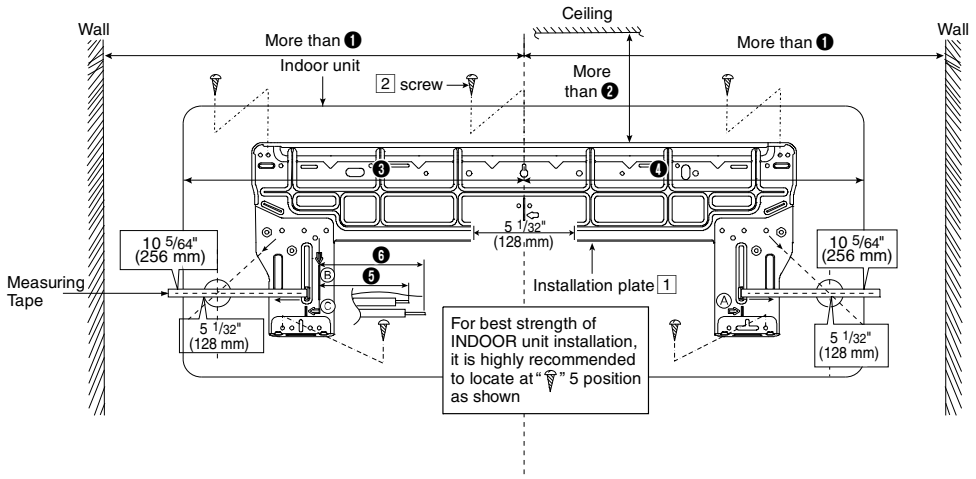

Model	Dimension					
	❶	❷	❸	❹	❺	❻
XE18****, XE24****	23-13/16" (605 mm)	3-3/4" (95 mm)	21-21/32" (550 mm)	21-21/32" (550 mm)	10-5/8" (270 mm)	12-19/32" (320 mm)

The center of installation plate should be at more than ① at right and left of the wall.
The distance from installation plate edge to ceiling should more than ②.
From installation plate left edge to unit's left side is ③.
From installation plate right edge to unit's right is ④.

Ⓑ : For left side piping, piping connection for liquid should be about ⑤ from this line.

: For left side piping, piping connection for gas should be about ⑥ from this line.

1 Mount the installation plate on the wall with 5 screws or more (at least 5 screws).
(If mounting the unit on the concrete wall, consider using anchor bolts.)
- Always mount the installation plate horizontally by aligning the marking-off line with the thread and using a level gauge.

2 Drill the piping plate hole with ø2-3/4" (ø70 mm) hole-core drill.
- Line according to the left and right side of the installation plate. The meeting point of the extended line is the center of the hole. Another method is by putting measuring tape at position as shown in the diagram above. The hole center is obtained by measuring the distance namely 5-1/16" (128 mm) for left and right hole respectively.
- Drill the piping hole at either the right or the left and the hole should be slightly slanting to the outdoor side.

12.2.1 To Drill a Hole in the Wall and Install a Sleeve of Piping

1 Insert the piping sleeve to the hole.
2 Fix the bushing to the sleeve.
3 Cut the sleeve until it extrudes about 19/32" (15 mm) from the wall.

⚠ CAUTION

❗ When the wall is hollow, please be sure to use the sleeve for tube assembly to prevent dangers caused by mice biting the connection cable.

4 Finish by sealing the sleeve with putty or caulking compound at the final stage.

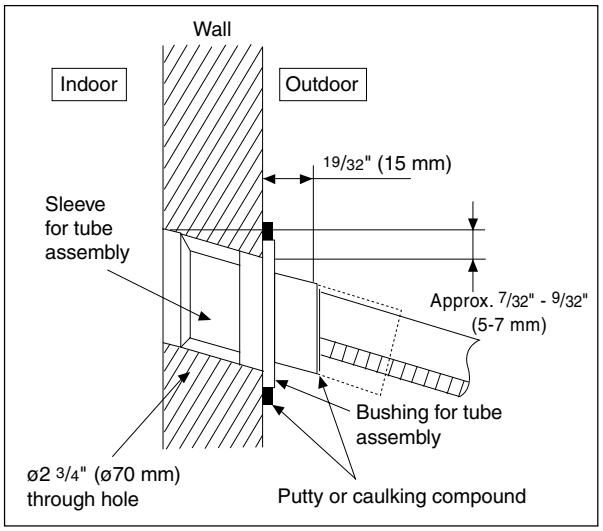

12.2.2 Indoor Unit Installation

- Do not turn over the unit without its shock absorber during pull out the piping. It may cause intake grille damage.
- Use shock absorber during pull out the piping to protect the intake grille from damage.

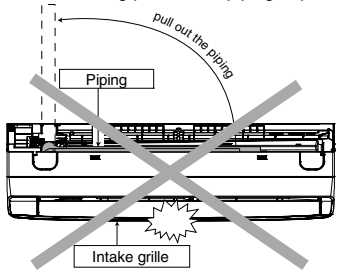

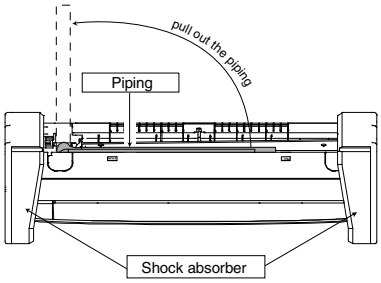

12.2.2.1 For the right rear piping

Step-1 Pull out the Indoor piping

Step-2 Install the Indoor Unit

Step-3 Secure the Indoor Unit

Step-4 Insert the connection cable

12.2.2.2 For the right bottom piping

Step-1 Pull out the Indoor piping

Step-2 Install the Indoor Unit

Step-3 Insert the connection cable

Step-4 Secure the Indoor Unit

12.2.2.3 For the embedded piping

Step-1 Replace the drain hose

Step-2 Bend the embedded piping

- Use a spring bender or equivalent to bend the piping so that the piping is not crushed.

Step-3 Pull the connection cable into Indoor Unit

- The inside and outside connection cable can be connected without removing the front grille.

Step-4 Cut and flare the embedded piping

- When determining the dimensions of the piping, slide the unit all the way to the left on the installation plate.
- Refer to the section “Cutting and flaring the piping”.

Step-5 Install the Indoor Unit

Step-6 Connect the piping

- Please refer to “Connecting the piping” column in outdoor unit section. (Below steps are done after connecting the outdoor piping and gas-leakage confirmation.)

Step-7 Insulate and finish the piping

- Please refer to “Insulation of piping connection” column as mentioned in indoor/outdoor unit installation.

Step-8 Secure the Indoor Unit

Right Rear piping

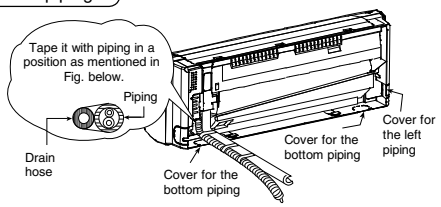

How to keep the cover

In case the cover is cut, keep the cover at the rear of chassis as shown in the illustration for future reinstallation.
(Left and 2 bottom covers for piping.)

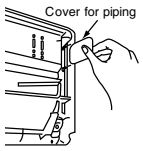

Right Bottom piping

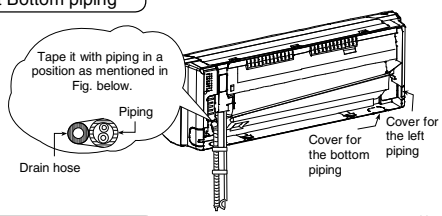

Install the indoor unit

Hook the indoor unit onto the upper portion of installation plate. (Engage the indoor unit with the upper edge of the installation plate). Ensure the hooks are properly seated on the installation plate by moving it in left and right.

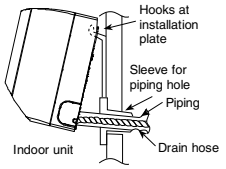

Secure the Indoor Unit

Press the lower left and right side of the unit against the installation plate until hooks engages with their slot (sound click).

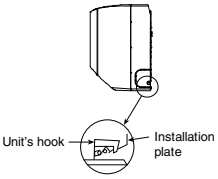

Insert the connection cable

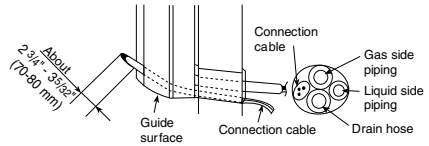

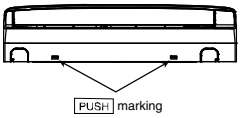

To take out the unit, push the PUSH marking at the bottom unit, and pull it slightly towards you to disengage the hooks from the unit.

(This can be used for left rear piping and bottom piping also.)

Exchange the drain hose and the cap

Rear view for left piping installation

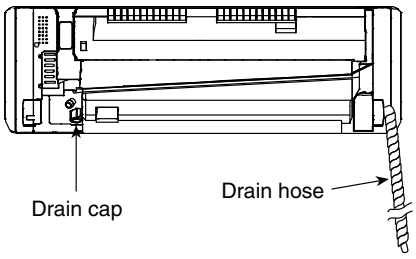

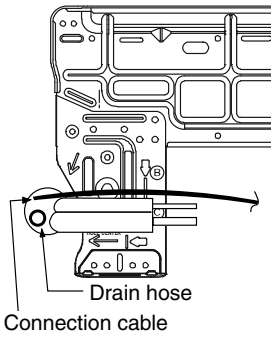

Adjust the piping slightly downwards.

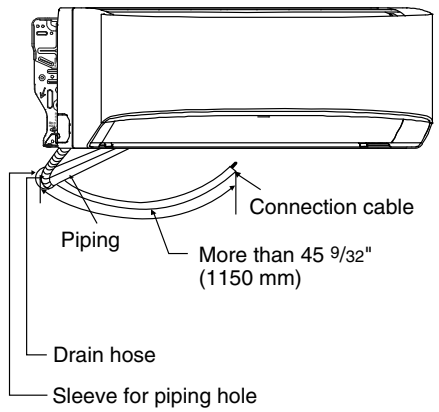

- How to pull the piping and drain hose out, in case of embedded piping.

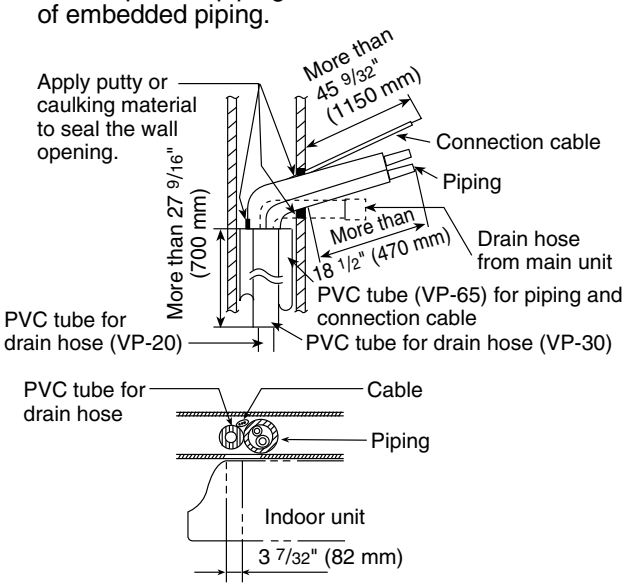

- In case of left piping how to insert the connection cable and drain hose.

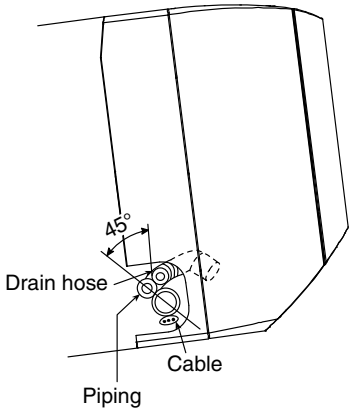

(For right piping, follow the same procedure)

Drain hose adapter 7 usage

- Join indoor drain hose to 3/4" (20 mm) nominal PVC pipe size by using drain hose adapter 7 when necessary.

Remarks :
Make sure indoor unit drain hose & 3/4" (20 mm) nominal PVC pipe are fully inserted to drain hose adapter 7.

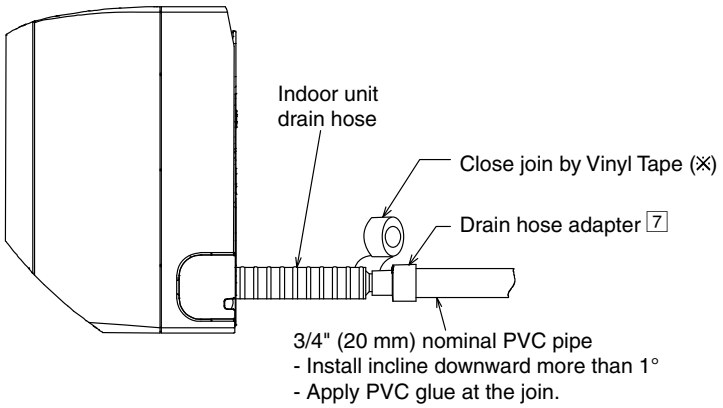

12.2.3 Connect the Cable to the Indoor Unit

1 The inside and outside connection cable can be connected without removing the front grille.
2 Unscrew the conduit cover and fix the conduit connector to conduit cover with lock nut, then secure it against chassis.
3 Connection cable between indoor unit and outdoor unit should be UL listed or CSA approved 4 conductor wires minimum AWG16 in accordance with local electric codes.
   - Ensure the colour of wires of outdoor unit and terminal number are the same as the indoor's respectively.

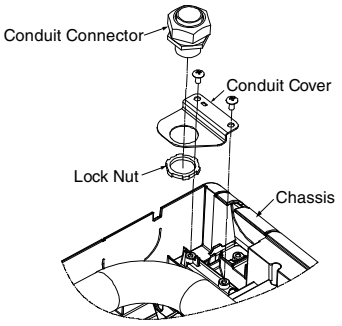

Rear Side of Indoor Unit

Terminals on the indoor unit	1	2	3	⏚
Colour of wires (connection cable)				
Terminals on the outdoor unit	1	2	3	⏚

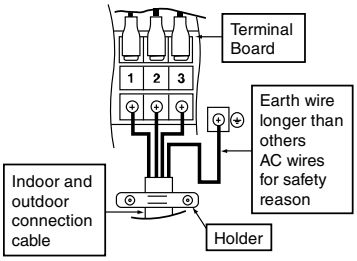

⚠ WARNING

⏚ This equipment must be properly earthed.

- Earth lead wire shall be Yellow/Green (Y/G) in colour and shall be longer than other lead wires as shown in the figure for electrical safety in case of slipping.

12.2.3.1 Wire Stripping and Connecting Requirement

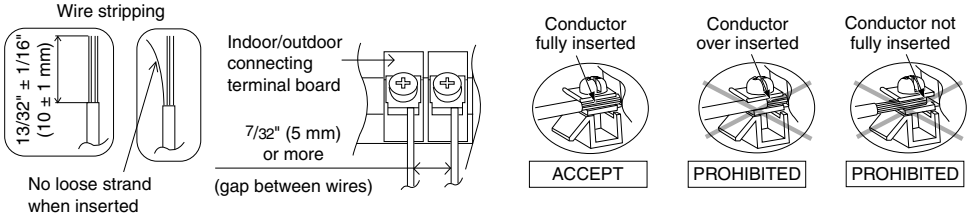

12.3 Outdoor Unit

12.3.1 Install the Outdoor Unit

- After selecting the best location, start installation according to Indoor/Outdoor Unit Installation Diagram.
  1 Fix the unit on concrete or rigid frame firmly and horizontally with a bolt nut ø13/32" (ø10 mm).
  2 When installing at roof, please consider strong wind and earthquake.
  Please fasten the installation stand firmly with bolt or nails.

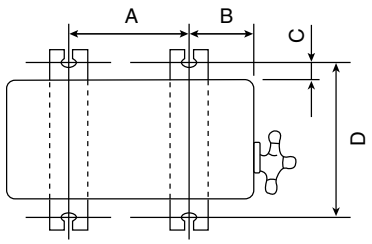

Model	A	B	C	D
XE18*** , XE24***	24-1/8" (613 mm)	5-5/32" (131 mm)	15/16" (24 mm)	14-3/16" (360.5 mm)

12.3.2 Connect the Piping

12.3.2.1 Connecting the Piping to Indoor

Please make flare after inserting flare nut (locate at joint portion, of tube assembly) onto the copper pipe. (In case of using long piping)
Connect the piping

- Align the center of piping and sufficiently tighten the flare nut with fingers.
- Further tighten the flare nut with torque wrench in specified torque as stated in the table.

Do not over tighten, over tightening may cause gas leakage	
Piping size	Torque
1/4" (6.35 mm)	13.3 lbf.ft [18N•m (1.8 kgf.m)]
3/8" (9.52 mm)	31.0 lbf.ft [42 N•m (4.3 kgf.m)]
1/2" (12.7 mm)	40.6 lbf.ft [55 N•m (5.6 kgf.m)]
5/8" (15.88 mm)	47.9 lbf.ft [65 N•m (6.6 kgf.m)]
3/4" (19.05 mm)	73.8 lbf.ft [100 N•m (10.2 kgf.m)]

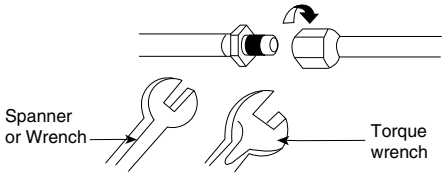

12.3.2.2 Connecting the Piping to Outdoor

Decide piping length and then cut by using pipe cutter.
Remove burrs from cut edge.
Make flare after inserting the flare nut (located at valve) onto the copper pipe.
Align center of piping to valve and then tighten with torque wrench to the specified torque as stated in the table.

12.3.2.3 Gas leak checking

Pressure test to system to 400 PSIG with dry nitrogen, in stages. Thoroughly leak check the system.
If the pressure holds, release the nitrogen and proceed to section 12.3.3.

12.3.3 Evacuation of the Equipment

WHEN INSTALLING AN AIR CONDITIONER, BE SURE TO EVACUATE THE AIR INSIDE THE INDOOR UNIT AND PIPES in the following procedure.

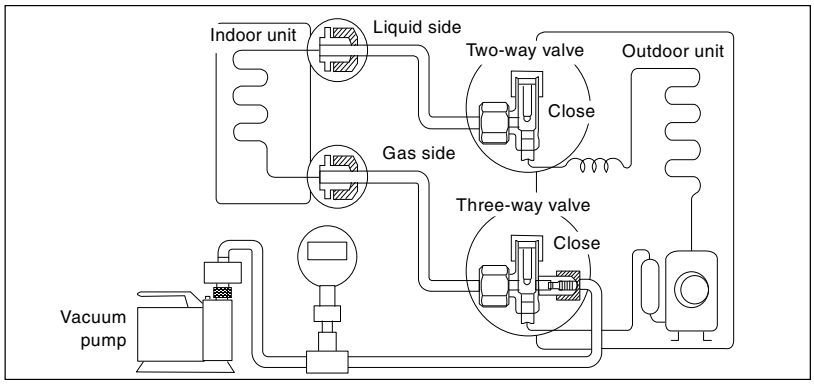

1 Connect a charging hose with a push pin to the Low side of a charging set and the service port of the 3-way valve.
2 Connect the micron gauge between vacuum pump and service port of outdoor units.
3 Turn on the power switch of the vacuum pump and make sure that connect digital micron gauge and to pull down to a value of 500 microns.
4 To make sure micron gauge a value 500 microns and close the low side valve of the charging set and turn off the vacuum pump.
5 Disconnect the vacuum pump house from the service port of the 3-way valve.
6 Tighten the service port caps of the 3-way valve at a torque of 13.3 lbf.ft (18 N•m) with a torque wrench.
7 Remove the valve caps of both of the 2-way valve and 3-way valve. Position both of the valves to “Open” using a hexagonal wrench (5/32" (4 mm)).
8 Mount valve caps onto the 2-way valve and the 3-way valve.
   - Be sure to check for gas leakage.

- If micron gauge value does not descend 500 microns, take the following measures:
- If the leak stops when the piping connections are tightened further, continue working from step ③.
- If the leak does not stop when the connections are retightened, repair location of leak.
- Do not release refrigerant during piping work for installation and reinstallation.
- Be careful with the liquid refrigerant, it may cause frostbite.

12.3.4 Connect the Cable to the Outdoor Unit

1 Remove control board cover (Resin and Metal).
2 Remove particular plate.
3 Remove plugs.
4 Fix the conduit connectors to the knockout holes with lock-nuts, then secure them against the side panel.
5 All wires pass through conduits & particular plate’s opening hole.
6 Connecting wire between indoor unit and outdoor unit should be UL listed or CSA approved 4 conductor wires minimum AWG16 in accordance with local electric codes.
7 Wire connection to the power supply (208/230V 60Hz) through circuit breaker.
   - Connect the UL listed or CSA approved wires minimum AWG12 to the terminal board, and connect the other end of the wires to ELCB/ GFCI.
8 Connect the power supply cord and connecting wire between indoor unit and outdoor unit according to the diagram below.

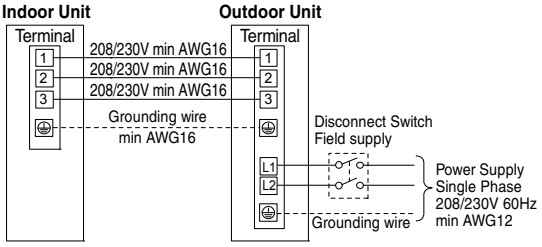

9 Secure the wire onto the control board with the holder (clamper).
10 After completing wiring connections, reattach the particular plate and control board cover (metal and resin) to the original position with the screws.
11 For wire stripping and connection requirement, refer to instruction 12.2.3 of indoor unit

⚠ WARNING
⏚ This equipment must be properly earthed.

- Earth lead wire shall be Yellow/Green (Y/G) in colour and should be longer than other lead wires as shown in the figure for electrical safety in case of slipping.

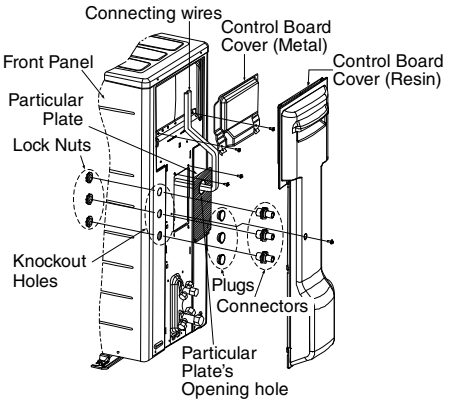

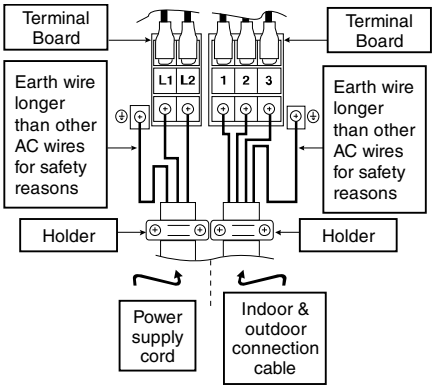

12.3.5 Piping Insulation

1 Please carry out insulation at pipe connection portion as mentioned in Indoor/Outdoor Unit Installation Diagram. Please wrap the insulated piping end to prevent water from going inside the piping.
2 If drain hose or connecting piping is in the room (where dew may form), please increase the insulation by using POLY-E FOAM with thickness 1/4" (6 mm) or above.

12.3.5.1 Cutting and flaring the piping

1 Please cut using pipe cutter and then remove the burrs.
2 Remove the burrs by using reamer. If burrs are not removed, gas leakage may be caused. Turn the piping end down to avoid the metal powder entering the pipe.
3 Please make flare after inserting the flare nut onto the copper pipes.

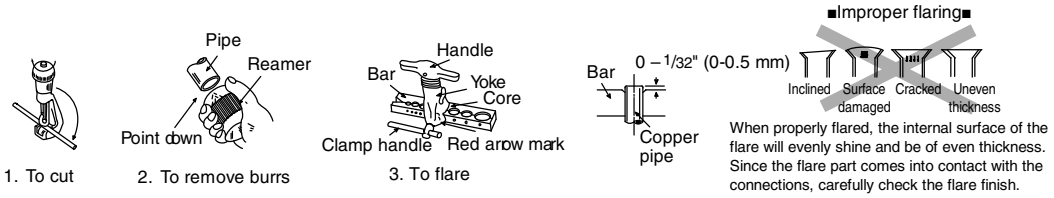

12.3.6 Disposal of Outdoor Unit Drain Water

The unit should be mounted on a stand that suits to a local environmental requirement.

- When the Drain elbow being used, please ensure to:-
  - Provide a minimum clearance of 2" (50mm) to access the bottom of base pan.
  - Seal the four 25/32" (20mm) diameter holes with Rubber caps (refer to illustration below).
  - Use a rigid or flexible PVC pipe (local supply) to dispose drained water from the elbow or use a stainless steel tray (local supplied) to collect and dispose water.

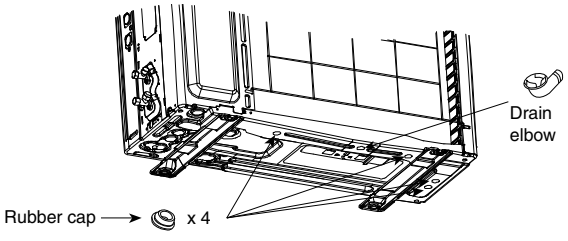

- If the unit is used in an area where temperature falls below 32°F (0°C) for 2 or 3 consecutive days, it is recommended not to use the Drain elbow and Rubber caps, water from defrost process will trap, freeze up and obstruct fan rotation. Water may drip from the basepan hole area during defrost function, do not stand or place objects underneath.

13. Operation Control

13.1 Basic Function

Inverter control, which equipped with a microcomputer in determining the most suitable operating mode as time passes, automatically adjusts output power for maximum comfort always. In order to achieve the suitable operating mode, the microcomputer maintains the set temperature by measuring the temperature of the environment and performing temperature shifting. The compressor at outdoor unit is operating following the frequency instructed by the microcomputer at indoor unit that judging the condition according to internal setting temperature and intake air temperature.

13.1.1 Internal Setting Temperature

Once the operation starts, remote control setting temperature will be taken as base value for temperature shifting processes. These shifting processes are depending on the air conditioner settings and the operation environment. The final shifted value will be used as internal setting temperature and it is updated continuously whenever the electrical power is supplied to the unit.

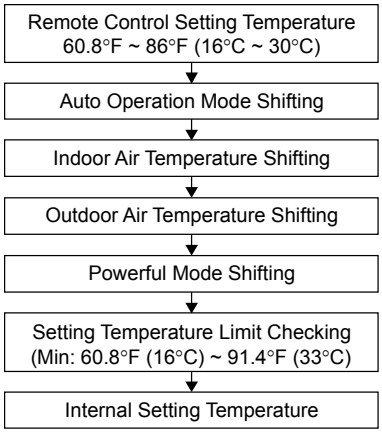

13.1.2 Cooling Operation

13.1.2.1 Thermostat control

- Compressor is OFF when Intake Air Temperature - Internal Setting Temperature < -2.7°F (-1.5°C) continue for 3 minutes.
- When compressor is OFF (Thermostat OFF) and AUTO FAN is set, the fan will stop periodically.
- Compressor is ON after waiting for 3 minutes, if the Intake Air Temperature - Internal Setting Temperature > Compressor OFF point.

13.1.3 Soft Dry Operation

13.1.3.1 Thermostat control

- Compressor is OFF when Intake Air Temperature - Internal Setting Temperature < -3.6°F (-2.0°C) continue for 3 minutes.
- When compressor is OFF (Thermostat OFF) and AUTO FAN is set, the fan will stop periodically.
- Compressor is ON after waiting for 3 minutes, if the Intake Air Temperature - Internal Setting Temperature > Compressor OFF point.

13.1.4 Heating Operation

13.1.4.1 Thermostat control

- Compressor is OFF when Intake Air Temperature - Internal Setting Temperature > +3.6°F (+2.0°C) continue for 3 minutes.
- Compressor is ON after waiting for 3 minutes, if the Intake Air Temperature - Internal Setting Temperature < Compressor OFF point.

13.1.5 Automatic Operation

- This mode can be set using remote control and the operation is decided by remote control setting temperature, remote control operation mode and indoor intake air temperature.
- During operation mode judgment, indoor fan motor (with speed of Lo-) is running for 30 seconds to detect the indoor intake air temperature.
- Every 10 minutes, the indoor temperature is judged.
- For the 1st judgment
  - If indoor intake temperature - remote control setting temperature ≥ 3.6°F (2°C), COOL mode is decided.
  - If -3.6°F (-2°C) ≤ indoor intake temperature - remote control setting temperature < 3.6°F(2°C), DRY mode is decided.
  - If indoor intake temperature - remote control setting temperature < -3.6°F (-2°C), HEAT mode is decided.

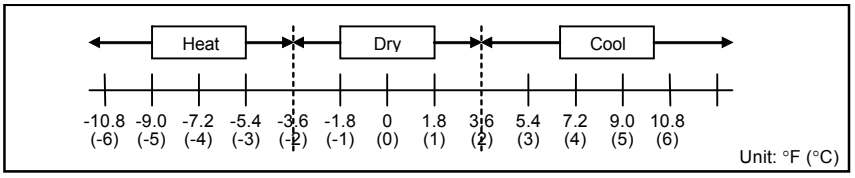

- For the 2nd judgment onwards
  - If indoor intake temperature - remote control setting temperature ≥ 5.4°F (3°C), if previous operate in DRY mode, then continue in DRY mode. otherwise COOL mode is decided.
  - If -3.6°F (-2°C) ≤ indoor intake temperature - remote control setting temperature < 5.4°F (3°C), maintain with previous mode.
  - If indoor intake temperature - remote control setting temperature < -3.6°F (-2°C), HEAT mode is decided.

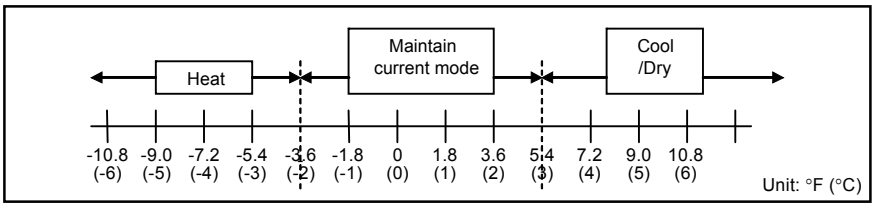

13.1.6 Fan Operation

- Fan Operation is used to circulate air in a room.
- During operation, indoor fan run continuously but outdoor fan and compressor stop.
- Temperature setting is not applicable.

13.2 Indoor Fan Motor Operation

13.2.1 Basic Rotation Speed (rpm)

A. Basic Rotation Speed (rpm)

i. Manual Fan Speed

[Cooling, Dry]

- Fan motor's number of rotation is determined according to remote control setting.

Remote control	○	○	○	○	○
Tab	Hi	Me+	Me	Me-	Lo

[Heating]

- Fan motor's number of rotation is determined according to remote control setting.

Remote control	○	○	○	○	○
Tab	SHi	Me+	Me	Me-	Lo

ii. Auto Fan Speed

[Cooling, Dry]

- According to room temperature and setting temperature, indoor fan speed is determined automatically.
- When set temperature is not achieved, the indoor fan will operate according to pattern below.

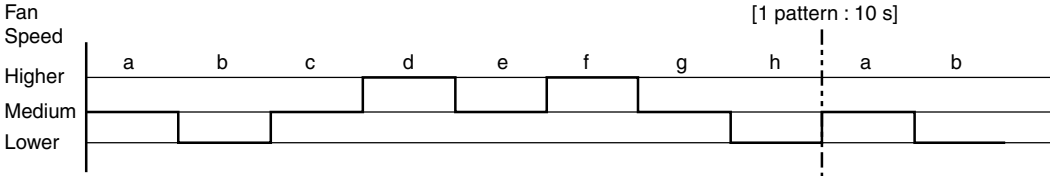

- When set temperature achieved, the indoor fan speed will be fixed. When thermostat off, the fan stop periodically.

[Heating]

- According to indoor pipe temperature, automatic heating fan speed is determined as follows.

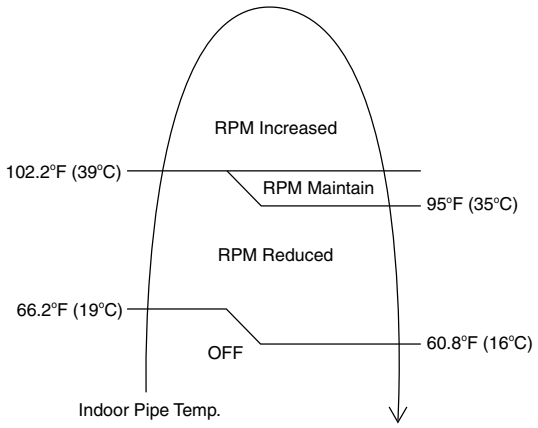

B. Feedback control

- Immediately after the fan motor started, feedback control is performed once every second.
- During fan motor on, if fan motor feedback ≥ 2550 rpm or < 50 rpm continue for 10 seconds, then fan motor error counter increase, fan motor is then stop and restart. If the fan motor counter becomes 7 times, then H19 - fan motor error is detected. Operation stops and cannot on back.

13.3 Outdoor Fan Motor Operation

- It starts when compressor starts operation and it stops 30 seconds after compressor stops operation.

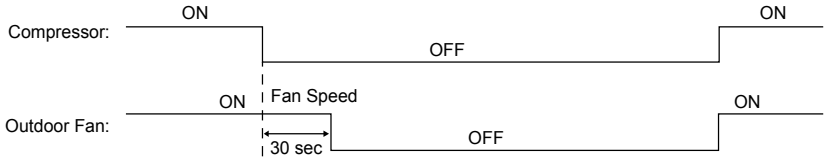

- During cooling operation, and outdoor ambient temperature is below 46.4°F (8°C), outdoor fan speed will be controlled according to outdoor piping temperature as following:

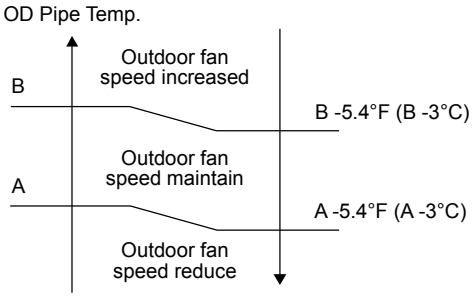

	OD Pipe Temperature
A	78.8°F (26°C)
B	91.4°F (33°C)

- During above condition, when indoor heat exchanger temperature is below 41°F (5°C), the outdoor fan will stop according to outdoor piping temperature as following:

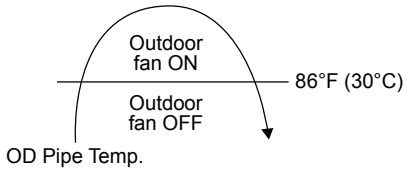

13.4 Airflow Direction

- There are two types of airflow, vertical airflow (directed by horizontal vane) and horizontal airflow (directed by vertical vanes).
- Control of airflow direction can be automatic (angles of direction is determined by operation mode, heat exchanger temperature and intake air temperature) and manual (angles of direction can be adjusted using remote control).

13.4.1 Vertical Airflow

13.4.1.1 CS-XE9WKUAW CS-XE12WKUAW CS-XE15WKUAW

Operation Mode	Airflow Direction		Upper Vane Angle (°)					Lower Vane Angle (°)				
			1	2	3	4	5	1	2	3	4	5
Heating	Auto with Heat Exchanger Temperature	A	67					63				
		B	95					92				
		C	67					63				
	Manual		67	83	88	95	110	63	75	85	92	105
Cooling and Fan	Auto		65 ~ 115					58 ~ 100				
	Manual		65	67	94	100	115	58	63	70	80	100
Soft Dry	Auto		65 ~ 115					58 ~ 100				
	Manual		65	67	94	100	115	58	63	70	80	100

1. Automatic vertical airflow direction can be set using remote control; the vane swings up and down within the angles as stated above. For heating mode operation, the angle of the vane depends on the indoor heat exchanger temperature as Figure 1 below. It does not swing during fan motor stop. When the air conditioner is stopped using remote control, the vane will shift to close position.
2. Manual vertical airflow direction can be set using remote control; the angles of the vane are as stated above and the positions of the vane are as Figure 2 below. When the air conditioner is stopped using remote control, the vane will shift to close position.

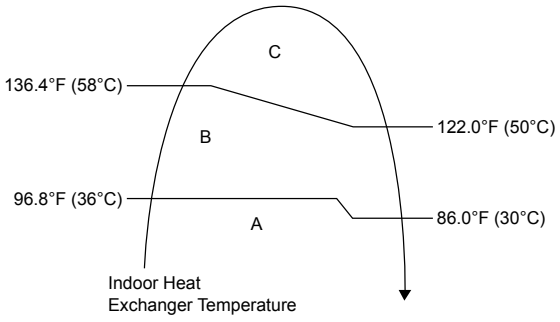

Figure 1

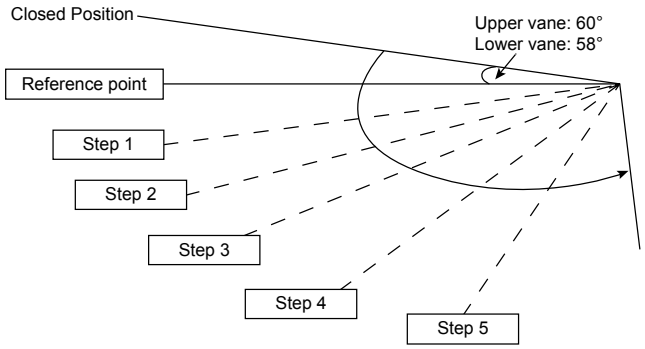

Figure 2

13.4.1.2 CS-XE18WKUAW CS-XE24WKUAW

Operation Mode	Airflow Direction		Inner Vane Angle (°)					Outer Vane Angle (°)				
			1	2	3	4	5	1	2	3	4	5
Cooling	Auto		140 ~ 90					47 ~ 74				
	Manual		140	135	120	105	90	47	58	64	69	74
Soft Dry	Auto		140 ~ 90					47 ~ 74				
	Manual		140	135	120	105	90	47	58	64	69	74
Heating	Auto	A	140					50				
		B	90					78				
		C	135					58				
	Manual		140	135	112	90	80	50	58	69	78	90

1. Automatic vertical airflow direction can be set using remote control; the vane swings up and down within the angles as stated above. For heating mode operation, the angle of the vane depends on the indoor heat exchanger temperature as Figure 1 below. It does not swing during fan motor stop. When the air conditioner is stopped using remote control, the vane will shift to close position.
2. Manual vertical airflow direction can be set using remote control; the angles of the vane are as stated above and the positions of the vane are as Figure 2 below. When the air conditioner is stopped using remote control, the vane will shift to close position.

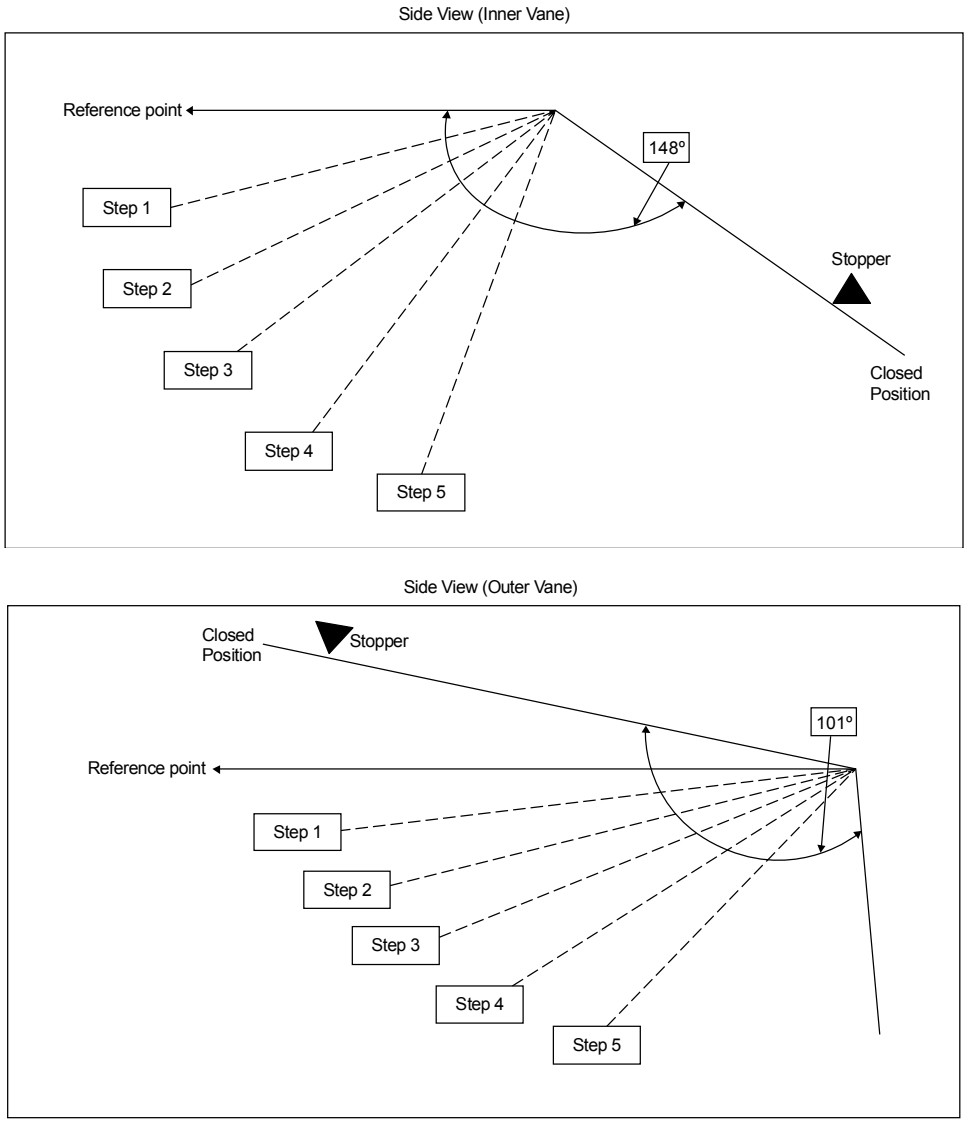

Figure 2

*** The horizontal vane angle tolerance is within +/- 5 degree.**

13.4.2 Horizontal Airflow

- Automatic horizontal airflow direction can be set using remote control; the vane swings left and right within the angles as stated below. For heating mode operation, the angle of the vane depends on the indoor heat exchanger temperature as Figure 1 below. It does not swing during fan motor stop.

Operation Mode		Vane Angle (°)
Heating, with heat exchanger temperature	A	65 ~115
	B	90
Cooling and soft dry		65 ~115

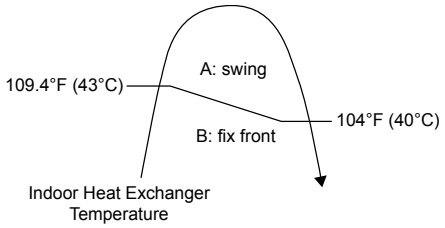

Figure 1

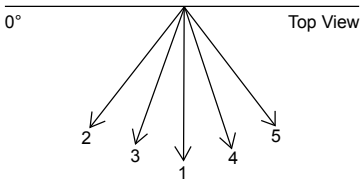

Figure 2

- Manual horizontal airflow direction can be set using remote control; the angles of the vane are as stated below and the positions of the vane are as Figure 2 above.

Pattern	1	2	3	4	5
Airflow Direction Patterns at Remote Control					
Vane Angle (°)	90	65	77.5	102.5	115

13.5 Quiet operation (Cooling Mode/Cooling area of Dry Mode)

- Purpose
  - To provide quiet cooling operation condition.

- Control condition
  - Quiet operation start condition
    - When FAN SPEED/QUIET button at remote control is pressed continuously until QUIET will be shown on remote control display.

  - Quiet operation stop condition
    - POWERFUL button is pressed.
    - Stop by OFF/ON switch.
    - Timer OFF activates.
    - When FAN SPEED/QUIET button is pressed again.

- Control contents
  - Fan speed is changed to QLo.
  - When quiet operation is stopped, operation is shifted to normal operation with previous setting.
  - When operation mode is changed, quiet operation is shifted to quiet operation of the new mode.
  - After off, when on back, quiet operation is memorized.

13.6 Powerful Mode Operation

- When the powerful mode is selected, the internal setting temperature will shift lower up to 3.6°F (2°C) (for Cooling/Soft Dry) or higher up to 6.3°F (3.5°C) (for Heating) than remote control setting temperature for 20 minutes to achieve the setting temperature quickly.

13.7 Timer Control

- There are 2 sets of ON and OFF timer available to turn the unit ON or OFF at different preset time.
- If more than one timer had been set, the upcoming timer will be displayed and will activate in sequence.

13.7.1 ON Timer Control

- ON timer 1 and ON timer 2 can be set using remote control, the unit with timer set will start operate earlier than the setting time.
  This is to provide a comfortable environment when reaching the set ON time.
- 60 minutes before the set time, indoor (at fan speed of Lo-) and outdoor fan motor start operate for 30 seconds to determine the indoor intake air temperature and outdoor air temperature in order to judge the operation starting time.
- From the above judgment, the decided operation will start operate earlier than the set time as shown below.

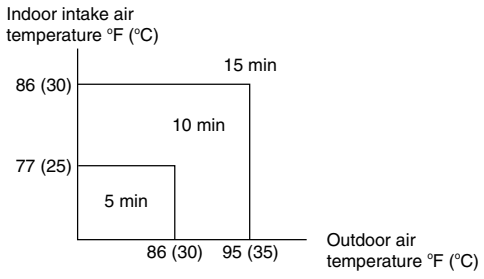

Cooling/Soft Dry

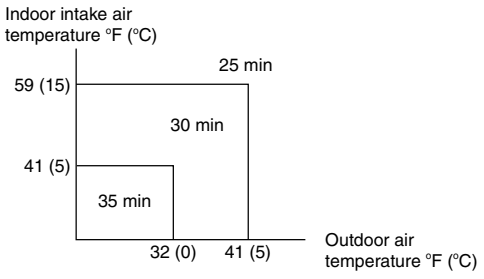

Heating

13.7.2 OFF Timer Control

OFF timer 1 and OFF timer 2 can be set using remote control, the unit with timer set will stop operate at set time.

13.8 Auto Restart Control

- When the power supply is cut off during the operation of air conditioner, the compressor will re-operate within three to four minutes (there are 10 patterns between 2 minutes 58 seconds and 3 minutes 52 seconds to be selected randomly) after power supply resumes.
- This type of control is not applicable during ON/OFF Timer setting.
- This control can be omitted by open the circuit of JP1 at indoor unit printed circuit board.

13.9 Indication Panel

LED	POWER	TIMER	RFP		nanoeX
Color	Green	Orange	Green	Blue	Blue
Light ON	Operation ON	Timer Setting ON	RFP ON	ON	nanoeX ON
Light OFF	Operation OFF	Timer Setting OFF	RFP OFF	OFF	nanoeX OFF

Note:

- If POWER LED is blinking, the possible operation of the unit are Hot Start, during Deice operation, operation mode judgment, or ON timer sampling.
- If Timer LED is blinking, there is an abnormality operation occurs.

13.10 Room Freeze Protection Function (RFP) Operation

- When the RFP is selected, the unit will operate the fan at high speed for proper room temperature monitoring. When the sensor detects that the room temperature has dropped below 46°F / 8°C, the compressor/heat pump operation begins.
- When the room temperature reaches 50°F / 10°C, the unit shuts off, then will repeat continuously if the temperature drops below 46°F / 8°C again.

<Disclaimer>

This function may not be performed if the unit is not energized, or under a certain condition that unit is unable to operate such as in protection mode. Please consult with the HVAC installers or professional for details.

- The Room Freeze Protection function (RFP) cannot be used unless the unit is energized and set into the RFP mode.
- In the advent of a power failure this mode will not function. During the RFP mode, POWERFUL OPERATION, QUIET OPERATION and FAN SPEED selection are all disabled. Please consult with your HVAC installer or professional for more details.

13.11 nanoe™ X Operation

- Generate nanoe™ X (water wrapped ion particle) to moisturize skin, provide deodorization & sterilization effect.

- nanoe™ X operation start condition
  - During unit running at any operation mode, if nanoe™ X operation is activated, combination operation (operation mode + nanoe™ X operation) starts.
  - During unit is OFF, if nanoe™ X operation is activated, nanoe™ X individual operation starts.

- nanoe™ X operation stop condition
  - When OFF/ON button is pressed to stop the operation.
  - When nanoe™ X button is pressed.
  - When OFF Timer activates.

- nanoe™ X operation pause condition
  - When indoor fan stop (during deice, odor cut control, thermostat off, etc.). nanoe™ X operation resume after indoor fan restarts.
  - When indoor intake temperature ≥ 35°C and ≤ 5°C. nanoe™ X operation resume after indoor intake temperature < 35°C or ≥ 5°C continuously for 6 minutes.

- Indoor fan control
  - During any operation mode combines with nanoe™ X operation, fan speed follows respective operation mode. However, nanoe™ X system enabled when fan speed ≥ 360 rpm to ensure proper negative ion distribution, nanoe™ X system disabled when fan speed < 360 rpm.
  - During nanoe™ X individual operation, fan speed follow remote control setting. Auto Fan Speed for nanoe™ X individual operation is cooling medium fan. Powerful & Quiet is disabled during nanoe™ X.

- Airflow direction control
  - During any operation mode combines with nanoe™ X operation, airflow direction follows respective operation mode.
  - During nanoe™ X individual operation, Air Swing follow remote control setting.

- Timer control
  - When ON Timer activates when unit stops, previous operation resumes and restored last saved nanoe™ X operation status.
  - When ON Timer activates during any operation, no change on current operation.
  - When OFF Timer activates during any operation, all operation stops and the latest nanoe™ X operation status is saved.

- Indicator
  - When nanoe™ X starts, nanoe™ X indicator ON.

- Remote control receiving sound
  - Normal operation ➔ nanoe™ X Operation : Beep
  - nanoe™ X Operation ➔ Normal operation : Beep
  - Stop ➔ nanoe™ X individual Operat : Beep
  - nanoe™ X individual Operation ➔ Stop : Long Beep

- Power failure
  - During nanoe™ X individual operation, if power failure occurs, after power resumes, nanoe™ X individual operation resumes immediately.
  - During combination operation, if power failure occurs, after power resumes, combination operation resume immediately.

- nanoe™ X check mode
  - To enable nanoe™ X check mode, during nanoe™ X operation ON:

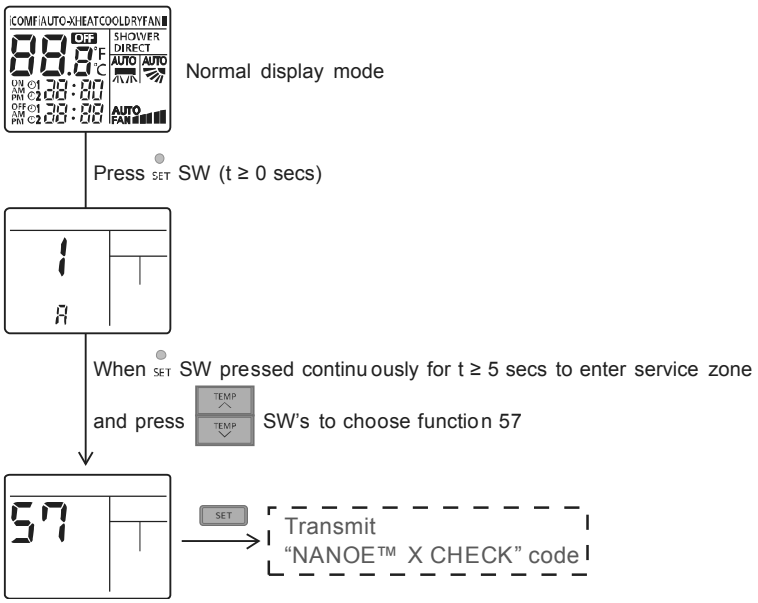

  - During nanoe™ X check mode, H67 is judged when disconnection detected. Timer LED blinks.

- nanoe™ X Abnormal Detection
  - Disconnection Abnormality
    - Abnormal detection condition
      - Start from 1 sec after nanoe™ X power ON, 6 secs has passed and in this 6 secs period, abnormal signal is detected continuously for 5.9 secs.
    - Action after abnormal detection condition fulfilled
      - Disconnection counters +1, nanoe™ X power OFF for 5 minutes and then restart. However, according to action mode and disconnection counter, below will be implemented:
        - During nanoe™ X Check Mode: Disconnection abnormality will judged when disconnection counter ≥ 1. Abnormal code: H67 will memorized in EEPROM, Timer LED blinking and nanoe™ X LED Off.
        - Other Than Above: Disconnection abnormality will judged when disconnection counter ≥ 3. Abnormal code: H67 will memorized in EEPROM and nanoe™ X LED OFF, Timer LED not blinking.
    - Disconnection counters clear condition >
      - Disconnection counter will be cleared when operation stop. (Not nanoe™ X Check Mode)

  - nanoe™ X Discharge Abnormality
    - Abnormal detection condition
      - After 30 minutes nanoe™ X power ON, abnormal signal is being detected continuously for 5s.
    - Action after abnormal detection condition fulfilled
      - Abnormal discharge counter +1, nanoe™ X power OFF for 30 minutes and then restart. When abnormal discharge counter ≥ 12, abnormal code: H67 in analyze area (Area where abnormal code not displayed) will be memorized.
    - Abnormal discharge counters clear condition
      - Discharge counter will be cleared when operation become normal for 50 mins above or when operations stop.

13.12 Wireless LAN Control

13.12.1 System Overview

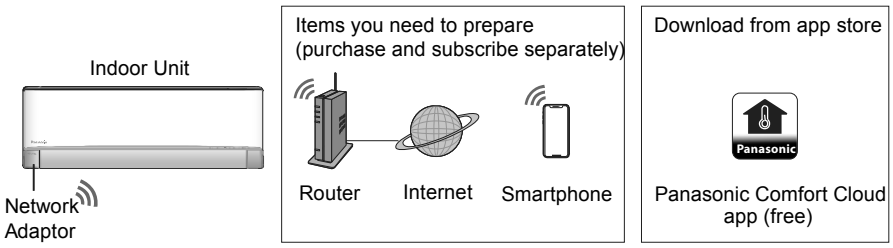

- Requires the APP to work with a smartphone with Android 4.4 and above, or iOS 9 and above. However, there is no guarantee that the APP will work well with all Android OS version.
- The Network Adaptor is designed specifically as a terminal for Panasonic Comfort Cloud app.
- The Wireless LAN network coverage must reach the air conditioner installation location.

Specification

Network Adaptor	Wireless LAN Module (built-in)
Model	DNSK-P11
Input Voltage	DC 5V (From Air Conditioner Indoor Unit)
Current Consumption	Tx/Rx max. 290/100 mA
Wireless LAN standard	IEEE 802.11 b/g/n
Frequency range	2.4 GHz band
Encryption	WPA2-PSK (TKIP/AES)

Precaution

- Do NOT disassemble or alter this Network Adaptor in any way.
- Do NOT remove this Network Adaptor from the appliance product's during operations.
- Data transmitted and received over radio waves may be intercepted and monitored.

Maximum radio-frequency power transmitted in the frequency bands

Type of wireless	Frequency band	Max. EIRP (dBm)
WLAN	12 - 2472 MHz	20 dBm

13.12.2 Connecting Network

- Press to communicate with the home wireless LAN access point.
- Wireless LAN LED blinks to indicate the connection status to home access point.

Fast blink	The unit is establishing the connection.
Slow blink	The unit is not securing the connection.
No blink (stays on)	The unit is has established the connection.

- It can establish the connection to the unit even If the unit turned OFF.

13.12.3 Application Installation

For Android user (Android 4.4 and above)	For iOS user (iOS 9 and above)
• Open GET IT ON Google Play.	• Open Download on the App Store.
• Search for Panasonic Comfort Cloud app.	• Search for Panasonic Comfort Cloud app.
• Download and install.	• Download and install.

Note

- The app user interface image may change for version upgrade without notification.
- There is no charge for using this application. However, other charges may be incurred for connection and operation.

13.12.4 To Disconnect Wireless LAN (Off Wireless LAN LED)

- Press and release one time at the Remote Control Wireless LAN button and the LED will turn off. (LED ON -> LED OFF).

13.12.5 To Delete Wireless LAN Information

- If Wireless LAN is off (LED is Off), turn on Wireless LAN first by press and release one time the Wireless LAN button. (LED OFF -> LED ON).
- Push Wireless LAN button for 5 seconds.
- In the Remote Control Operation select "5" and push for 3 seconds.
- Initialization is finish and Wireless LAN LED will off automatically.

13.12.6 To Check Wireless Lan Signal Strength

- Confirm the air conditioner operation is stopped and press the Wireless LAN button for 5 seconds.
- Select "4" in the remocon then press set button and operation stops.
- After 5 seconds, the signal strength is shown on the indoor unit Wireless LAN LED.
  Strong Signal: Blink 3 times with an interval.
  Moderate Signal: Blink 2 times with an interval.
  Weak Signal: Blink once with an interval.
  No Signal: OFF.
- It will stop automatically after 10 minutes. To stop immediately, press Wireless LAN button.

13.12.7 Wireless LAN Failure Diagnosis

13.12.7.1 Between ID Micon and Wireless LAN Module Failure Detect Condition

- When module and ID micon (CN-LAN) communication is following below condition.
  - No response against sending data.
  - Reply error against sending data.
  - Regularly sending from AC unit (Every 1 minutes).

- Either one from above condition occur, detection will start.
- If for certain time there is no communication and retry is implemented 3 times continuously confirm the error by following below table.
- When failure diagnosis H85 occur.

	Wireless LAN LED	Timer LED
When error condition check	Light up	No light
When retry	Light up	No light
After confirm failure	No light	Blinking

- Cancel Condition: From the module the reply data or the regularly sending data (normal data) is recognized by ID micon.

	Wireless LAN LED	Timer LED
When failure canceled	Light up	No light

- Failure communication parameter setting.

H85 communication error: time/retry counter	10 min/3 count
Wireless LAN disconnection judgment time	300 sec

13.12.8 Between ID AC and Broadband Router Failure Detect Condition

- Detect condition: Communication with router is interrupted.
- Confirm condition: The interrupted condition continue more than 5 minutes and retry is implemented.
- After confirm the failure operation: Not H85 error display and Wireless LAN LED is blinking.
- Cancel condition: Communication is return between Wireless LAN router.
- After cancel, return to normal operation and Wireless LAN LED is light up.

13.13 Electric Heater Control 1

- Starting condition
  - When all condition (1+2+3+4+5+6+7) are fulfilled.
    - Operation ON
    - Indoor Heating mode
    - Thermostat ON
    - Temperature different control

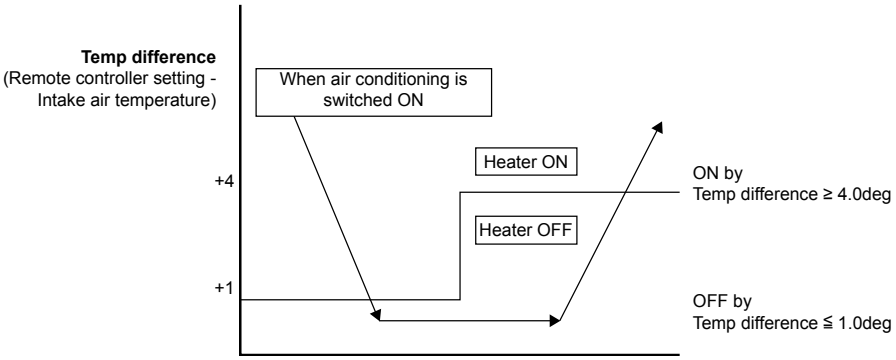

Example:
a. When air conditioning is switch ON,
Remote controller setting =28°C
Intake air temperature = 26°C
Temp difference = 28-26 =2°C
Heater ON
b. After a while when
Remote controller setting =28°C
Intake air temperature = 27°C
Temp difference = 28-27 =1°C
Heater OFF
c. After a while when
Temp difference more than or same as 4°C
Heater ON

- Intake air temperature control

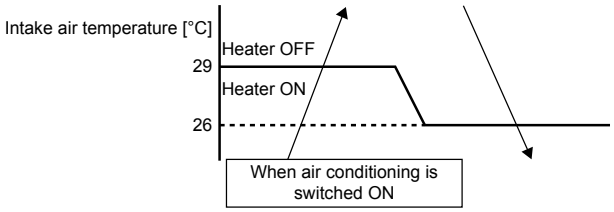

- Evaporator pipe sensor control

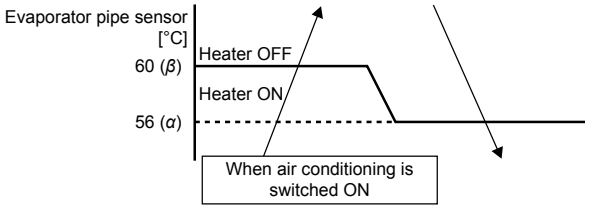

- Indoor Fan speed more than or same as Lo Fan

- Control content
  - Electric heater will be switch ON when all condition for starting condition fulfilled.
  - Once Electric heater switched ON, It will operate at least 3 minutes.

13.14 Electric Heater Control 2

- During Error happened, air conditioning unit will stop operation, TIMER LED will blink and indoor vane closed.
- Electric heater can be switch ON when fullfill the starting condition as follow except 2 errors.
  - H14 (Indoor intake air temperature sensor abnormality)
  - H19 (Indoor fan motor mechanism lock)

- Starting condition
  When all condition (1+2+3+4) are fulfilled.
  - Operation ON
  - Indoor Heating mode
  - Error happened Except error H14 and H19
  - Temperature different control

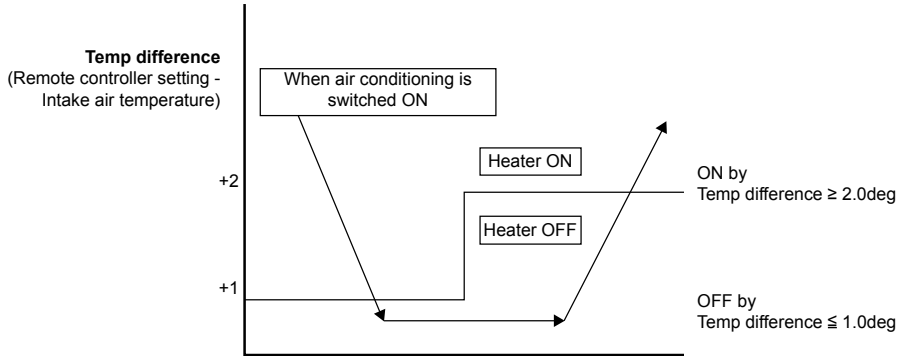

- Control content
  - Indoor unit will start operate when receive operation ON signal from remote controller.
  - Indoor fan speed
    - For error

H23 - Indoor heat exchange sensor 1 abnormality
H24 - Indoor heat exchange sensor 2 abnormality
H27 - Outdoor air temperature sensor abnormality
H28 - Outdoor heat exchange sensor abnormality

Me Fan
(Fan speed higher than other error because the outdoor unit compressor will still run at preset frequency about 27Hz (H23, H24) and 40Hz (H27, H28)

    - Other errors
      minimum fan speed = Lo Fan
  - Once Electric heater switched ON, It will operate at least 3 minutes.

13.15 Base Pan Heater Control

- Specification:
  - Power: 100 W
  - Voltage: 230 V

- Purpose:
  - To control base pan heater cable operation to melt ice on base pan during heating operation

- Starting conditions:
  - When outdoor air temperature less than or same 5°C and A/C operation is heating

- Control contents:
  - Power supply to base pan heater is ON

- Cancel conditions:
  - When outdoor air temperature exceeds entry condition by 2°C after deice OR
  - When operation is not at heating mode

14. Protection Control

14.1 Protection Control For All Operations

14.1.1 Restart Control (Time Delay Safety Control)

- The Compressor will not turn on within 3 minutes from the moment operation stops, although the unit is turned on again by pressing OFF/ON button at remote control within this period.
- This control is not applicable if the power supply is cut off and on again.
- This phenomenon is to balance the pressure inside the refrigerant cycle.

14.1.2 Total Running Current

1 When the outdoor unit total running current (AC) exceeds X value, the frequency instructed for compressor operation will be decreased.
2 If the running current does not exceed X value for 5 seconds, the frequency instructed will be increased.
3 However, if total outdoor unit running current exceeds Y value, compressor will be stopped immediately for 3 minutes.

Model		CU-XE9WKUA	CU-XE12WKUA	CU-XE15WKUA	CU-XE18WKUA	CU-XE24WKUA
Cool (X)	A	7.42 A	8.33 A	10.98 A	9.46 A	14.09 A
	B	7.42 A	8.33 A	8.77 A	9.46 A	14.09 A
	C	6.97 A	6.97 A	8.77 A	9.46 A	12.47 A
Heat (X)		7.42 A	9.05 A	11.73 A	11.65 A	15.25 A
Y		14.57 A	14.57 A	14.67 A	19.00 A	19.00 A

4 The first 30 minutes of cooling operation, (A) will be applied.

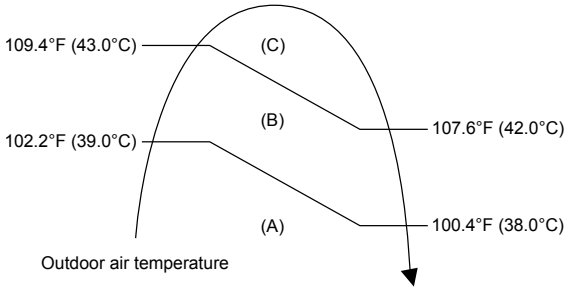

14.1.3 IPM (Power transistor) Prevention Control

- Overheating Prevention Control
  1 When the IPM temperature rises to 248°F (120°C), compressor operation will stop immediately.
  2 Compressor operation restarts after 3 minutes the temperature decreases to 230°F (110°C).
  3 If this condition repeats continuously 4 times within 20 minutes, timer LED will be blinking (“F96” is indicated).

- DC Peak Current Control
  1 When electric current to IPM exceeds set value of 14.7A ±2.0A (XE9 ~ 15WKUA), 19.0A +- 3.0A (XE18/24WKUA), the compressor will stop operate. Then, operation will restart after 3 minutes.
  2 If the set value is exceeded again more than 30 seconds after the compressor starts, the operation will restart after 1 minute.
  3 If the set value exceeded again within 30 seconds after the compressor starts, the operation will restart after 1 minute. If this condition repeats continuously for 7 times, all indoor and outdoor relays will be cut off, timer LED will be blinking (“F99” is indicated).

14.1.4 Compressor Overheating Prevention Control

- Instructed frequency for compressor operation will be regulated by compressor discharge temperature. The changes of frequency are as below.
- If compressor discharge temperature exceeds 224.6°F (107°C), compressor will be stopped, occurs 4 times per 20 minutes, timer LED will be blinking. (“F97” is indicated.)

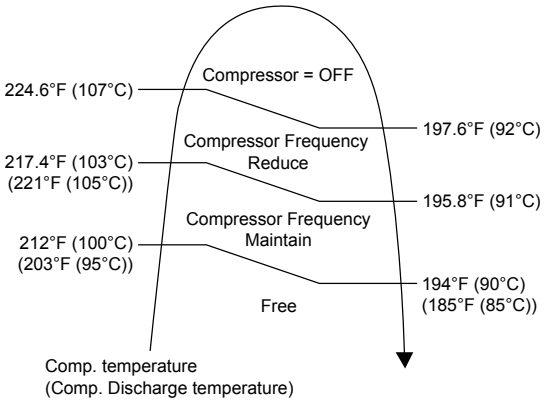

14.1.5 Low Pressure Prevention Control (Gas Leakage Detection)

- Control start conditions
  - For 5 minutes, the compressor continuously operates and outdoor total current is between 0.75A and 0.95A.
  - During Cooling and Soft Dry operations:
    Indoor suction temperature - indoor piping temperature is below 7.2°F (4°C).
  - During Heating operations :
    Indoor piping temperature - indoor suction is under 9°F (5°C).
- Control contents
  - Compressor stops (and restart after 3 minutes).
  - If the conditions above happen 2 times within 20 minutes, the unit will:
    - Stop operation
    - Timer LED blinks and “F91” indicated.

14.1.6 Low Frequency Protection Control 1

- When the compressor operate at frequency lower than 24 Hz continued for 20 minutes, the operation frequency will be changed to 23 Hz for 2 minutes.

14.1.7 Low Frequency Protection Control 2

- When all the below conditions comply, the compressor frequency will change to lower frequency.

Temperature, T, for:	Cooling/Soft Dry	Heating
Indoor intake air (°C)	T < 14 or T ≥ 30	T < 14 or T ≥ 28
Outdoor air (°C)	T < 13 or T ≥ 38	T < 4 or T ≥ 24
Indoor heat exchanger (°C)	T < 30	T ≥ 0

Temperature, T, for:	Cooling/Soft Dry	Heating
Indoor intake air (°F)	T < 57.2 or T ≥ 86.0	T < 57.2 or T ≥ 82.4
Outdoor air (°F)	T < 55.4 or T ≥ 100.4	T < 39.2 or T ≥ 75.2
Indoor heat exchanger (°F)	T < 86.0	T ≥ 32.0

14.2 Protection Control For Cooling & Soft Dry Operation

14.2.1 Outdoor Air Temperature Control

- The compressor operating frequency is regulated in accordance to the outdoor air temperature as shown in the diagram below.
- This control will begin 1 minute after the compressor starts.
- Compressor frequency will adjust base on outdoor air temperature.

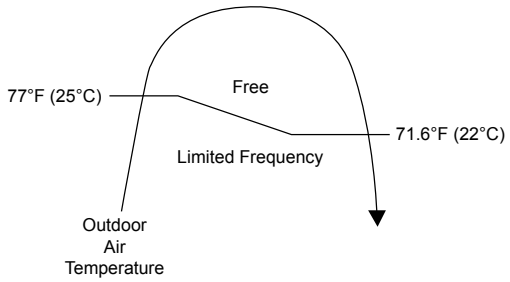

- The compressor will be stopped to avoid compressor overloading.

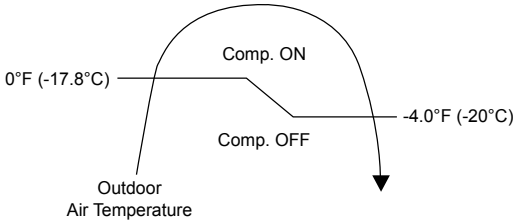

14.2.2 Cooling Overload Control

- Detects the Outdoor pipe temperature and carry out below restriction/limitation (Limit the compressor Operation frequency).
- The compressor stop if outdoor pipe temperature exceeds 141.8°F (61°C).
- If the compressor stops 4 times in 20 minutes, Timer LED blinking (F95 indicated: outdoor high pressure rise protection).

14.2.3 Freeze Prevention Control 1

- When indoor heat exchanger temperature is lower than 32°F (0°C) continuously for 6 minutes, compressor will stop operating.
- Compressor will resume its operation 3 minutes after the indoor heat exchanger is higher than 41°F (5°C).
- At the same time, indoor fan speed will be higher than during its normal operation.
- If indoor heat exchanger temperature is higher than 41°F (5°C) for 5 minutes, the fan speed will return to its normal operation.

14.2.4 Freeze Prevention Control 2

- Control start conditions
  - During Cooling operation and soft dry operation
    - During thermo OFF condition, indoor intake temperature is less than 50°F (10°C) or
    - Compressor stops for freeze prevention control
  - Either one of the conditions above occurs 5 times in 60 minutes.
- Control contents
  - Operation stops
  - Timer LED blinks and “H99” indicated

14.2.5 Dew Prevention Control 1

- To prevent dew formation at indoor unit discharge area.
- This control will be activated if:
  - Outdoor air temperature and Indoor pipe temperature judgment by microcontroller is fulfilled.
  - When Cooling or Dry mode is operated more than 20 minutes or more.
- This control stopped if:
  - Compressor stopped.
  - Remote control setting changed (fan speed / temperature).
  - Outdoor air temperature and indoor intake temperature changed.
- Fan speed will be adjusted accordingly in this control.

14.2.6 Odor Cut Control

- To reduce the odor released from the unit.
  - Start Condition
    - AUTO FAN Speed is selected during COOL or DRY operation.
    - During freeze prevention control and timer preliminary operation, this control is not applicable.
  - Control content
    - Depends on compressor conditions:
      1. Compressor OFF → Compressor ON.
         The indoor unit fan stops temporarily and then starts to blow at minimum airflow for 30 seconds.
      2. Compressor ON → Compressor OFF.
         The indoor unit fan stops for 90 seconds and then blows at minimum airflow for 20 seconds.

14.3 Protection Control For Heating Operation

14.3.1 Intake Air Temperature Control

Compressor will operate at limited freq., if indoor intake air temperature is 86°F (30°C) or above.

14.3.2 Outdoor Air Temperature Control

- The Max current value is regulated when the outdoor air temperature rise above 57.2°F (14°C) in order to avoid compressor overloading.

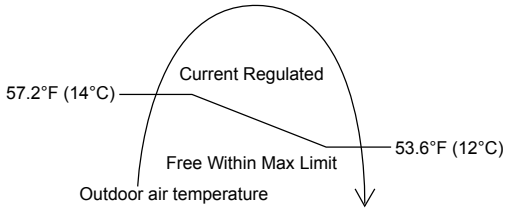

14.3.3 Overload Protection Control

- The compressor operating frequency is regulated in accordance to indoor heat exchanger temperature as shown below.
- If the heat exchanger temperature exceeds 140°F (60°C), compressor will stop.

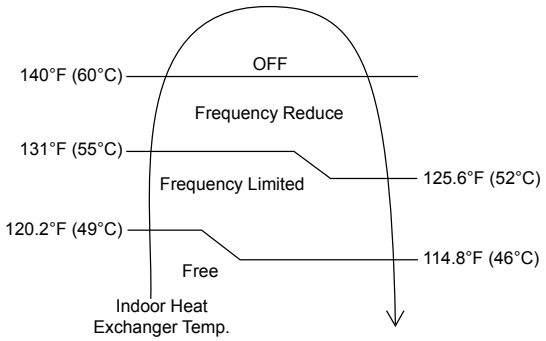

14.3.4 Low Temperature Compressor Oil Return Control

- In heating operation, if the outdoor temperature falls below 14°F (-10°C) when compressor starts, the compressor frequency will be regulated up to 600 seconds.

14.3.5 Cold Draught Prevention Control

- When indoor pipe temperature is low, cold draught operation starts where indoor fan speed will be reduced.

14.3.6 Deice Operation

- When outdoor pipe temperature and outdoor air temperature is low, deice operation start where indoor fan motor and outdoor fan motor stop and operation LED blinks.

15. Servicing Mode

15.1 Auto OFF/ON Button

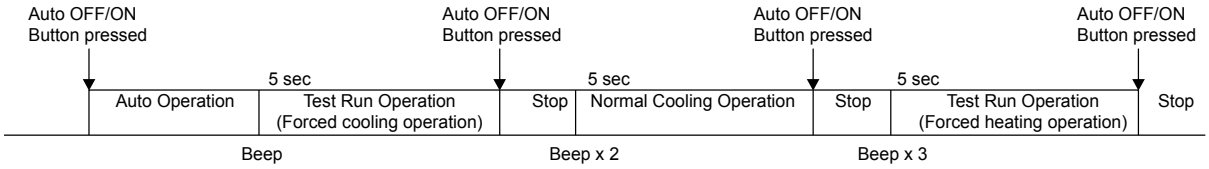

1 AUTO OPERATION MODE
The Auto operation will be activated immediately once the Auto OFF/ON button is pressed. This operation can be used to operate air conditioner with limited function if remote control is misplaced or malfunction.

2 TEST RUN OPERATION (FOR PUMP DOWN/SERVICING PURPOSE)
The Test Run operation will be activated if the Auto OFF/ON button is pressed continuously for more than 5 seconds. A “beep” sound will heard at the fifth seconds, in order to identify the starting of Test Run operation (Forced cooling operation). Within 5 minutes after Forced cooling operation start, the Auto OFF/ON button is pressed for more than 5 seconds. A 2 “beep” sounds will heard at the fifth seconds, in order to identify the starting of Normal cooling operation.
Within 5 minutes after Normal cooling operation start, the Auto OFF/ON button is pressed for more than 5 seconds. A 3 “beep” sounds will be heard at the fifth seconds, in order to identify the starting of Forced heating operation.

The Auto OFF/ON button may be used together with remote control to set / change the advance setting of air conditioner operation.

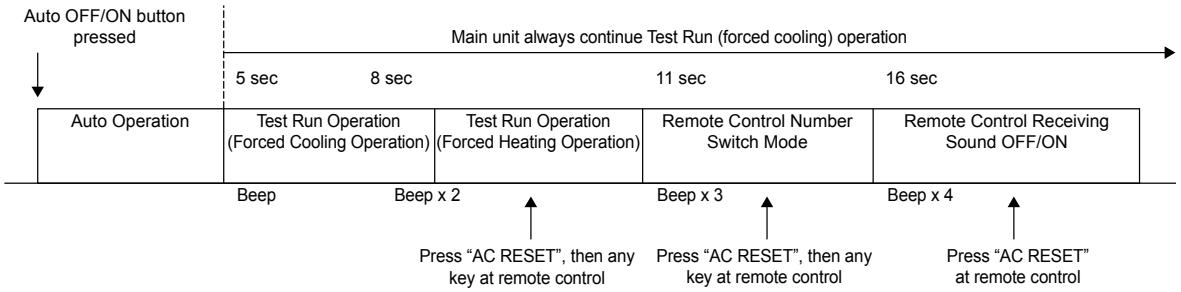

3 REMOTE CONTROL NUMBER SWITCH MODE
The Remote Control Number Switch Mode will be activated if the Auto OFF/ON button is pressed continuously for more than 11 seconds (3 “beep” sounds will occur at 11th seconds to identify the Remote Control Number Switch Mode is in standby condition) and press “AC RESET” button and then press any button at remote control to transmit and store the desired transmission code to the EEPROM.

There are 4 types of remote control transmission code could be selected and stored in EEPROM of indoor unit. The indoor unit will only operate when received signal with same transmission code from remote control. This could prevent signal interference when there are 2 or more indoor units installed nearby together.
To change remote control transmission code, short or open jumpers at the remote control printed circuit board.

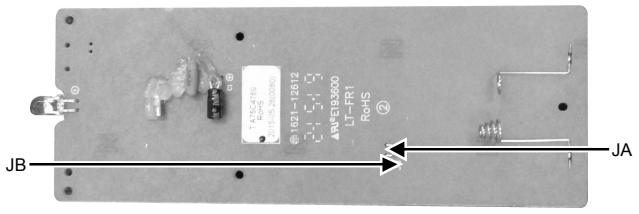

Remote Control Printed Circuit Board		
Jumper A (JA)	Jumper B (JB)	Remote Control No.
Short	Open	A (Default)
Open	Open	B
Short	Short	C
Open	Short	D

- During Remote Control Number Switch Mode, press any button at remote control to transmit and store the transmission code to the EEPROM.

4 REMOTE CONTROL RECEIVING SOUND OFF/ON MODE

The Remote Control Receiving Sound OFF/ON Mode will be activated if the Auto OFF/ON button is pressed continuously for more than 16 seconds (4 “beep” sounds will occur at 16th seconds to identify the Remote Control Receiving Sound Off/On Mode is in standby condition) and press “AC Reset” button at remote control.

Press “Auto OFF/ON button” to toggle remote control receiving sound.

- Short “beep”: Turn OFF remote control receiving sound.
- Long “beep”: Turn ON remote control receiving sound.

After Auto OFF/ON Button is pressed, the 20 seconds counter for Remote Control Receiving Sound OFF/ON Mode is restarted.

15.2 Cooling Only Operation

15.2.1 How to activate and deactivate Cooling Only Operation

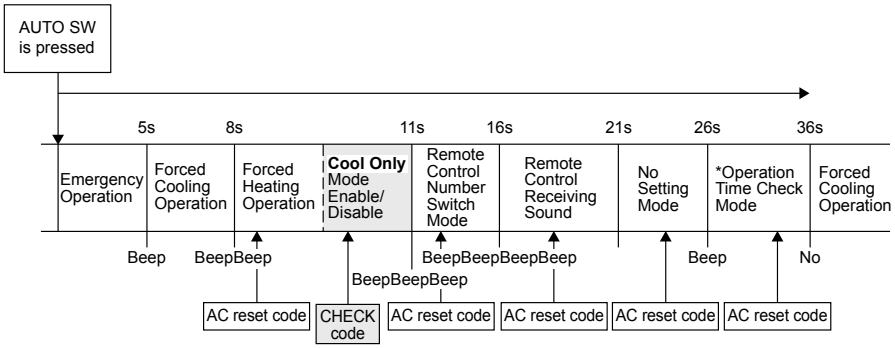

The default setting is "Cool Only" mode disable.

- To enable the "Cool Only" mode, press the AUTO OFF/ON SW for more than 8s and less than 11s, “Beep Beep” sound will be heard, then release the AUTO OFF/ON SW and press remote controller CHECK button. A short “Beep” sound will be heard. “Cool Only” mode is now enable.
- To disable the "Cool Only" mode, press the AUTO OFF/ON SW for more than 8s and less than 11s, “Beep Beep” sound will be heard, then release the AUTO OFF/ON SW and press remote controller CHECK button. A long "Beep" sound will be heard. “Cool Only” mode is now disable.

15.2.2 Operation mode during Cooling Only Operation

The table below shows the operation mode comparison when cooling only operation mode activated and deactivated.

Operation mode	Cooling Only Operation Mode Activated	Cooling Only Operation Mode Deactivated
AUTO	After 30s sampling, regardless of indoor intake or outdoor intake temperature judgement, the unit will run Cooling or DRY operation.	After 30s sampling, the unit will judge the operation mode base on remote controller temperature setting and Indoor Intake Sensor (New Auto Mode) or Outdoor Intake Sensor (Old Auto Mode)
HEAT	The unit will stop and Power LED blinking.	The unit will run Heating operation.
COOL	The unit will run Cooling operation.	The unit will run Cooling operation.
DRY	The unit will run DRY operation.	The unit will run Dry operation.
Force Heating	The unit will run Force Cooling operation.	The unit will run Force Heating operation.
AUTO (with Timer)	The unit will turn ON by the timer and run Auto Operation. After 30s sampling, regardless of indoor intake or outdoor intake temperature judgement, the unit will run Cooling or DRY operation.	The unit will turn ON by the timer and run Auto Operation. After 30s sampling, the unit will judge the operation mode base on remote controller temperature setting and Indoor Intake Sensor (New Auto Mode) or Outdoor Intake Sensor (Old Auto Mode)
HEAT (with Timer)	The unit will not turn ON by the Timer. Power LED blinking.	The unit will turn ON by the timer and run Heating Operation.
COOL (with Timer)	The unit will turn ON by the Timer and run Cooling operation.	The unit will turn ON by the timer and run Cooling Operation.
DRY (with Timer)	The unit will turn ON by the Timer and run DRY operation.	The unit will turn ON by the timer and run Cooling Dry Operation.

**** Power LED blinking = 2.5s ON, 0.5s OFF**

15.3 Remote Control Button

15.3.1 SET Button

- To check remote control transmission code and store the transmission code to EEPROM:
  - Press “Set” button by using pointer.
  - Press “Timer Set” button until a “beep” sound is heard as confirmation of transmission code changed.

- To limit set temperature range for COOL & DRY, HEAT mode.
  - Press “Set” button by using pointer.
  - Press TEMP increment or decrement button to choose No. 3.
  - Press Timer increment or decrement button to select desired temperature low limit of set temperature for COOL & DRY mode.
  - Press Timer Set button to confirm low limit selection.
  - Press TEMP increment or decrement button to choose No. 4.
  - Press Timer decrement or increment button to select desired temperature high limit of set temperature for COOL & DRY mode.
  - Press Timer Set button to confirm high limit selection.
  - Press TEMP increment or decrement button to choose No. 5.
  - Press Timer increment or decrement button to select desired temperature low limit of set temperature for HEAT mode.
  - Press Timer Set button to confirm low limit selection.
  - Press TEMP increment or decrement button to choose No. 6.
  - Press Timer decrement or increment button to select desired temperature high limit of set temperature for HEAT mode.
  - Press Timer Set button to confirm high limit selection.
  - LCD returns to original display if remote control does not operate for 30 seconds or press Timer Cancel button.

15.3.2 RESET (RC)

- To clear and restore the remote control setting to factory default.
  - Press once to clear the memory.

15.3.3 RESET (AC)

- To restore the unit’s setting to factory default.
  - Press once to restore the unit’s setting.

15.3.4 TIMER ▲

- To change indoor unit indicator’s LED intensity.
  - Press continuously for 5 seconds.

15.3.5 TIMER ▼

- To change remote control display from Degree Celsius (°C) to Degree Fahrenheit (°F).
  - Press continuously for 10 seconds.

16. Troubleshooting Guide

16.1 Refrigeration Cycle System

In order to diagnose malfunctions, make sure that there are no electrical problems before inspecting the refrigeration cycle. Such problems include insufficient insulation, problem with the power source, malfunction of a compressor and a fan.
The normal outlet air temperature and pressure of the refrigeration cycle depends on various conditions, the standard values for them are shown in the table on the right.

Normal Pressure and Outlet Air Temperature (Standard)

	Gas Pressure PSI (kg/cm^2G)	Outlet air Temperature °F (°C)
Cooling Mode	130.53 ~ 174.04 (9 ~ 12)	53.6 ~ 60.8 (12 ~ 16)
Heating Mode	333.58 ~ 420.60 (23 ~ 29)	96.8 ~ 113 (36 ~ 45)

*Condition: • Indoor fan speed = High
• Outdoor temperature 95°F (35°C) at the Cooling mode and 44.6°F (7°C) at the heating mode
• Compressor operates at rated frequency

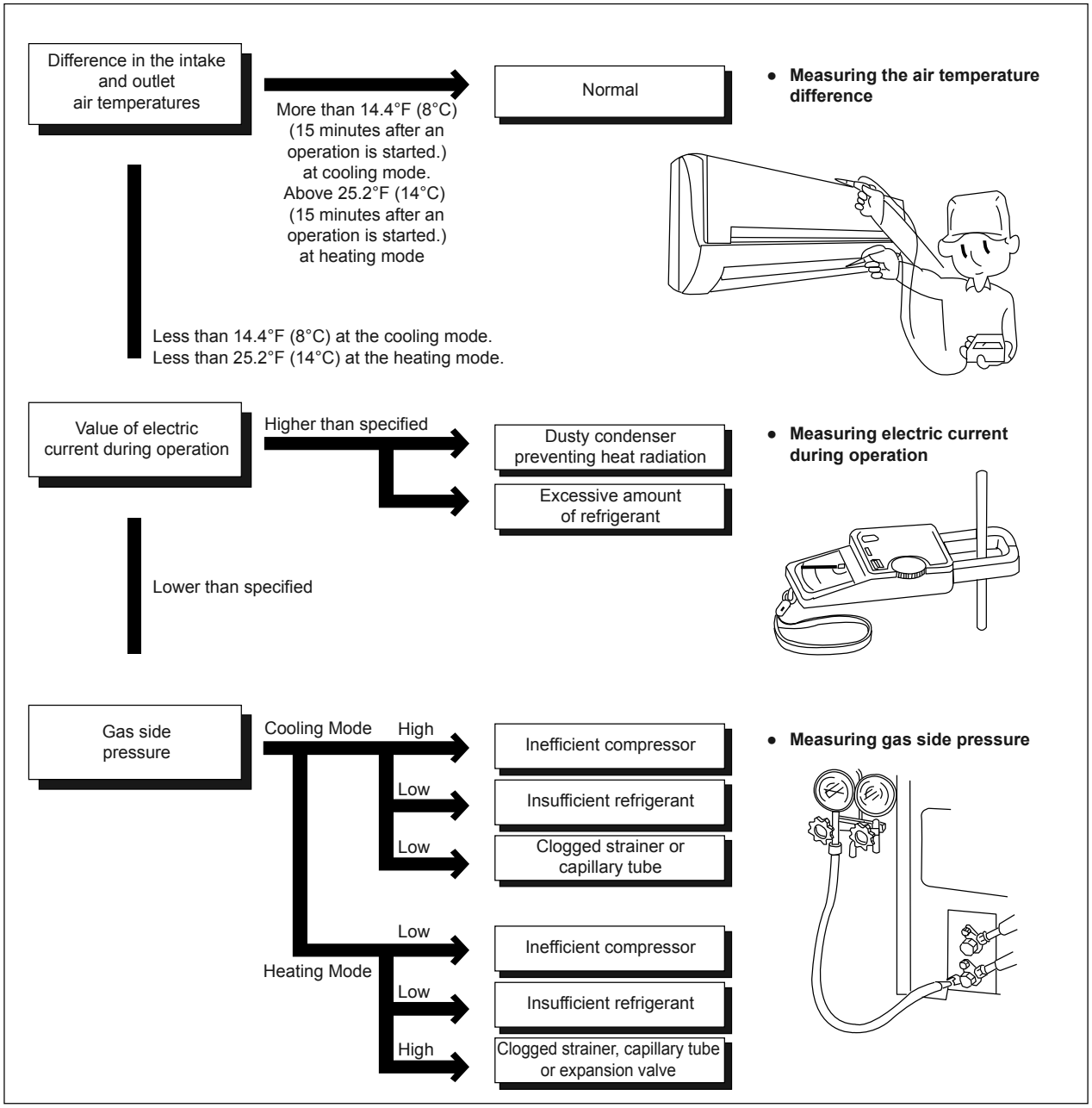

16.1.1 Relationship between the condition of the air conditioner and pressure and electric current

Condition of the air conditioner	Cooling Mode			Heating Mode		
	Low Pressure	High Pressure	Electric current during operation	Low Pressure	High Pressure	Electric current during operation
Insufficient refrigerant (gas leakage)	↘	↘	↘	↘	↘	↘
Clogged capillary tube or Strainer	↘	↘	↘	↗	↗	↗
Short circuit in the indoor unit	↘	↘	↘	↗	↗	↗
Heat radiation deficiency of the outdoor unit	↗	↗	↗	↘	↘	↘
Inefficient compression	↗	↘	↘	↗	↘	↘

• Carry out the measurement of pressure, electric current, and temperature fifteen minutes after an operation is started.

16.2 Breakdown Self Diagnosis Function

16.2.1 Self Diagnosis Function (Three Digits Alphanumeric Code)

- Once abnormality has occurred during operation, the unit will stop its operation, and Timer LED blinks.
- Although Timer LED goes off when power supply is turned off, if the unit is operated under a breakdown condition, the LED will light up again.
- In operation after breakdown repair, the Timer LED will no more blink. The last error code (abnormality) will be stored in IC memory.

16.2.2 To Make a Diagnosis

1 Timer LED start to blink and the unit automatically stops the operation.
2 Press the CHECK button on the remote controller continuously for 5 seconds.
3 "- -" will be displayed on the remote controller display.
Note: Display only for "- -". (No transmitting signal, no receiving sound and no Power LED blinking.)
4 Press the "TIMER" ▲ or ▼ button on the remote controller. The code "H00" (no abnormality) will be displayed and signal will be transmitted to the main unit.
5 Every press of the button (up or down) will increase abnormality numbers and transmit abnormality code signal to the main unit.
6 When the latest abnormality code on the main unit and code transmitted from the remote controller are matched, power LED will light up for 30 seconds and a beep sound (continuously for 4 seconds) will be heard. If no codes are matched, power LED will light up for 0.5 seconds and no sound will be heard.
7 The breakdown diagnosis mode will be canceled unless pressing the CHECK button continuously for 5 seconds or operating the unit for 30 seconds.
8 The LED will be off if the unit is turned off or the RESET button on the main unit is pressed.

16.2.3 To Display Memorized Error Code (Protective Operation)

1 Turn power on.
2 Press the CHECK button on the remote controller continuously for 5 seconds.
3 "- -" will be displayed on the remote controller display.
Note: Display only for "- -". (No transmitting signal, no receiving sound and no Power LED blinking.)
4 Press the "TIMER" ▲ or ▼ button on the remote controller. The code "H00" (no abnormality) will be displayed and signal will be transmitted to the main unit. The power LED lights up. If no abnormality is stored in the memory, three beeps sound will be heard.
5 Every press of the button (up or down) will increase abnormality numbers and transmit abnormality code signal to the main unit.
6 When the latest abnormality code on the main unit and code transmitted from the remote controller are matched, power LED will light up for 30 seconds and a beep sound (continuously for 4 seconds) will be heard. If no codes are matched, power LED will light up for 0.5 seconds and no sound will be heard.
7 The breakdown diagnosis mode will be canceled unless pressing the CHECK button continuously for 5 seconds or operating the unit for 30 seconds.
8 The same diagnosis can be repeated by turning power on again.

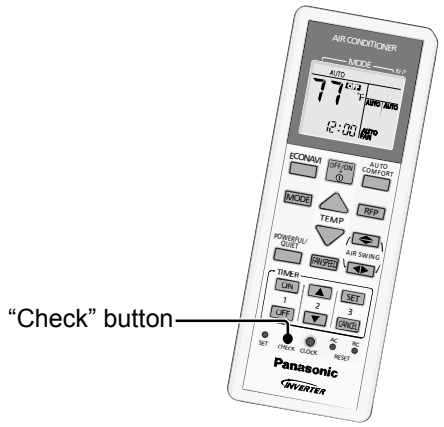

16.2.4 To Clear Memorized Error Code after Repair (Protective Operation)

1 Turn power on (in standby condition).
2 Press the AUTO button for 5 seconds (A beep receiving sound) on the main unit to operate the unit at Forced Cooling Operation modes.
3 Press the CHECK button on the remote controller for about 1 second with a pointed object to transmit signal to main unit. A beep sound is heard from main unit and the data is cleared.

16.2.5 Temporary Operation (Depending On Breakdown Status)

1 Press the AUTO button (A beep receiving sound) on the main unit to operate the unit. (Remote control will become possible.)
2 The unit can temporarily be used until repaired.

16.3 Error Codes Table

Diagnosis display	Abnormality / Protection control	Abnormality Judgment	Protection Operation	Problem	Check location
H00	No memory of failure	—	Normal operation	—	—
H11	Indoor/outdoor abnormal communication	After operation for 1 minute	Indoor fan only operation can start by entering into force cooling operation	Indoor/outdoor communication not establish	• Indoor/outdoor wire terminal • Indoor/outdoor PCB • Indoor/outdoor connection wire
H12	Indoor unit capacity unmatched	90s after power supply	—	Total indoor capability more than maximum limit or less than minimum limit, or number of indoor unit less than two	• Indoor/outdoor connection wire • Indoor/outdoor PCB • Specification and combination table in catalogue
H14	Indoor intake air temperature sensor abnormality	Continuous for 5s	—	Indoor intake air temperature sensor open or short circuit	• Indoor intake air temperature sensor lead wire and connector
H15	Compressor temperature sensor abnormality	Continuous for 5s	—	Compressor temperature sensor open or short circuit	• Compressor temperature sensor lead wire and connector
H16	Outdoor current transformer (CT) abnormality	—	—	Current transformer faulty or compressor faulty	• Outdoor PCB faulty or compressor faulty
H19	Indoor fan motor mechanism lock	Continuous happen for 7 times	—	Indoor fan motor lock or feedback abnormal	• Fan motor lead wire and connector • Fan motor lock or block
H23	Indoor heat exchanger temperature sensor abnormality	Continuous for 5s	—	Indoor heat exchanger temperature sensor open or short circuit	• Indoor heat exchanger temperature sensor lead wire and connector
H24	Indoor heat exchanger temperature sensor 2 abnormality	Continuous for 5s	—	Indoor heat exchanger temperature sensor 2 open or short circuit	• Indoor heat exchanger temperature sensor 2 lead wire and connector
H27	Outdoor air temperature sensor abnormality	Continuous for 5s	—	Outdoor air temperature sensor open or short circuit	• Outdoor air temperature sensor lead wire and connector
H28	Outdoor heat exchanger temperature sensor 1 abnormality	Continuous for 5s	—	Outdoor heat exchanger temperature sensor 1 open or short circuit	• Outdoor heat exchanger temperature sensor 1 lead wire and connector
H30	Outdoor discharge pipe temperature sensor abnormality	Continuous for 5s	—	Outdoor discharge pipe temperature sensor open or short circuit	• Outdoor discharge pipe temperature sensor lead wire and connector
H32	Outdoor heat exchanger temperature sensor 2 abnormality	Continuous for 5s	—	Outdoor heat exchanger temperature sensor 2 open or short circuit	• Outdoor heat exchanger temperature sensor 2 lead wire and connector
H33	Indoor / outdoor misconnection abnormality	—	—	Indoor and outdoor rated voltage different	• Indoor and outdoor units check
H36	Outdoor gas pipe temperature sensor abnormality	Continuous for 5s	Heating protection operation only	Outdoor gas pipe temperature sensor open or short circuit	• Outdoor gas pipe temperature sensor lead wire and connector
H37	Outdoor liquid pipe temperature sensor abnormality	Continuous for 5s	Cooling protection operation only	Outdoor liquid pipe temperature sensor open or short circuit	• Outdoor liquid pipe temperature sensor lead wire and connector
H38	Indoor/Outdoor mismatch (brand code)	—	—	Brand code not match	• Check indoor unit and outdoor unit
H39	Abnormal indoor operating unit or standby units	3 times happen within 40 minutes	—	Wrong wiring and connecting pipe, expansion valve abnormality, indoor heat exchanger sensor open circuit	• Check indoor/outdoor connection wire and connection pipe • Indoor heat exchanger sensor lead wire and connector • Expansion valve and lead wire and connector
H59	ECONAVI sensor abnormality	Continuous for 25s	—	ECONAVI sensor open or short circuit	• ECONAVI sensor (defective or disconnected) • ECONAVI PCB
H64	Outdoor high pressure sensor abnormality	Continuous for 1 minute	—	High pressure sensor open circuit during compressor stop	• High pressure sensor • Lead wire and connector
H97	Outdoor fan motor mechanism lock	2 times happen within 30 minutes	—	Outdoor fan motor lock or feedback abnormal	• Outdoor fan motor lead wire and connector • Fan motor lock or block

Diagnosis display	Abnormality / Protection control	Abnormality Judgment	Protection Operation	Problem	Check location
H98	Indoor high pressure protection	—	—	Indoor high pressure protection (Heating)	• Check indoor heat exchanger • Air filter dirty • Air circulation short circuit
H99	Indoor operating unit freeze protection	—	—	Indoor freeze protection (Cooling)	• Check indoor heat exchanger • Air filter dirty • Air circulation short circuit
F11	4-way valve switching abnormality	4 times happen within 30 minutes	—	4-way valve switching abnormal	• 4-way valve • Lead wire and connector
F17	Indoor standby units freezing abnormality	3 times happen within 40 minutes	—	Wrong wiring and connecting pipe, expansion valve leakage, indoor heat exchanger sensor open circuit	• Check indoor/outdoor connection wire and pipe • Indoor heat exchanger sensor lead wire and connector • Expansion valve lead wire and connector
F90	Power factor correction (PFC) circuit protection	4 times happen within 10 minutes	—	Power factor correction circuit abnormal	• Outdoor PCB faulty
F91	Refrigeration cycle abnormality	2 times happen within 20 minutes	—	Refrigeration cycle abnormal	• Insufficient refrigerant or valve close
F93	Compressor abnormal revolution	4 times happen within 20 minutes	—	Compressor abnormal revolution	• Power transistor module faulty or compressor lock
F94	Compressor discharge overshoot protection	4 times happen within 30 minutes	—	Compressor discharge pressure overshoot	• Check refrigeration system
F95	Outdoor cooling high pressure protection	4 times happen within 20 minutes	—	Cooling high pressure protection	• Check refrigeration system • Outdoor air circuit
F96	Power transistor module overheating protection	4 times happen within 30 minutes	—	Power transistor module overheat	• PCB faulty • Outdoor air circuit (fan motor)
F97	Compressor overheating protection	3 times happen within 30 minutes	—	Compressor overheat	• Insufficient refrigerant
F98	Total running current protection	3 times happen within 20 minutes	—	Total current protection	• Check refrigeration system • Power source or compressor lock
F99	Outdoor direct current (DC) peak detection	Continuous happen for 7 times	—	Power transistor module current protection	• Power transistor module faulty or compressor lock

16.4 Self-diagnosis Method

16.4.1 H11 (Indoor/Outdoor Abnormal Communication)

Malfunction Decision Conditions

- During startup and operation of cooling and heating, the data received from outdoor unit in indoor unit signal transmission is checked whether it is normal.

Malfunction Caused

- Faulty indoor unit PCB.
- Faulty outdoor unit PCB.
- Indoor unit-outdoor unit signal transmission error due to wiring error.
- Indoor unit-outdoor unit signal transmission error due to breaking of wire in the connection wires between the indoor and outdoor units.

Troubleshooting

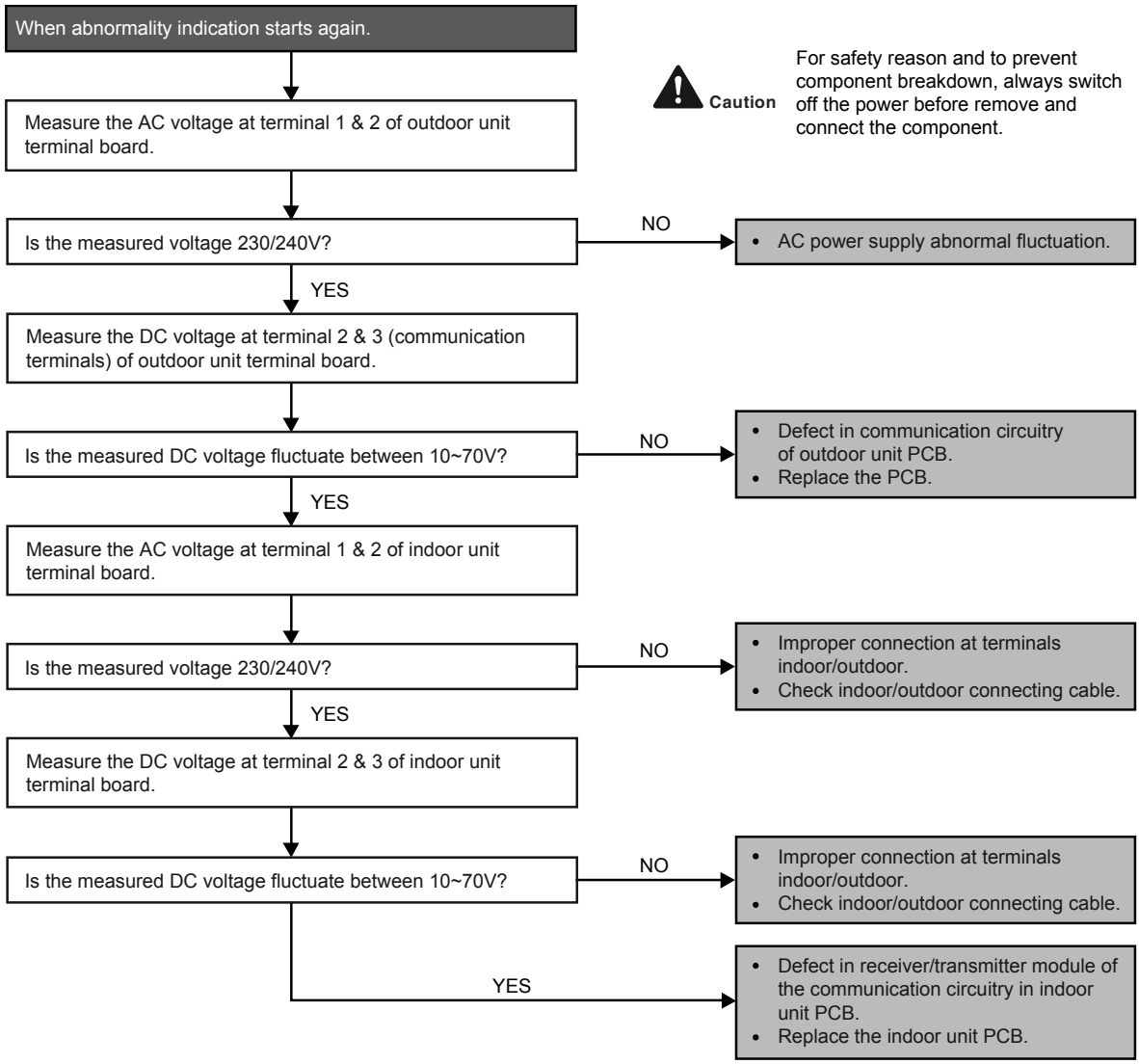

16.4.2 H12 (Indoor/Outdoor Capacity Rank Mismatched)

Malfunction Decision Conditions

- During startup, error code appears when different types of indoor and outdoor units are interconnected.

Malfunction Caused

- Wrong models interconnected.
- Wrong indoor unit or outdoor unit PCBs mounted.
- Indoor unit or outdoor unit PCBs defective.
- Indoor-outdoor unit signal transmission error due to wrong wiring.
- Indoor-outdoor unit signal transmission error due to breaking of wire 3 in the connection wires between the indoor and outdoor units.

Troubleshooting

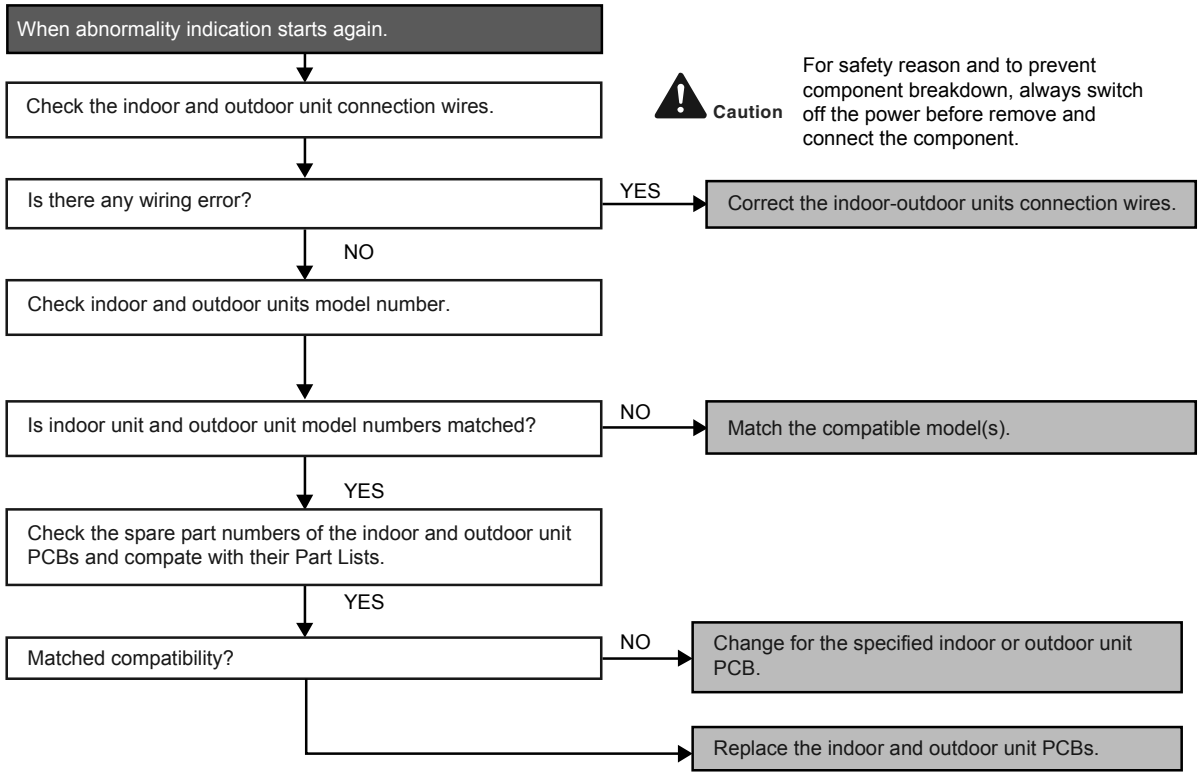

16.4.3 H14 (Indoor Intake Air Temperature Sensor Abnormality)

Malfunction Decision Conditions

- During startup and operation of cooling and heating, the temperatures detected by the indoor intake air temperature sensor are used to determine sensor errors.

Malfunction Caused

- Faulty connector connection.
- Faulty sensor.
- Faulty PCB.

Troubleshooting

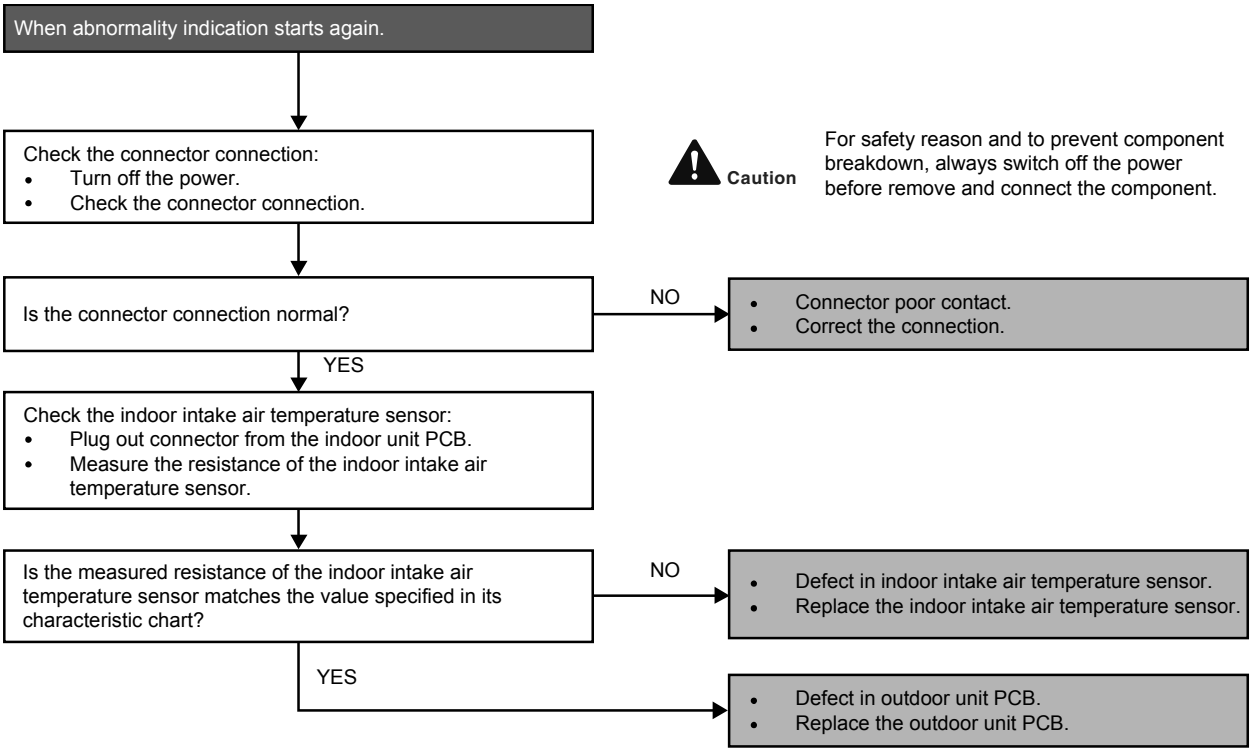

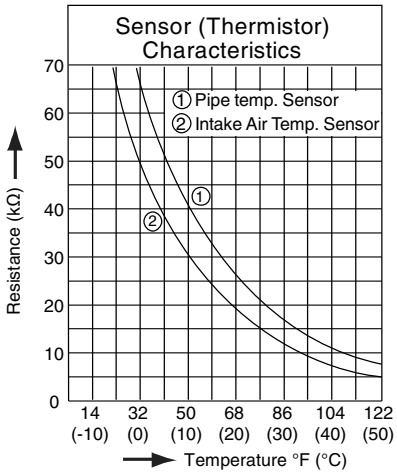

16.4.4 H15 (Compressor Temperature Sensor Abnormality)

Malfunction Decision Conditions

- During startup and operation of cooling and heating, the temperatures detected by the outdoor compressor temperature sensor are used to determine sensor errors.

Malfunction Caused

- Faulty connector connection.
- Faulty sensor.
- Faulty PCB.

Troubleshooting

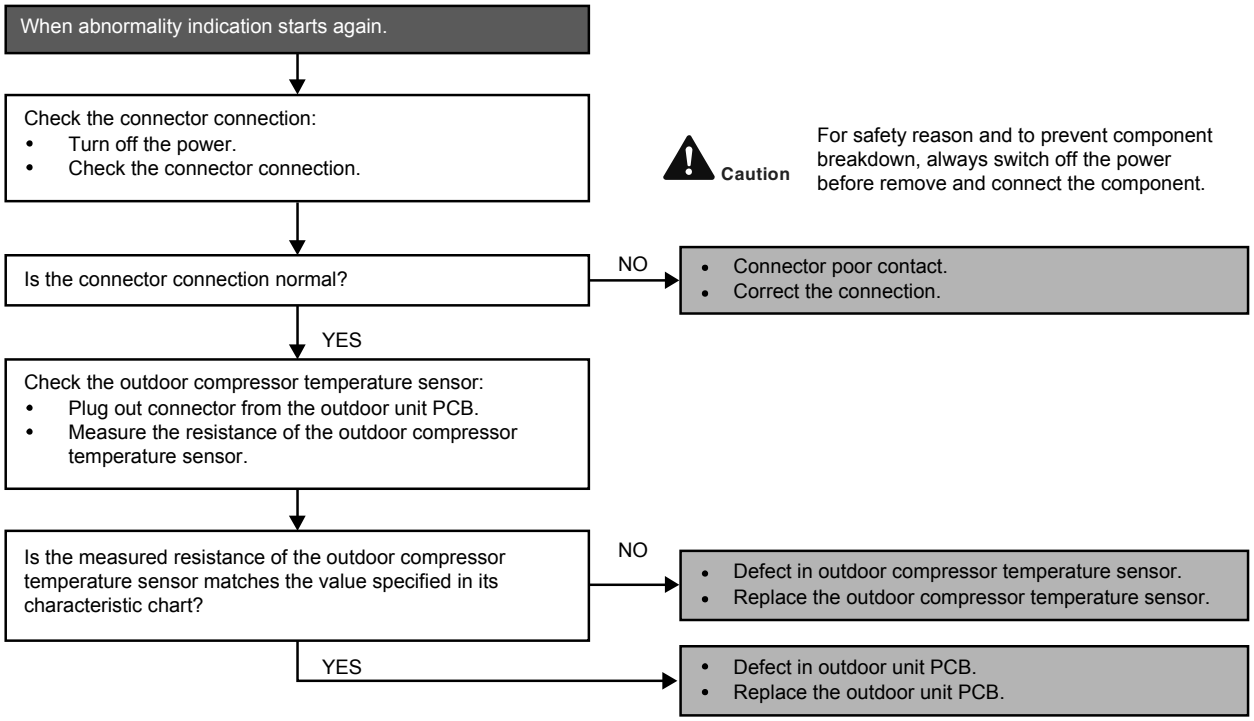

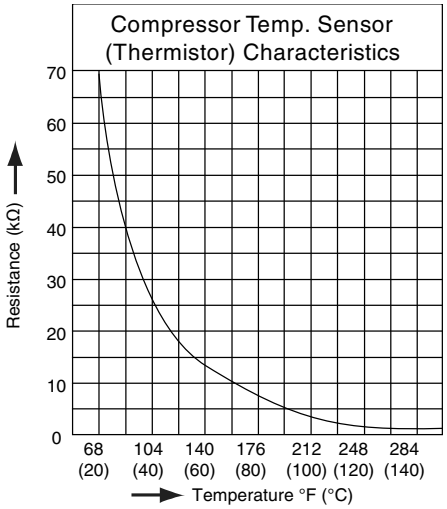

16.4.5 H16 (Outdoor Current Transformer)

Malfunction Decision Conditions

- An input current, detected by Current Transformer CT, is below threshold value when the compressor is operating at certain frequency value for 3 minutes.

Malfunction Caused

- Lack of gas
- Broken CT (current transformer)
- Broken Outdoor PCB

Troubleshooting

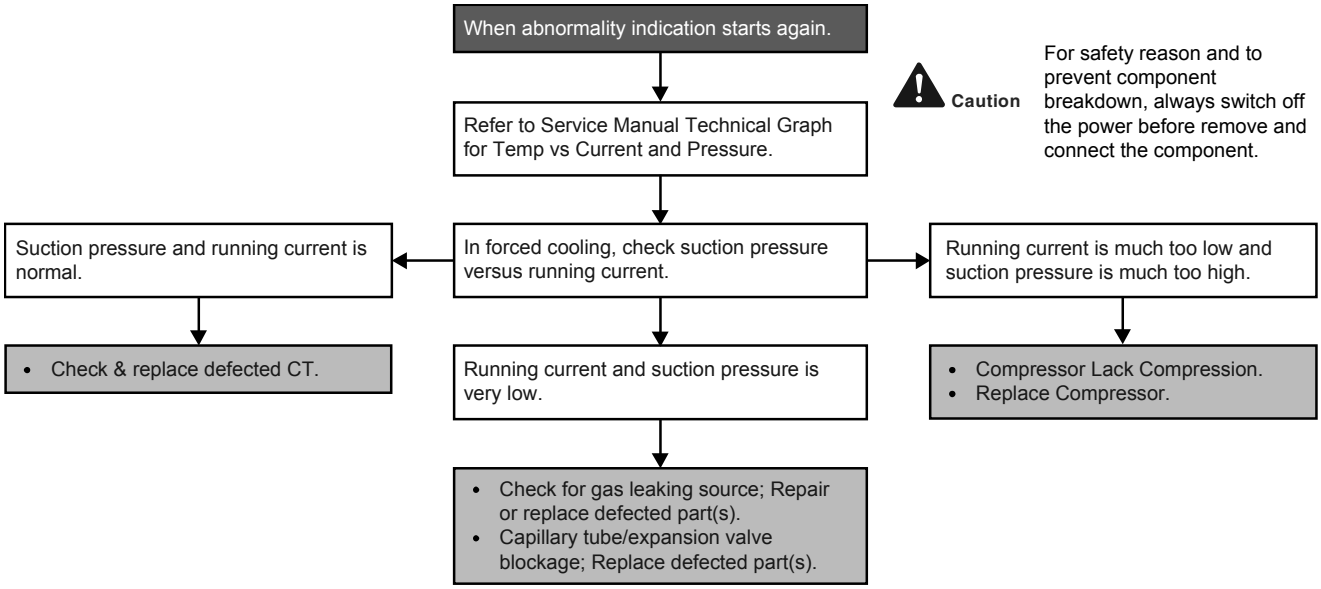

16.4.6 H19 (Indoor Fan Motor – DC Motor Mechanism Locked)

Malfunction Decision Conditions

- The rotation speed detected by the Hall IC during fan motor operation is used to determine abnormal fan motor (feedback of rotation > 2550rpm or < 50rpm)

Malfunction Caused

- Operation stops due to short circuit inside the fan motor winding.
- Operation stops due to breaking of wire inside the fan motor.
- Operation stops due to breaking of fan motor lead wires.
- Operation stops due to Hall IC malfunction.
- Operation error due to faulty indoor unit PCB.

Troubleshooting

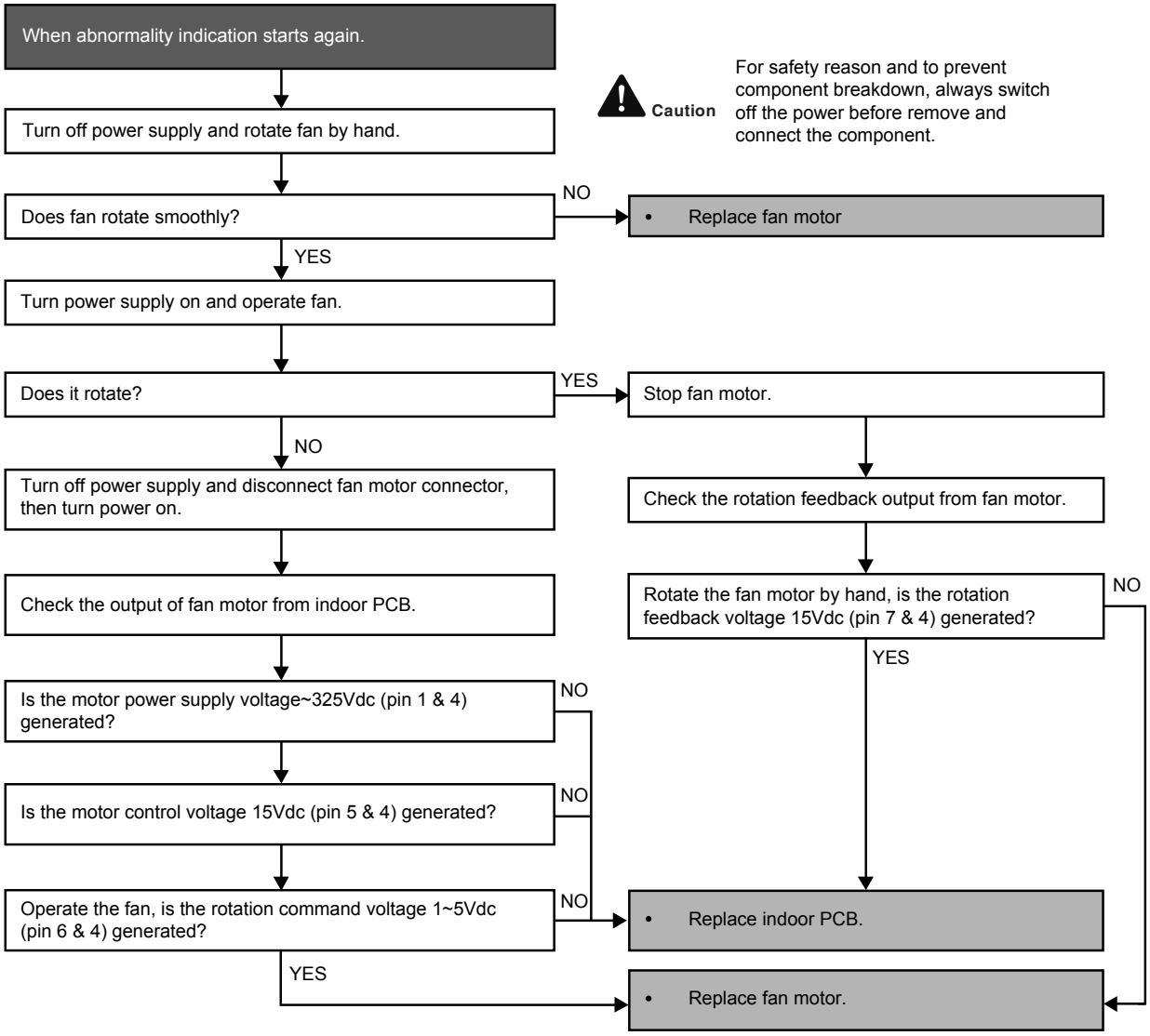

16.4.7 H23 / H24 (Indoor Pipe Temperature Sensor Abnormality)

Malfunction Decision Conditions

- During startup and operation of cooling and heating, the temperatures detected by the indoor heat exchanger temperature sensor are used to determine sensor errors.

Malfunction Caused

- Faulty connector connection.
- Faulty sensor.
- Faulty PCB.

Troubleshooting

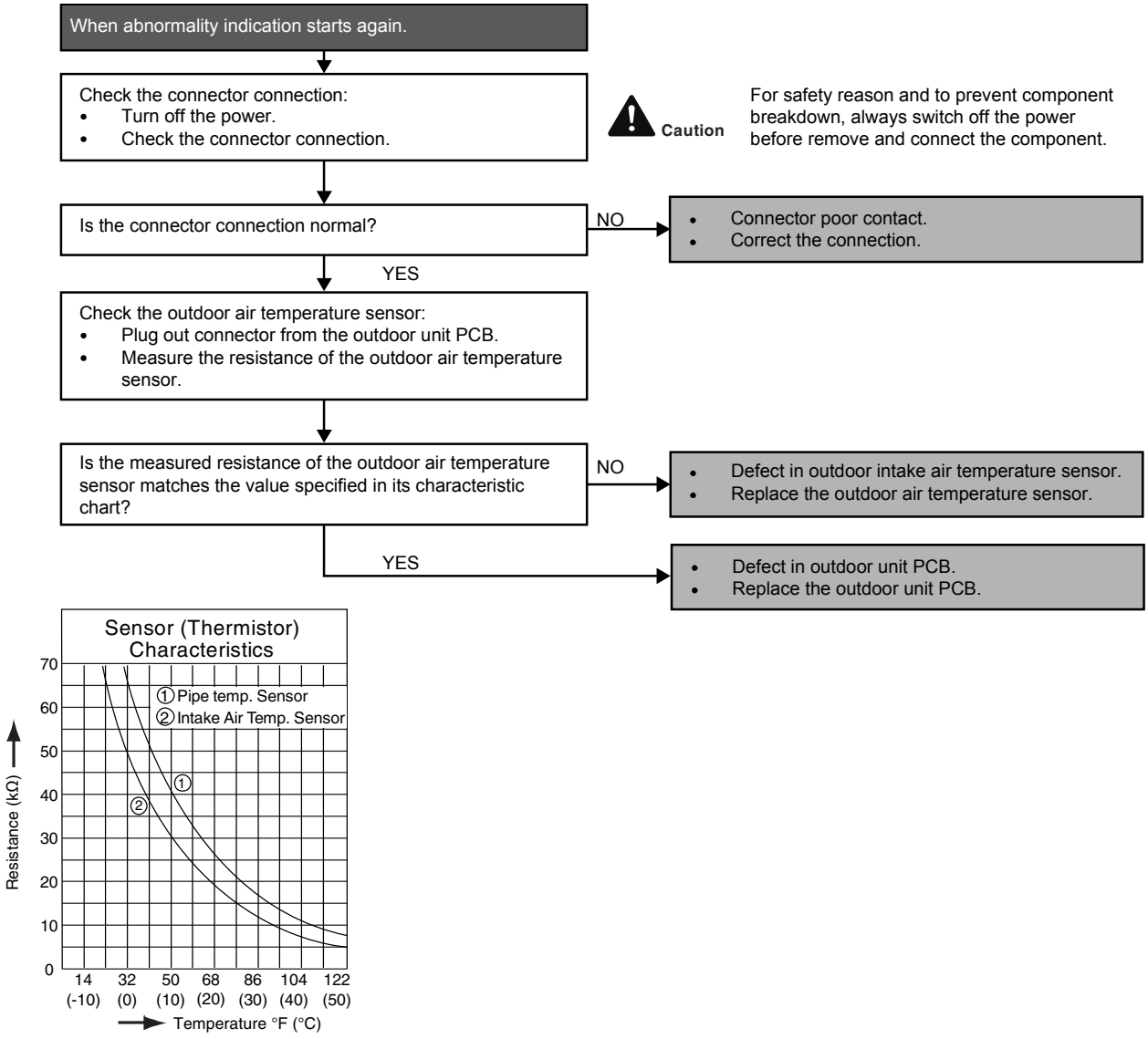

16.4.8 H27 (Outdoor Air Temperature Sensor Abnormality)

Malfunction Decision Conditions

- During startup and operation of cooling and heating, the temperatures detected by the outdoor air temperature sensor are used to determine sensor errors.

Malfunction Caused

- Faulty connector connection.
- Faulty sensor.
- Faulty PCB.

Troubleshooting

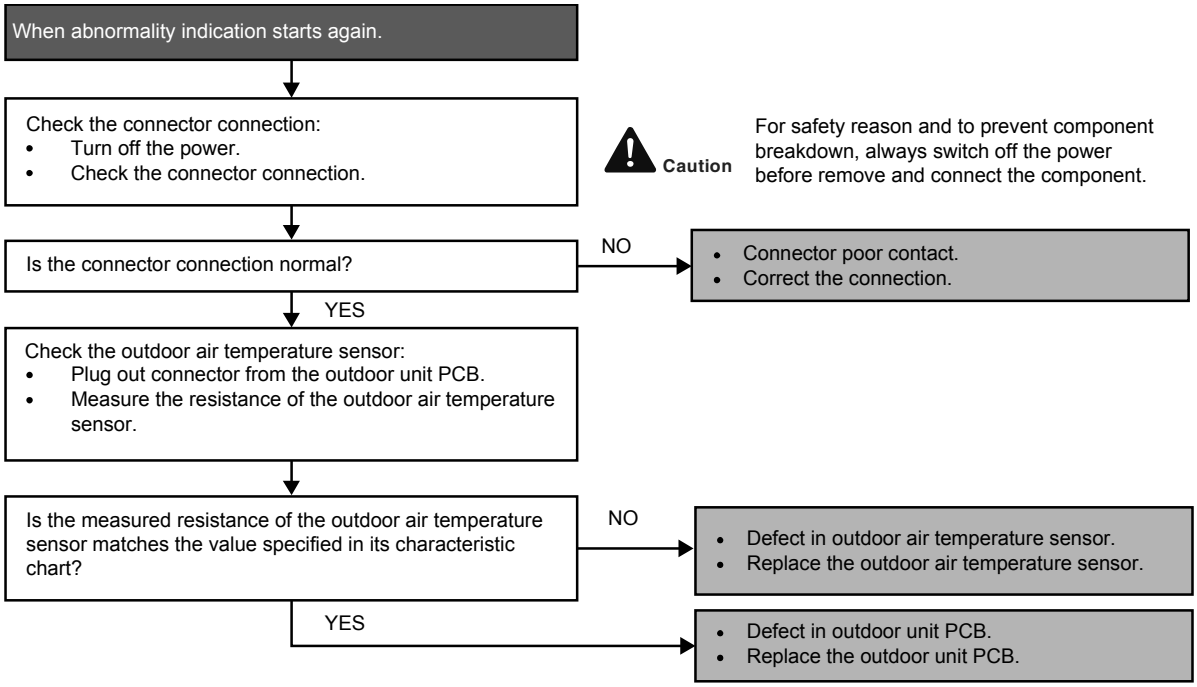

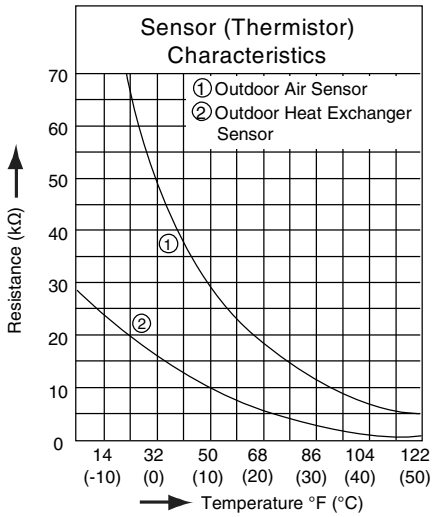

16.4.9 H28 (Outdoor Pipe Temperature Sensor Abnormality)

Malfunction Decision Conditions

- During startup and operation of cooling and heating, the temperatures detected by the outdoor pipe temperature sensor are used to determine sensor errors.

Malfunction Caused

- Faulty connector connection.
- Faulty sensor.
- Faulty PCB.

Troubleshooting

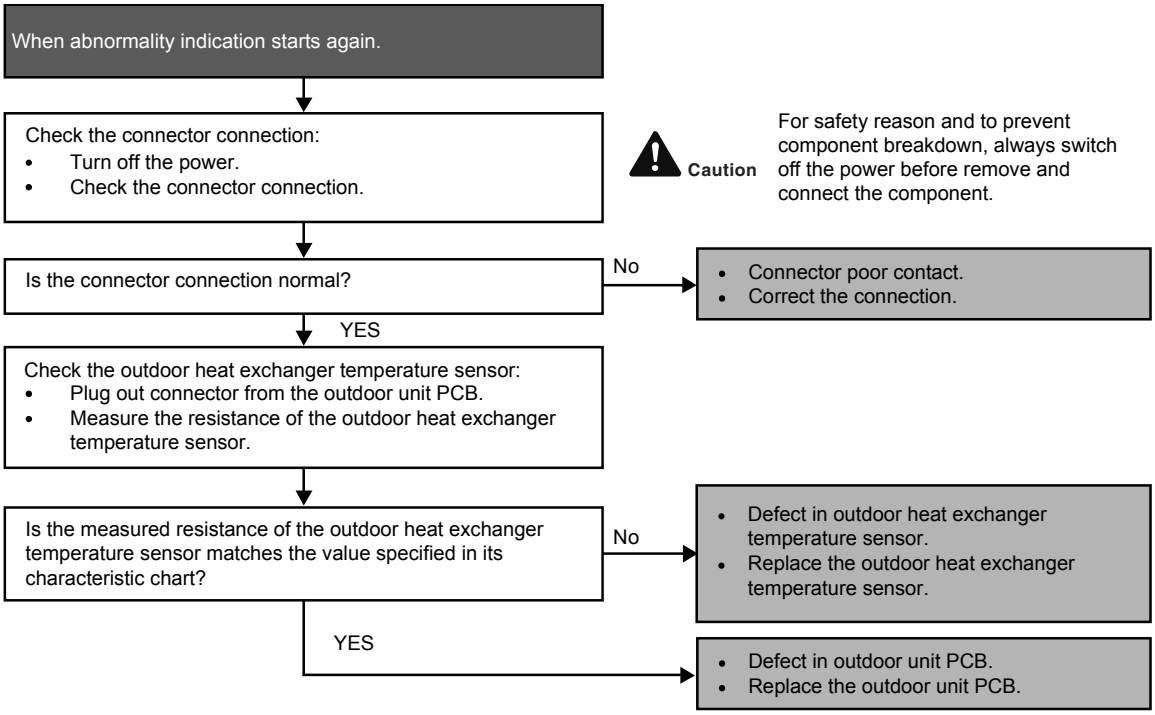

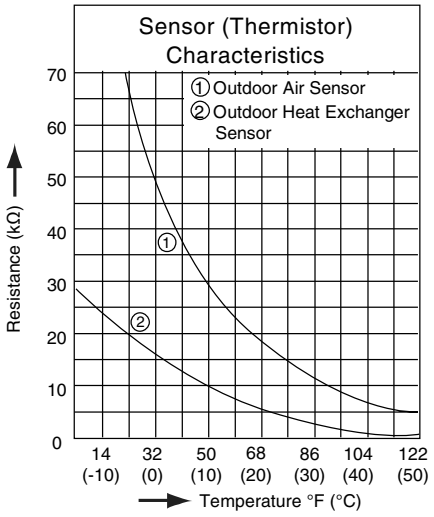

16.4.10 H30 (Compressor Discharge Temperature Sensor Abnormality)

Malfunction Decision Conditions

- During startup and operation of cooling and heating, the temperatures detected by the outdoor discharge pipe temperature sensor are used to determine sensor errors.

Malfunction Caused

- Faulty connector connection.
- Faulty sensor.
- Faulty PCB.

Troubleshooting

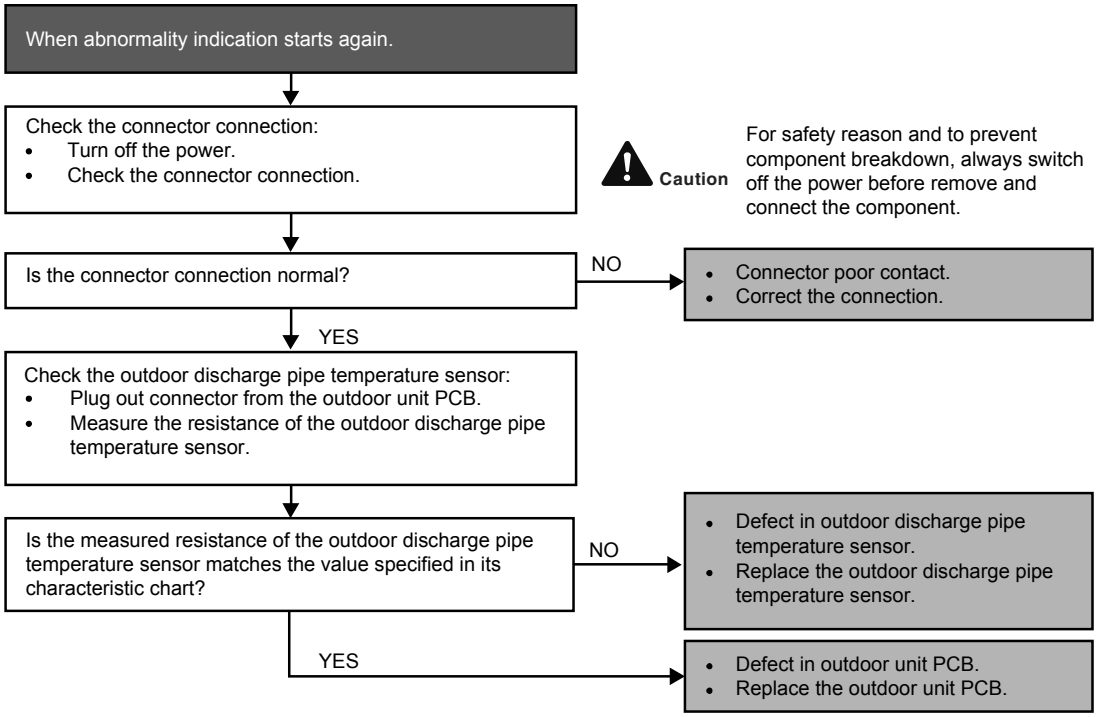

16.4.11 H32 (Outdoor Heat Exchanger Temperature Sensor 2 Abnormality)

Malfunction Decision Conditions

- During startup and operation of cooling and heating, the temperatures detected by the outdoor heat exchanger temperature sensor are used to determine sensor errors.

Malfunction Caused

- Faulty connector connection.
- Faulty sensor.
- Faulty PCB.

Troubleshooting

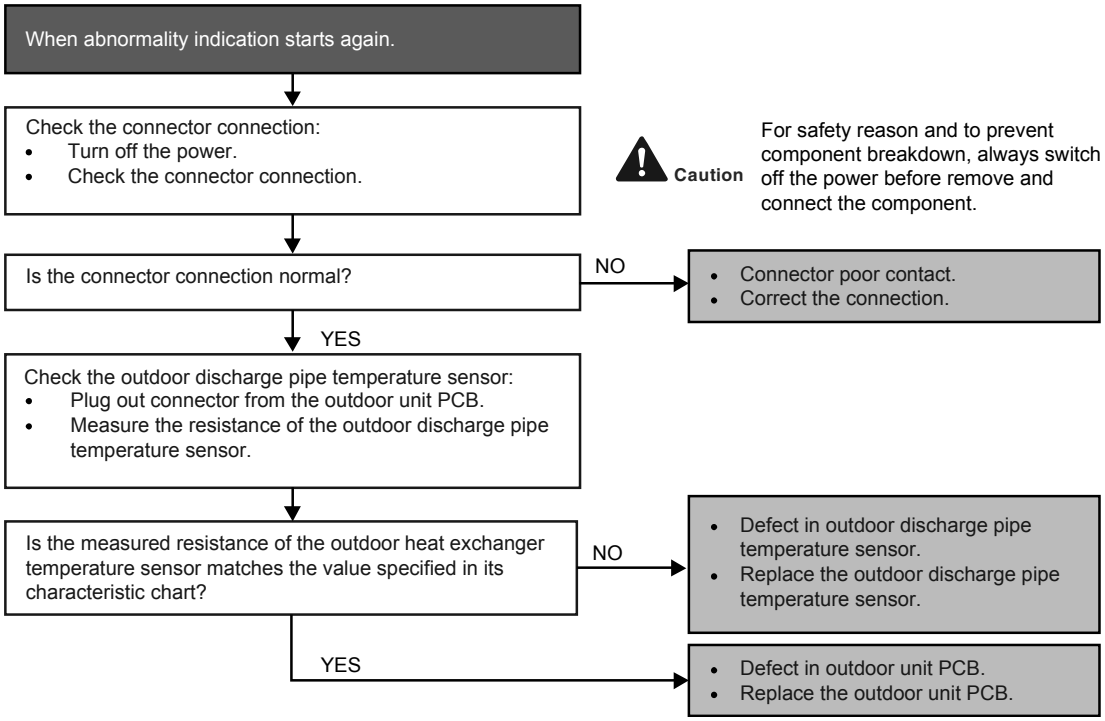

16.4.12 H33 (Unspecified Voltage between Indoor and Outdoor)

Malfunction Decision Conditions

- The supply power is detected for its requirement by the indoor/outdoor transmission.

Malfunction Caused

- Wrong models interconnected.
- Wrong indoor unit and outdoor unit PCBs used.
- Indoor unit or outdoor unit PCB defective.

Troubleshooting

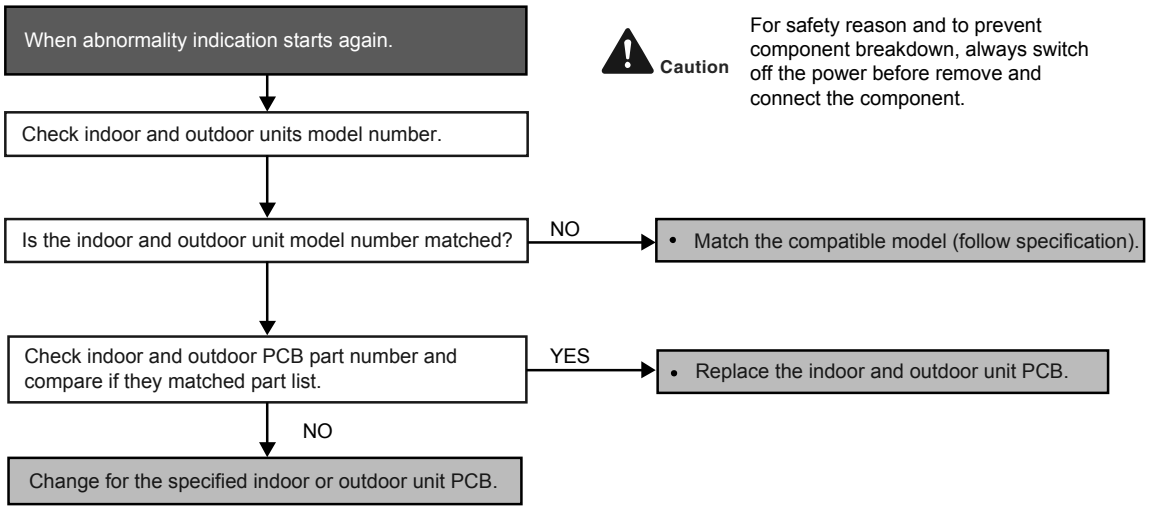

16.4.13 H36 (Outdoor Gas Pipe Sensor Abnormality)

Malfunction Decision Conditions

- During startup and operation of cooling and heating, the temperatures detected by the outdoor gas pipe temperature sensor are used to determine sensor errors.

Malfunction Caused

- Faulty connector connection.
- Faulty sensor.
- Faulty PCB.

Troubleshooting

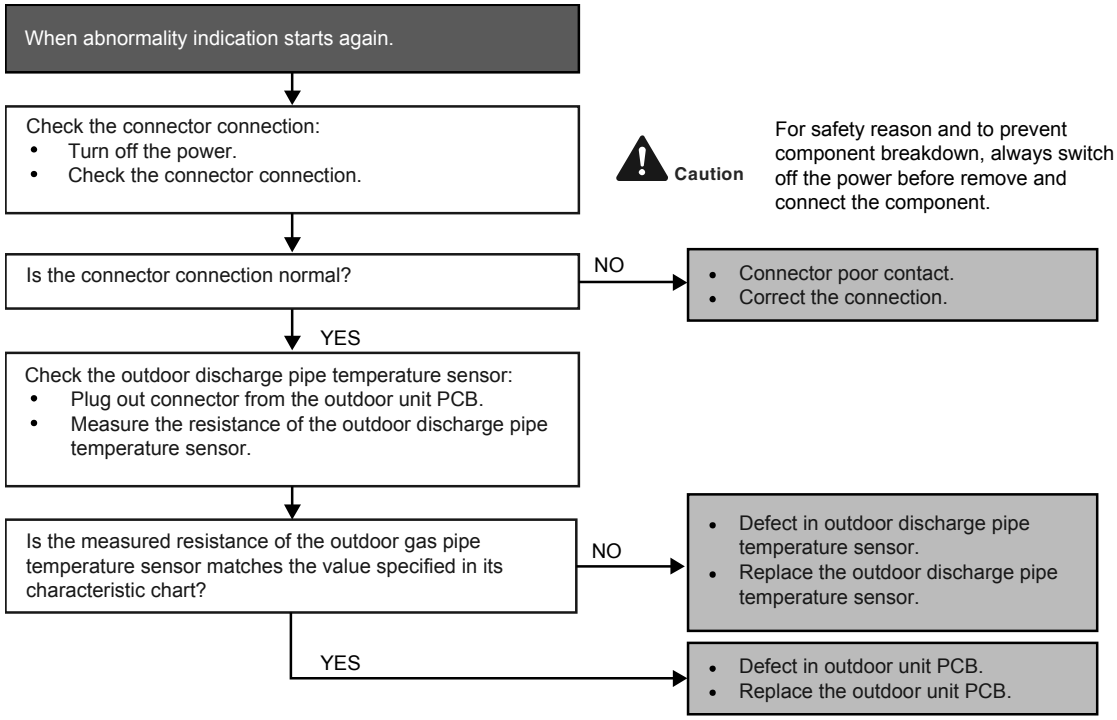

16.4.14 H37 (Outdoor Liquid Pipe Temperature Sensor Abnormality)

Malfunction Decision Conditions

- During startup and operation of cooling and heating, the temperatures detected by the outdoor liquid pipe temperature sensor are used to determine sensor errors.

Malfunction Caused

- Faulty connector connection.
- Faulty sensor.
- Faulty PCB.

Troubleshooting

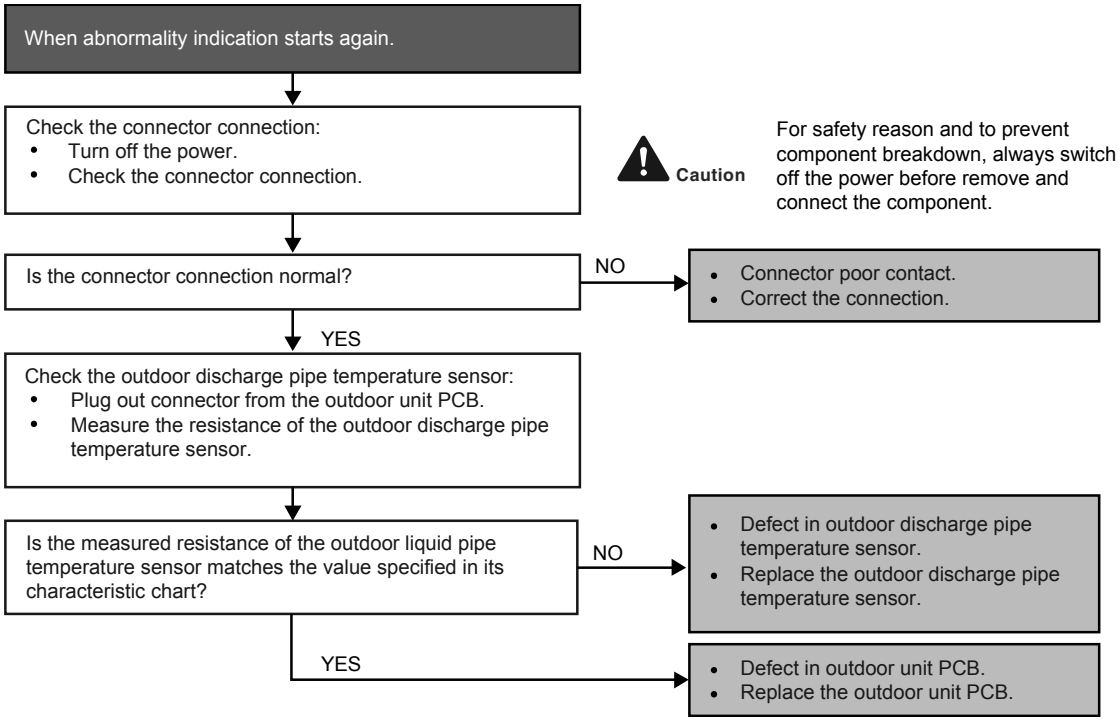

16.4.15 H97 (Outdoor Fan Motor – DC Motor Mechanism Locked) (CU-XE9 ~ 12WKUA)

Malfunction Decision Conditions

- The rotation speed detected by the Hall IC during fan motor operation is used to determine abnormal fan motor.

Malfunction Caused

- Operation stops due to short circuit inside the fan motor winding.
- Operation stops due to breaking of wire inside the fan motor.
- Operation stops due to breaking of fan motor lead wires.
- Operation stops due to Hall IC malfunction.
- Operation error due to faulty outdoor unit PCB.

Troubleshooting

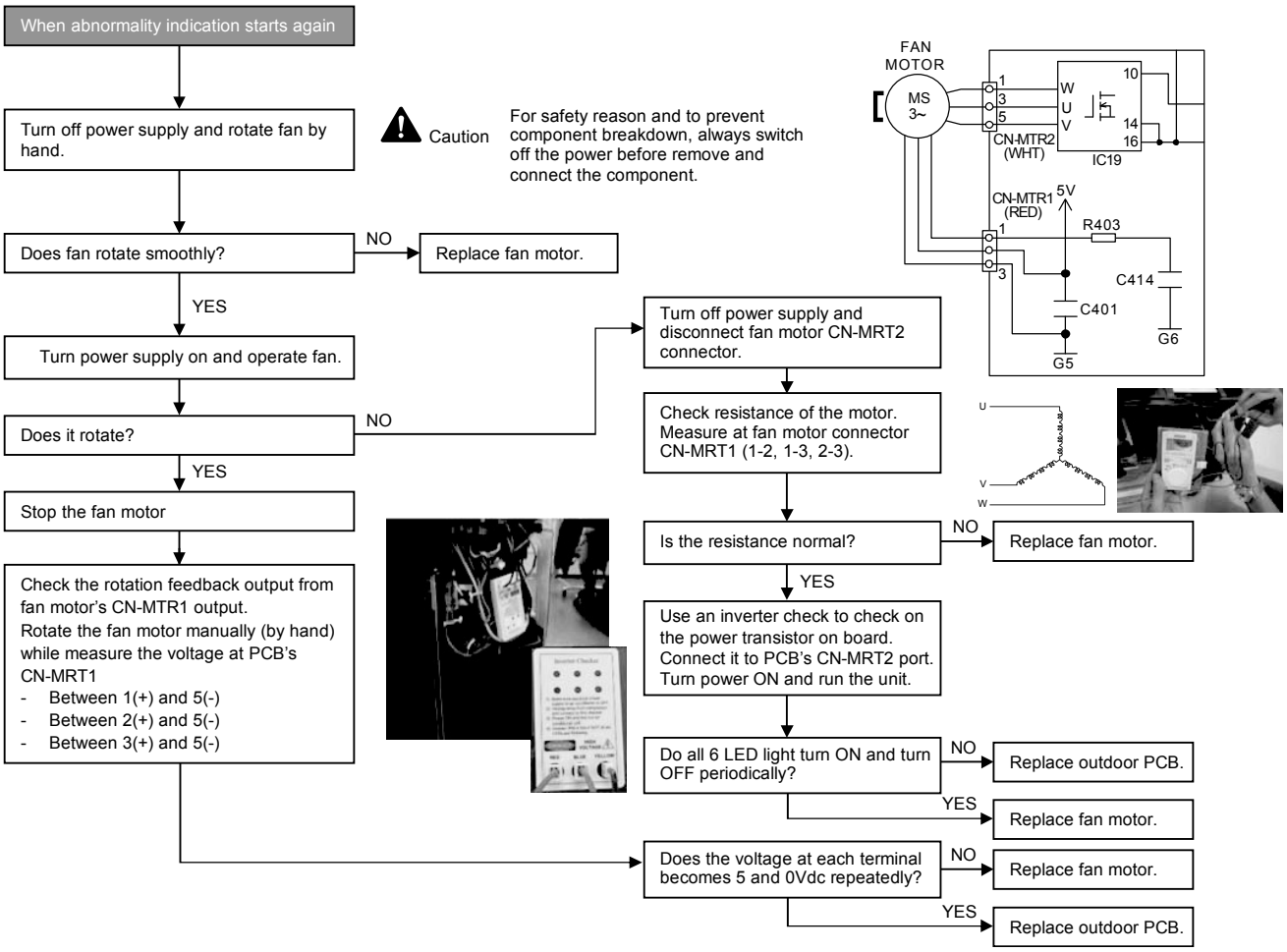

16.4.16 H97 (Outdoor Fan Motor – DC Motor Mechanism Locked) (CU-XE15 ~ 24WKUA)

Malfunction Decision Conditions

- The rotation speed detected by the Hall IC during fan motor operation is used to determine abnormal fan motor.

Malfunction Caused

- Operation stops due to short circuit inside the fan motor winding.
- Operation stops due to breaking of wire inside the fan motor.
- Operation stops due to breaking of fan motor lead wires.
- Operation stops due to Hall IC malfunction.
- Operation error due to faulty outdoor unit PCB.

Troubleshooting

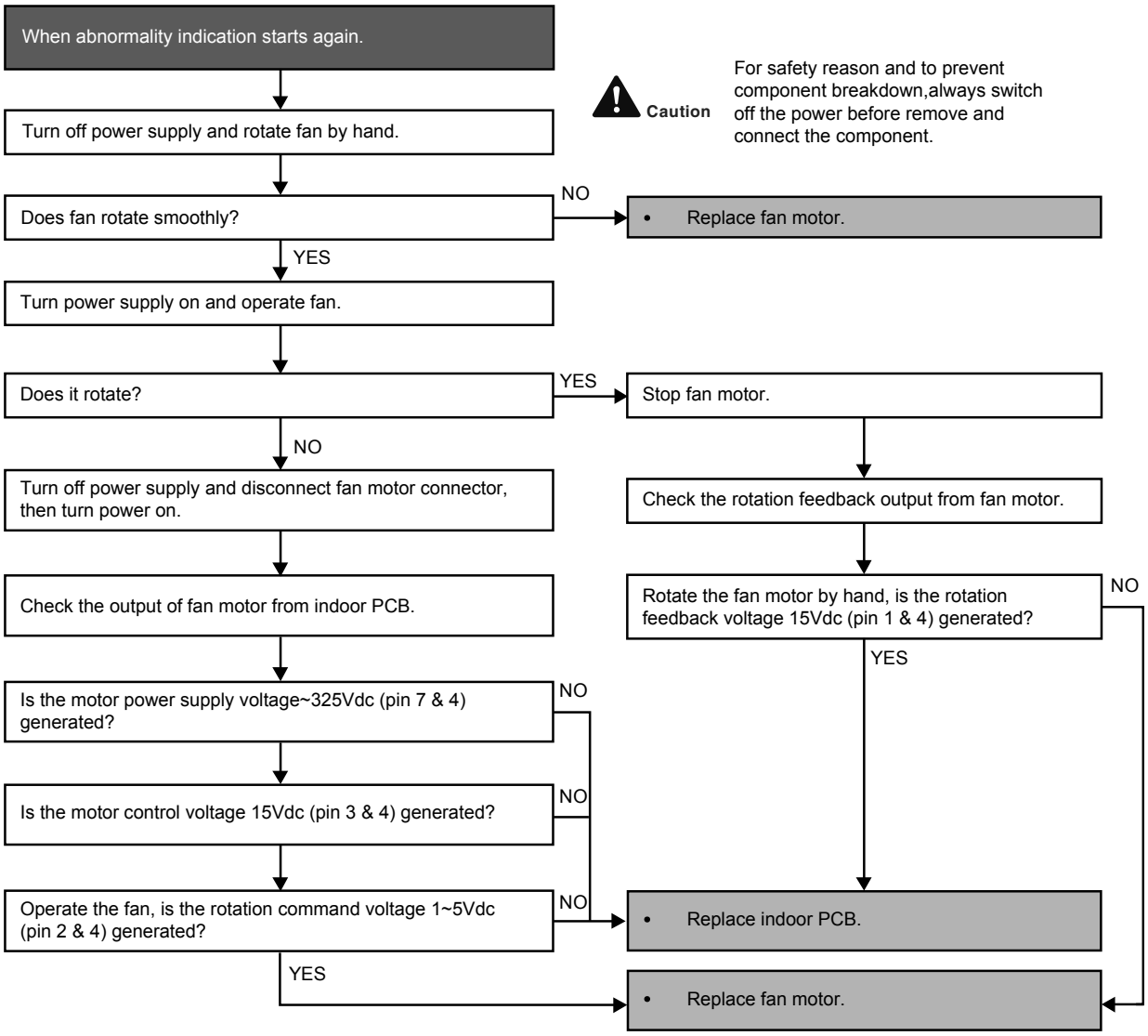

16.4.17 H98 (Error Code Stored in Memory and no alarm is triggered / no TIMER LED flashing)

Malfunction Decision Conditions

- Indoor high pressure is detected when indoor heat exchanger is detecting very high temperature when the unit is operating in heating operation.
- Phenomena: unit is stopping and re-starting very often in heating mode

Malfunction Caused

- Indoor heat exchanger thermistor
- Clogged air filter or heat exchanger
- Over-bent pipe (liquid side)

Troubleshooting

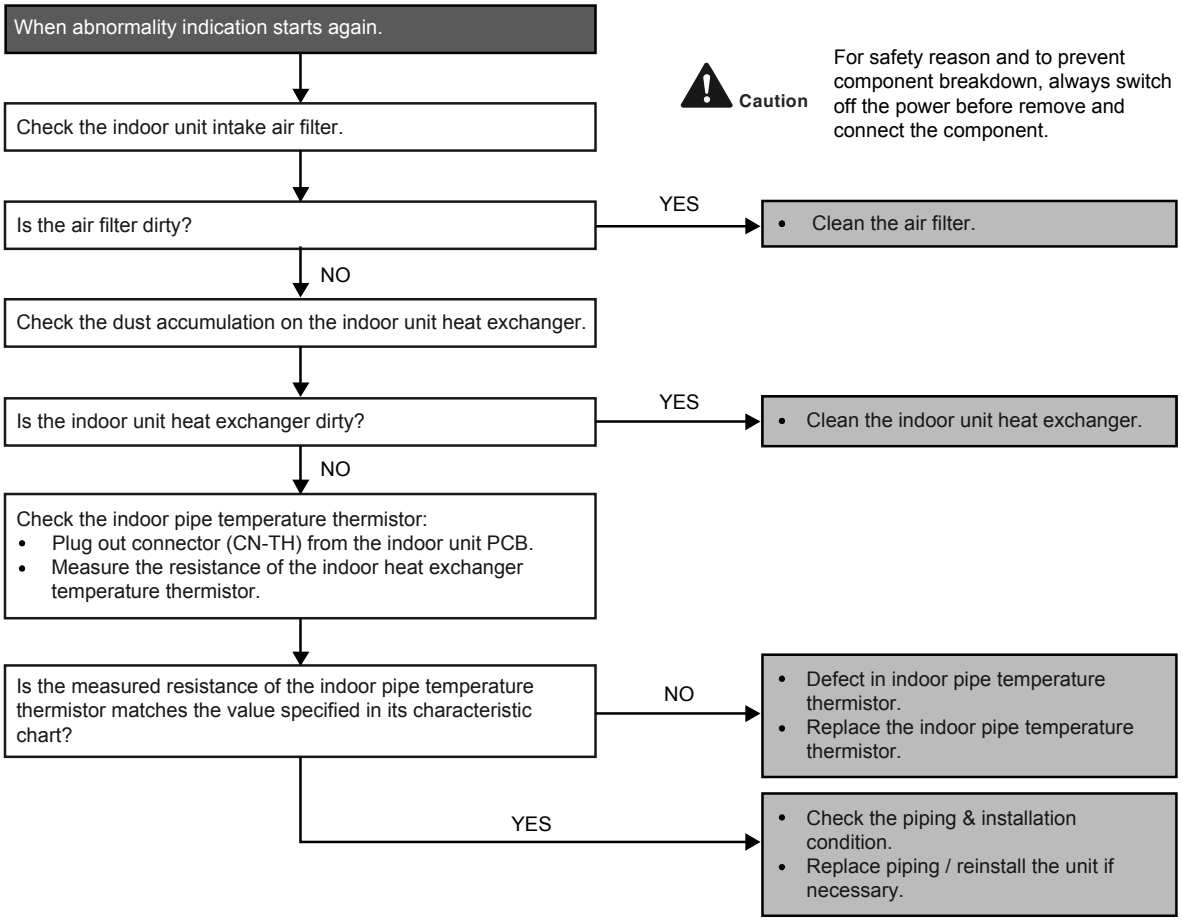

16.4.18 H99 (Indoor Freeze Prevention Protection: Cooling or Soft Dry)

Error Code will not display (no Timer LED blinking) but store in EEPROM

Malfunction Decision Conditions

- Freeze prevention control takes place (when indoor pipe temperature is lower than 35.6°F (2°C))

Malfunction Caused

- Air short circuit at indoor unit
- Clogged indoor unit air filter
- Dust accumulation on the indoor unit heat exchanger
- 2/3 way valve closed
- Faulty indoor unit fan motor
- Refrigerant shortage (refrigerant leakage)
- Clogged expansion valve or strainer
- Faulty indoor pipe temperature sensor
- Faulty indoor unit PCB

Troubleshooting

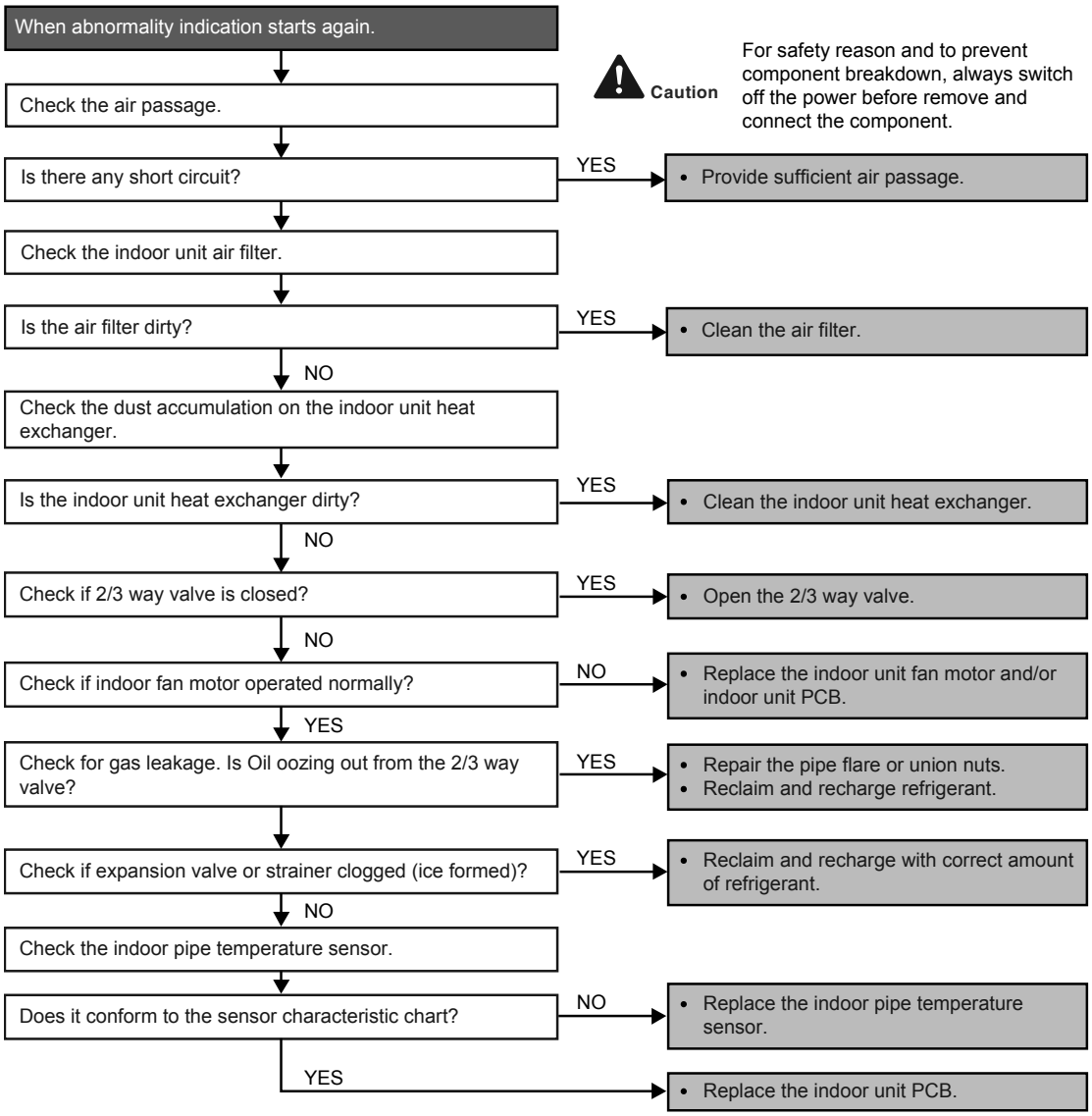

16.4.19 F11 (4-way Valve Switching Failure)

Malfunction Decision Conditions

- When indoor heat exchanger is cold during heating (except deice) or when indoor heat exchanger is hot during cooling and compressor operating, the 4-way valve is detected as malfunction.

Malfunction Caused

- Indoor heat exchanger (pipe) thermistor
- 4-way valve malfunction

Troubleshooting

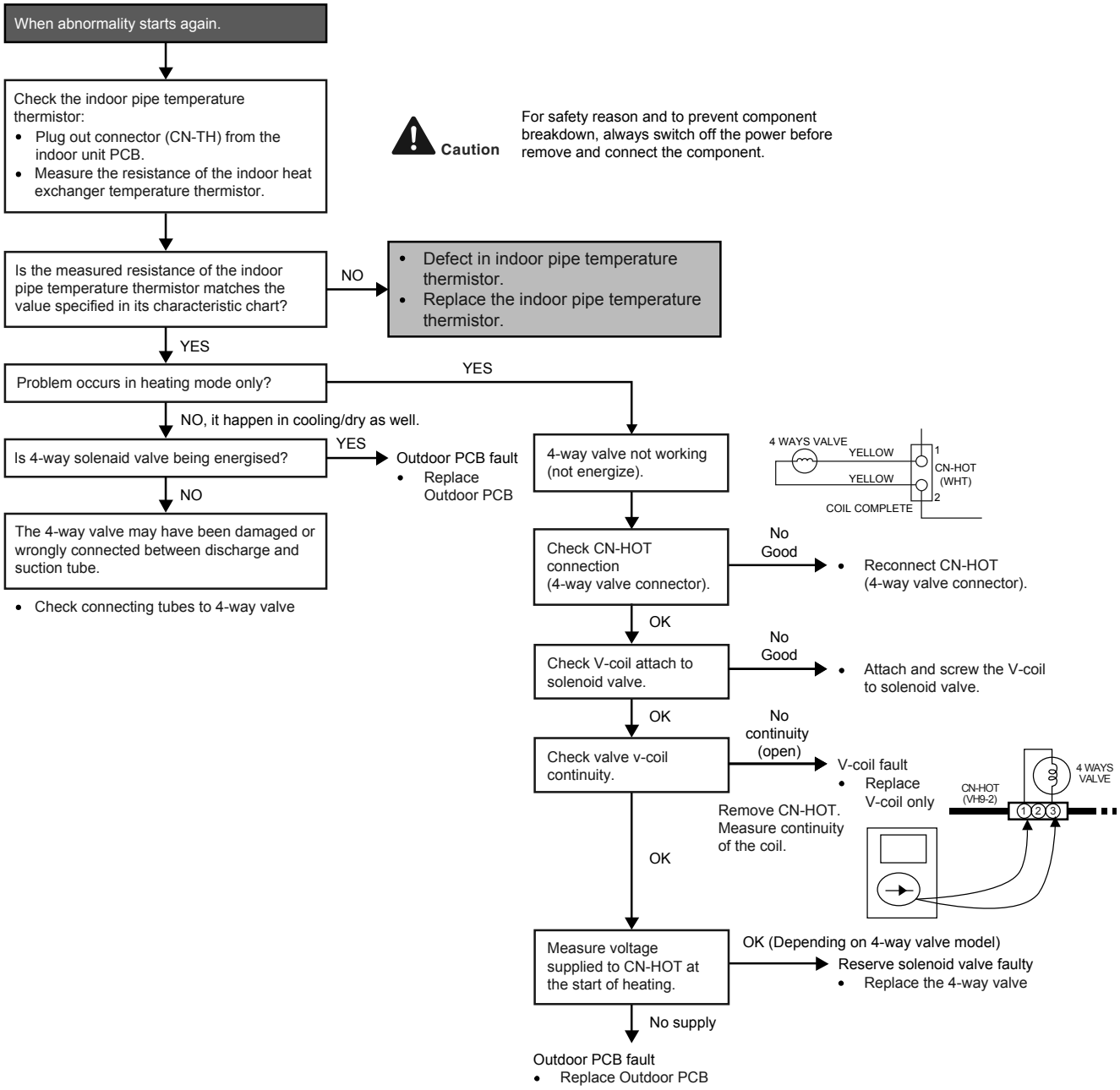

* Check gas side pipe – for hot gas flow in cooling mode

16.4.20 F17 (Indoor Standby Units Freezing Abnormality)

Malfunction Decision Conditions

- When the different between indoor intake air temperature and indoor pipe temperature is above 50°F (10°C) or indoor pipe temperature is below 30.2°F (-1.0°C).

  Remark:
  When the indoor standby unit is freezing, the outdoor unit transfers F17 error code to the corresponding indoor unit and H39 to other indoor unit(s).

Malfunction Caused

- Wrong wiring connection
- Faulty sensor
- Faulty expansion valve

Troubleshooting

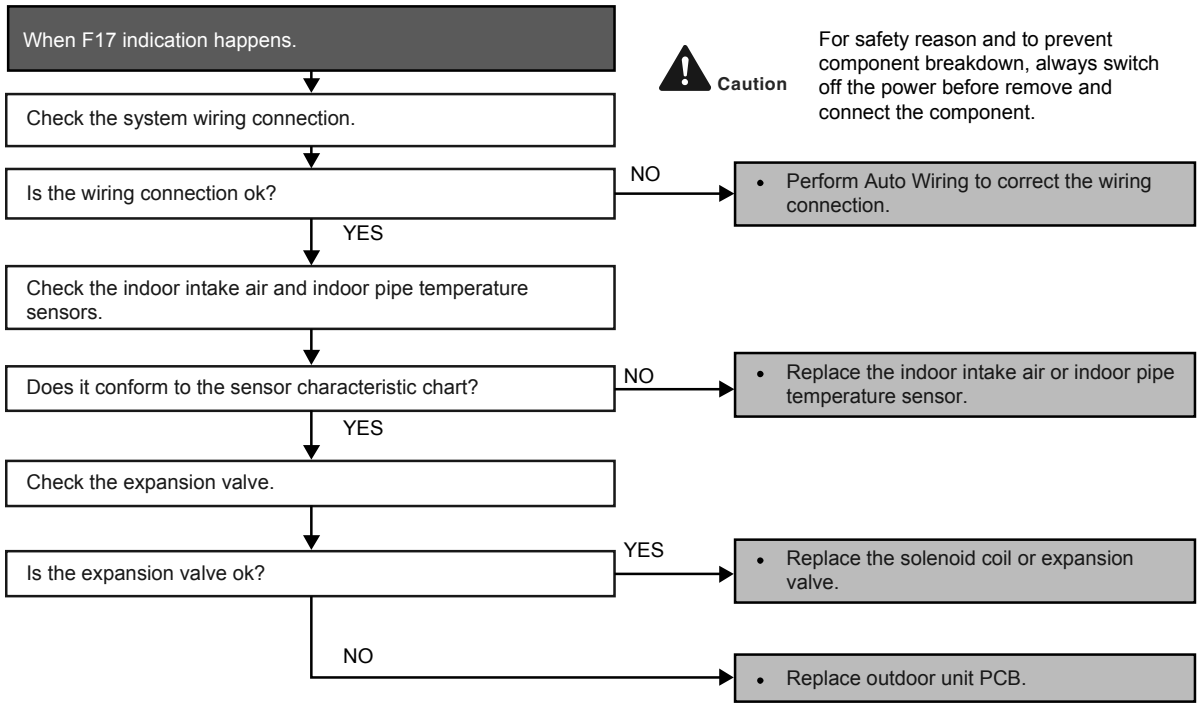

16.4.21 F90 (Power Factor Correction Protection)

Malfunction Decision Conditions

- To maintain DC voltage level supply to power transistor.
- To detect high DC voltage level after rectification.

Malfunction Caused

- During startup and operation of cooling and heating, when Power Factor Correction (PFC) protection circuitry at the outdoor unit main PCB senses abnormal DC voltage level for power transistors.
- When DC voltage detected is LOW, transistor switching will turn ON by controller to push-up the DC level.
- When DC voltage detected is HIGH (391Vdc – 425Vdc), active LOW signal will send by the controller to turn OFF relay RY-C.

Troubleshooting

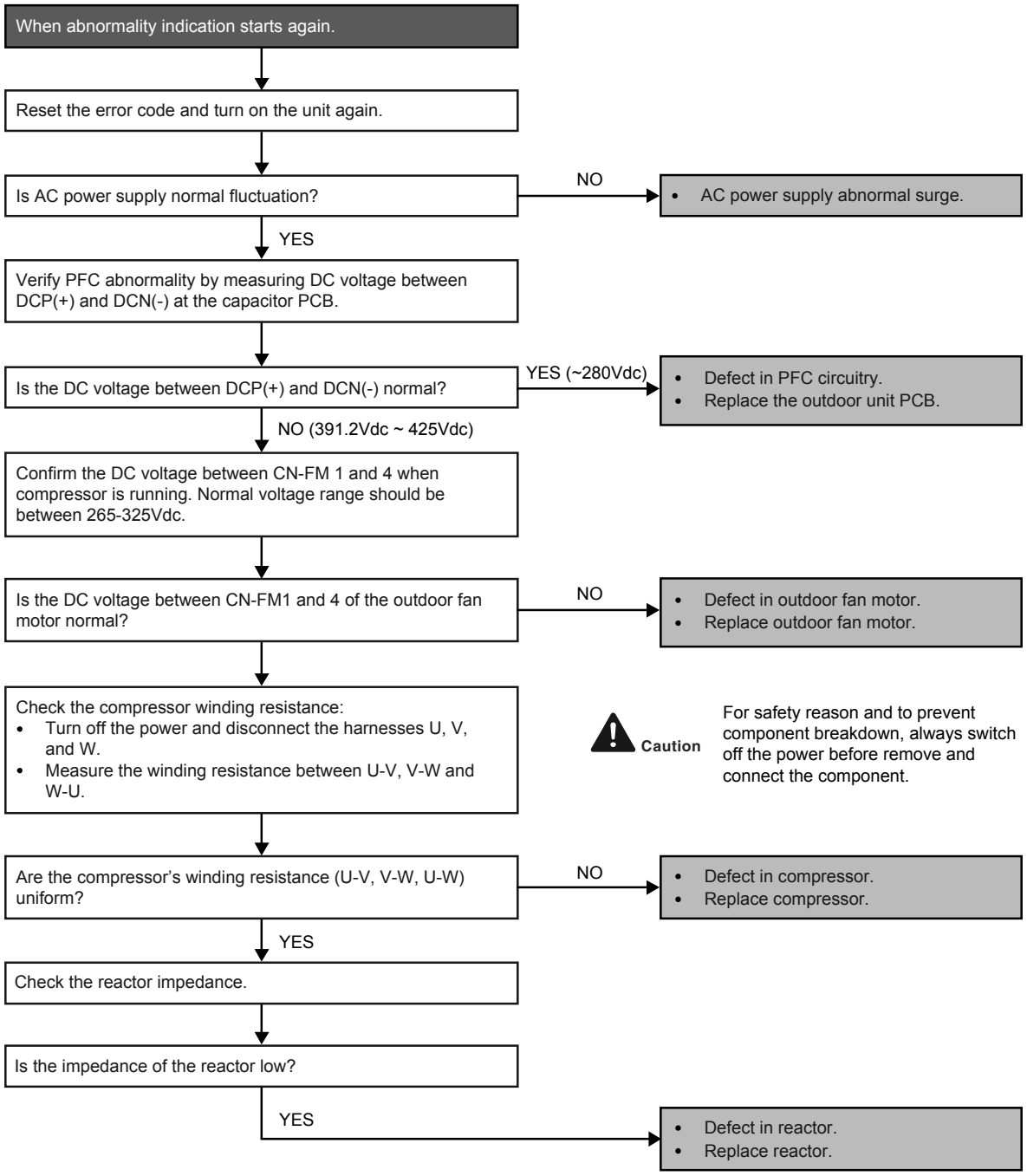

16.4.22 F91 (Refrigeration Cycle Abnormality)

Malfunction Decision Conditions

- The input current is low while the compressor is running at higher than the setting frequency.

Malfunction Caused

- Lack of gas.
- 3-way valve close.

Troubleshooting

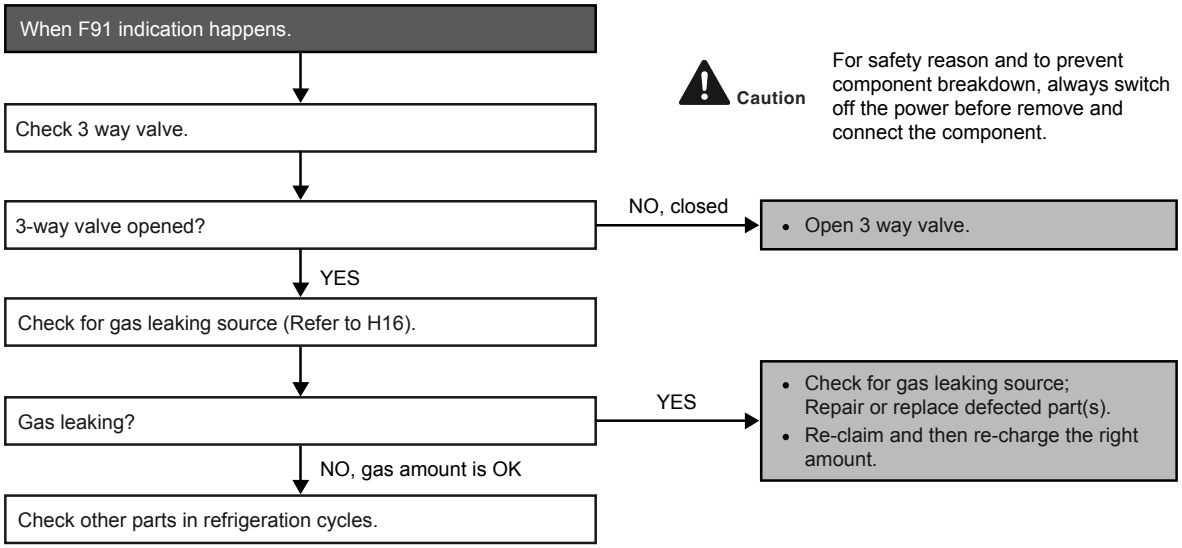

16.4.23 F93 (Compressor Rotation Failure)

Malfunction Decision Conditions

- A compressor rotation failure is detected by checking the compressor running condition through the position detection circuit.

Malfunction Caused

- Compressor terminal disconnect
- Faulty Outdoor PCB
- Faulty compressor

Troubleshooting

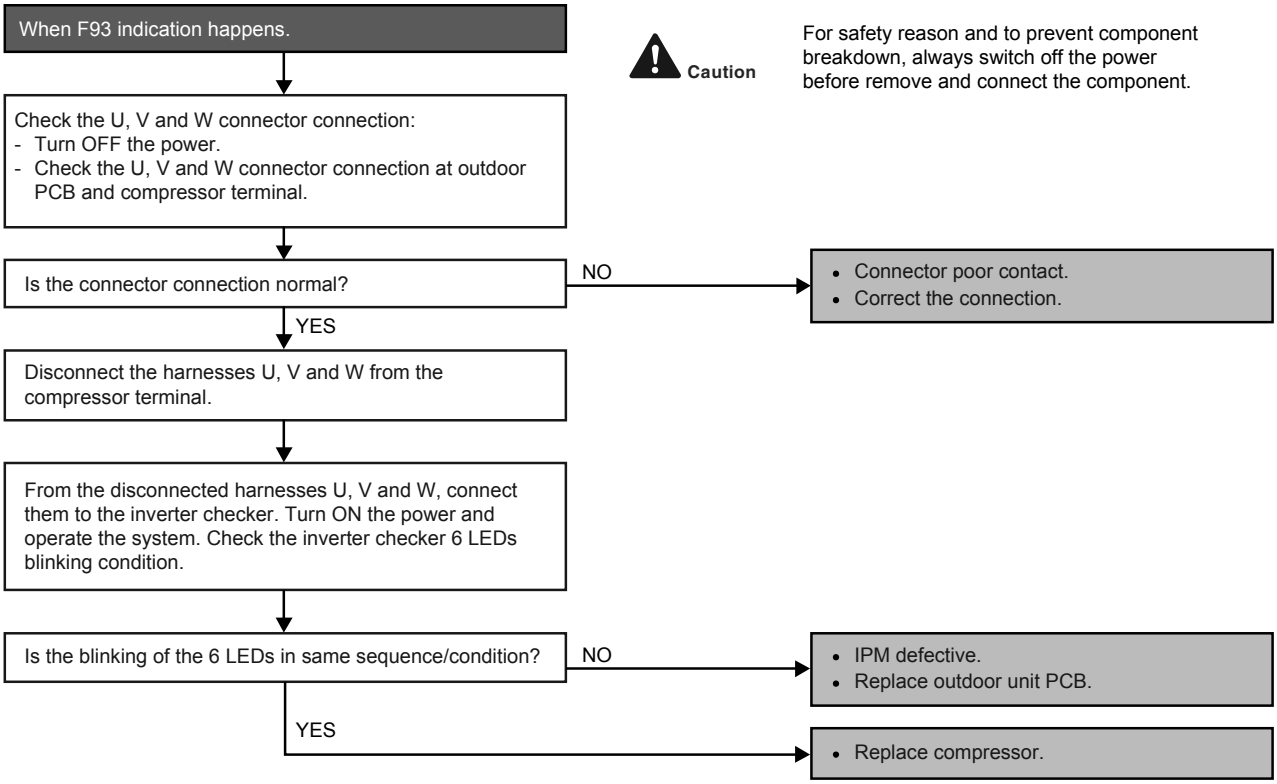

16.4.24 F95 (Outdoor High Pressure Protection: Cooling or Soft Dry)

Malfunction Decision Conditions

- During operation of cooling or soft dry, when outdoor unit heat exchanger high temperature data is detected by the outdoor unit heat exchanger thermistor.

Malfunction Caused

- Outdoor heat exchanger temperature rise due to short-circuit of hot discharge air flow.
- Outdoor heat exchanger temperature rise due to defective of outdoor fan motor.
- Outdoor heat exchanger temperature rise due to defective outdoor heat exchanger thermistor.
- Outdoor heat exchanger temperature rise due to defective of outdoor unit PCB.

Troubleshooting

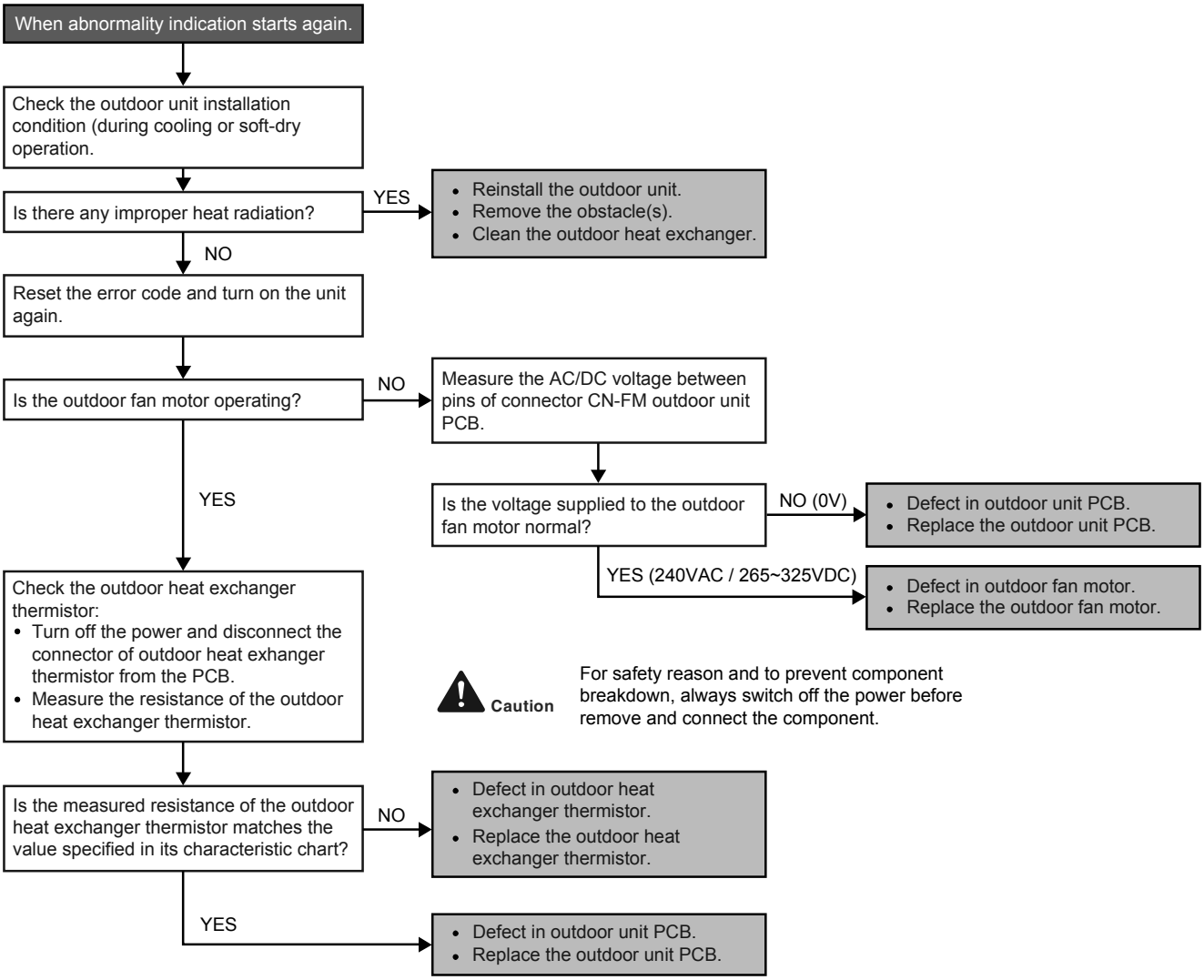

16.4.25 F96 (IPM Overheating)

Malfunction Decision Conditions

- During operating of cooling and heating, when IPM temperature data 212°F (100°C) is detected by the IPM temperature sensor.
  Multi Models only
  - Compressor Overheating: During operation of cooling and heating, when the compressor OL is activated.
  - Heat Sink Overheating: During operation of cooling and heating, when heat sink temperature data 194°F (90°C) is detected by the heat sink temperature sensor.

Malfunction Caused

- IPM overheats due to short circuit of hot discharge air flow.
- IPM overheats due to defective of outdoor fan motor.
- IPM overheats due to defective of internal circuitry of IPM.
- IPM overheats due to defective IPM temperature sensor.
  Multi Models Only
  - Compressor OL connector poor contact.
  - Compressor OL faulty.

Troubleshooting

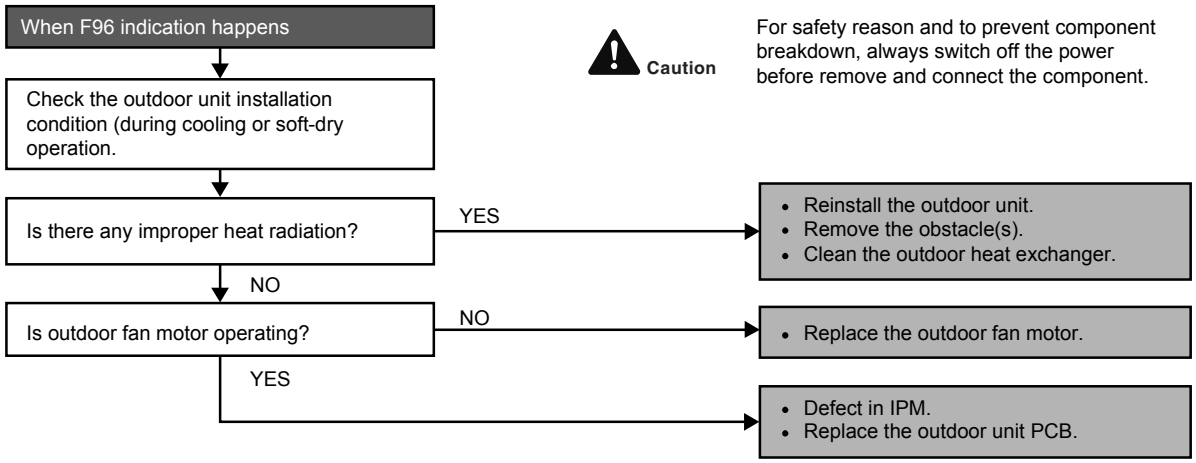

16.4.26 F97 (Compressor Overheating)

Malfunction Decision Conditions

- During operation of cooling and heating, when compressor tank temperature data 233.6°F (112°C) is detected by the compressor tank temperature sensor.

Malfunction Caused

- Faulty compressor tank temperature sensor
- 2/3 way valve closed
- Refrigerant shortage (refrigerant leakage)
- Faulty outdoor unit PCB
- Faulty compressor

Troubleshooting

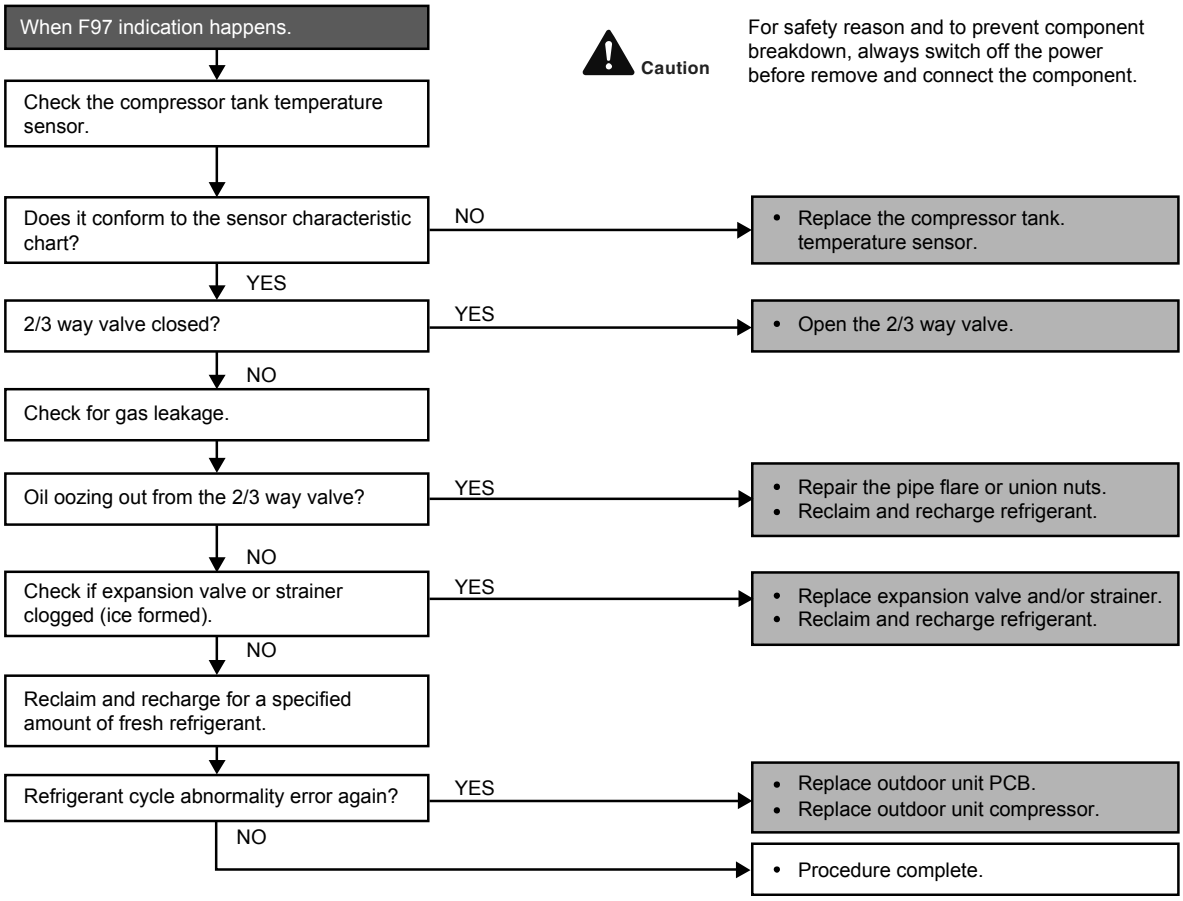

16.4.27 F98 (Input Over Current Detection)

Malfunction Decision Conditions

- During operation of cooling and heating, when an input over-current (X value in Total Running Current Control) is detected by checking the input current value being detected by current transformer (CT) with the compressor running.

Malfunction Caused

- Excessive refrigerant.
- Faulty outdoor unit PCB.

Troubleshooting

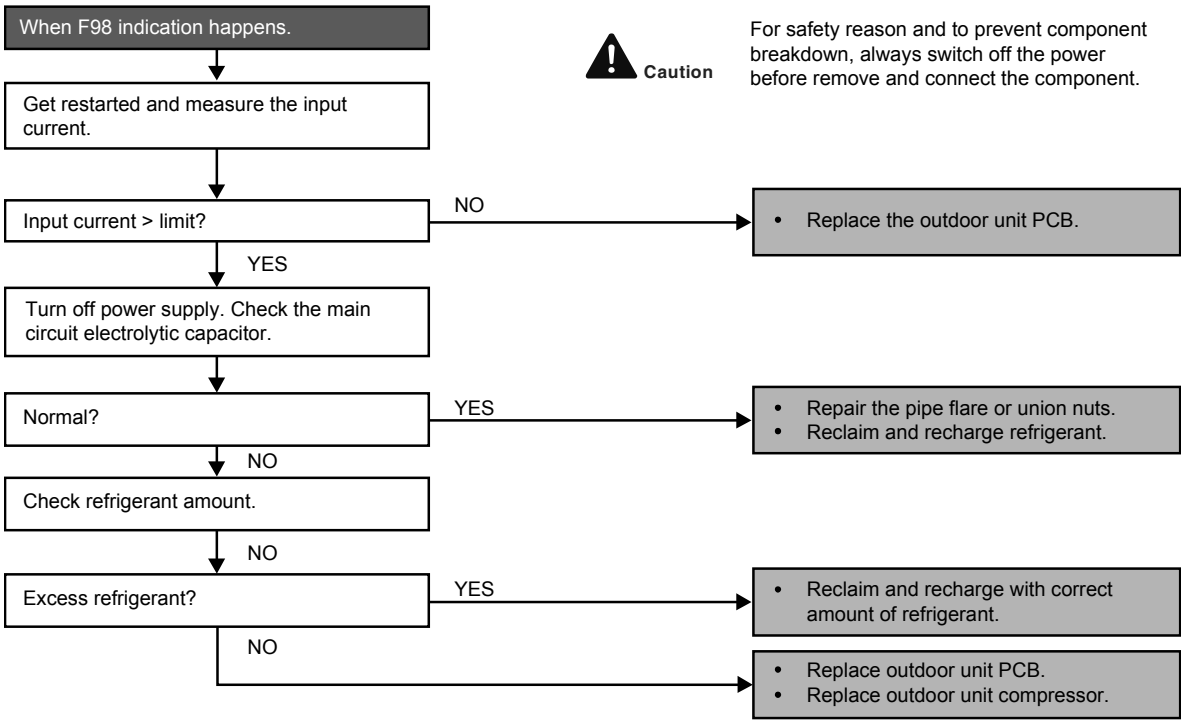

16.4.28 F99 (DC Peak Detection)

Malfunction Decision Conditions

During startup and operation of cooling and heating, when inverter DC peak data is received by the outdoor internal DC Peak sensing circuitry.

Malfunction Caused

- DC current peak due to compressor failure.
- DC current peak due to defective power transistor(s).
- DC current peak due to defective outdoor unit PCB.
- DC current peak due to short circuit.

Troubleshooting

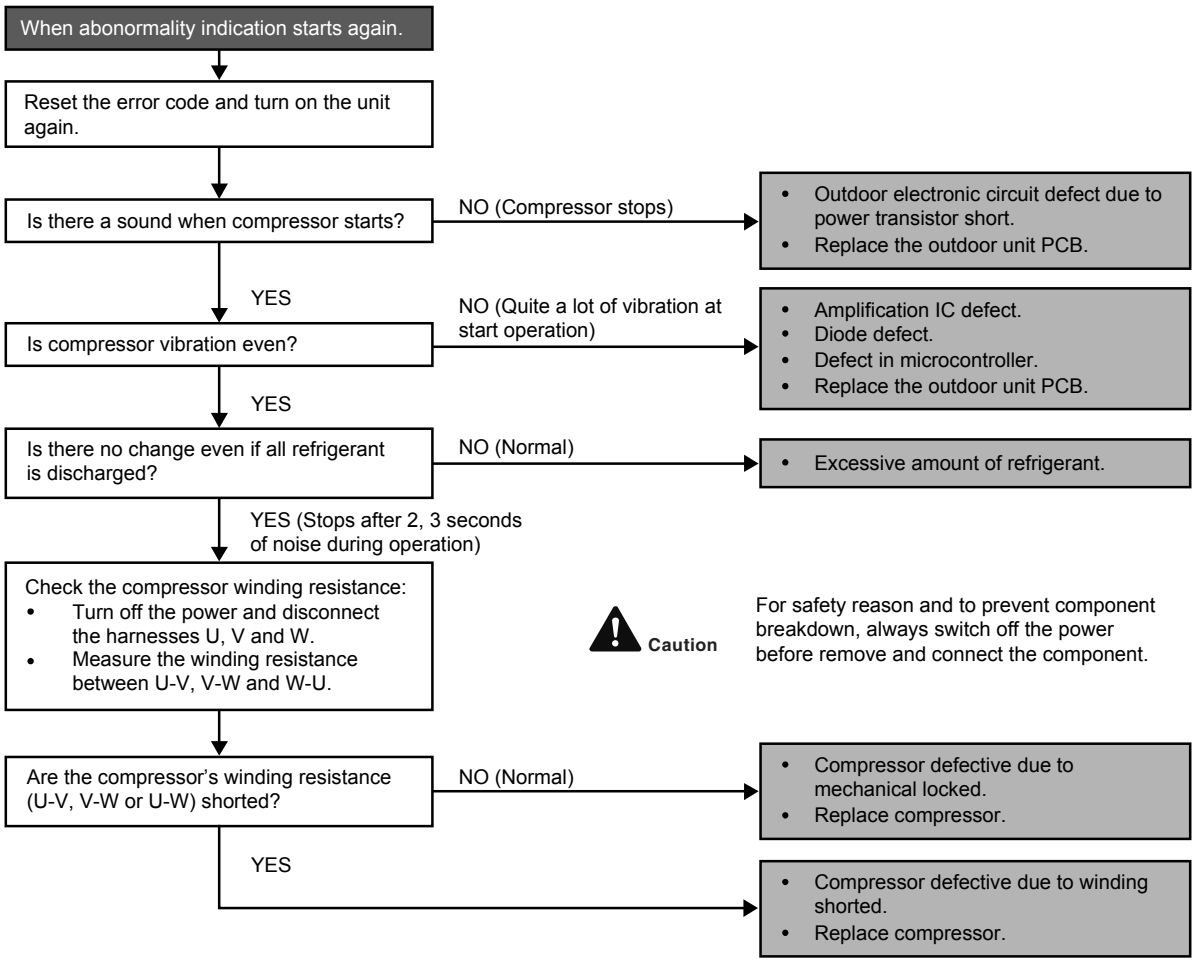

17. Disassembly and Assembly Instructions

⚠ WARNING

High Voltage is generated in the electrical parts area by the capacitor. Ensure that the capacitor has discharged sufficiently before proceeding with repair work. Failure to heed this caution may result in electric shocks.

17.1 CS-XE9WKUAW CS-XE12WKUAW CS-XE15WKUAW

17.1.1 Indoor Electronic Controllers, Cross Flow Fan and Indoor Fan Motor Removal Procedures

17.1.1.1 To Remove Horizontal Vane and Front Grille

1. Lift to open horizontal vane gently.

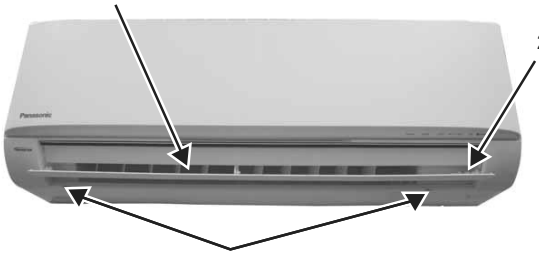

2. Slide the lever from locked position into release position and remove the horizontal vane.

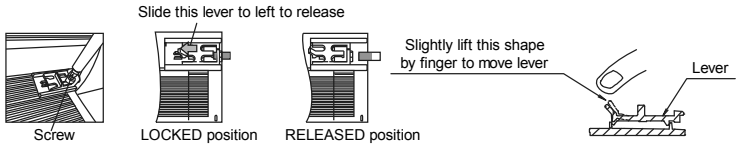

3. Remove the 2 caps and 2 screws on the front frille.

When reinstalling the front grille, carry out above step 2 - 3 in the reverse order.

* When remove the screw, ensure opposite side of vane is supported to prevent vane damage by over push.

Figure 1

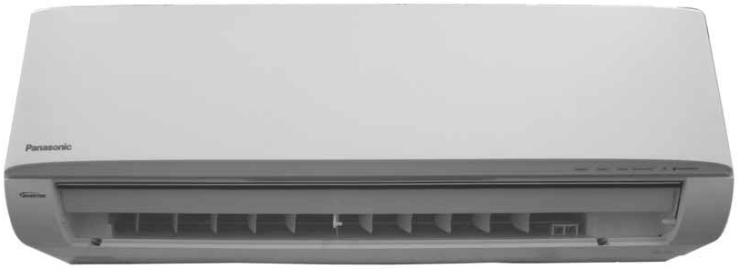

4. Hold both sides of the front grille and remove it by pulling up and toward yourself gently.

Figure 2

17.1.1.2 To Remove Electronic Controller



Figure 3

6. Detach the earth wire screw, terminal wire (Brown), terminal wire (Grey), terminal wire (Black), terminal wire (White), terminal wire (Red) and earth wire (Green).

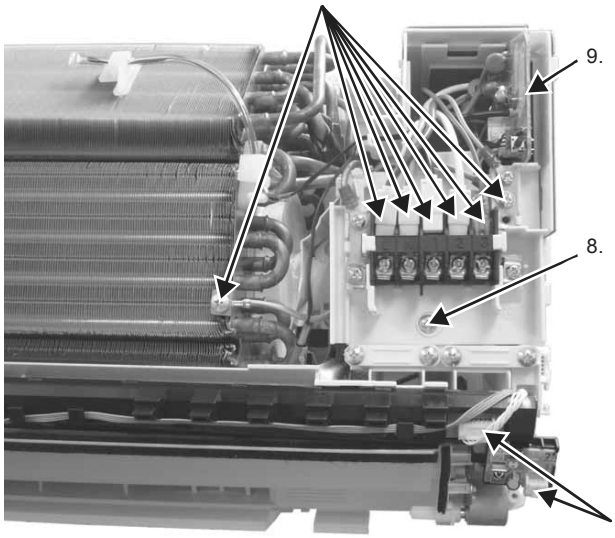

Figure 4

10. Detach all connectors as labled from the electronic controller. Then pull out electronic controller gently.

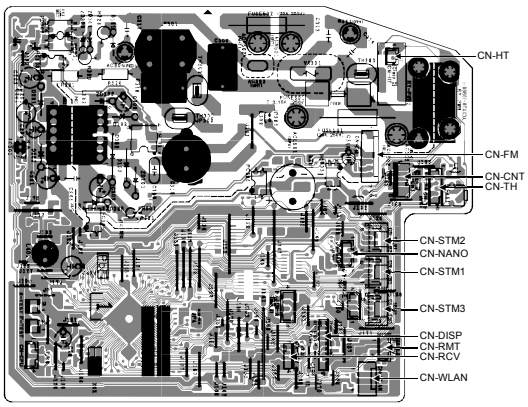

Figure 5

17.1.1.3 To Remove Discharge Grille

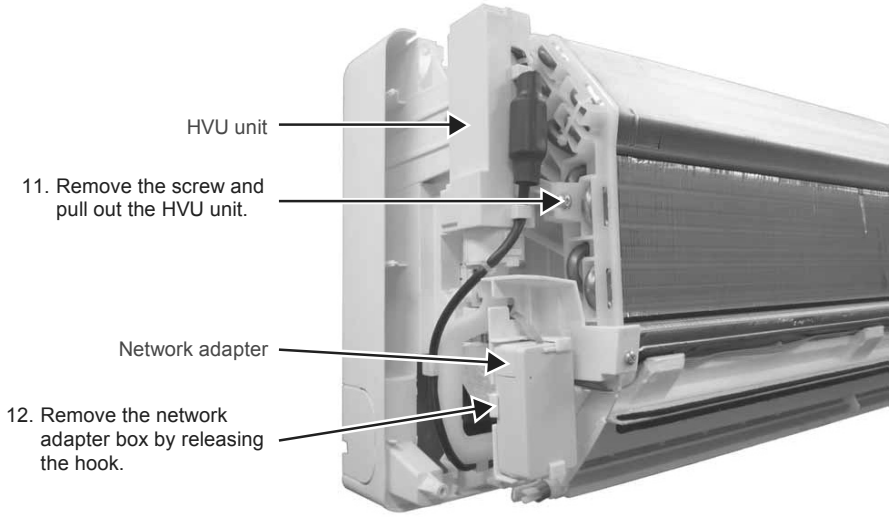

Figure 6

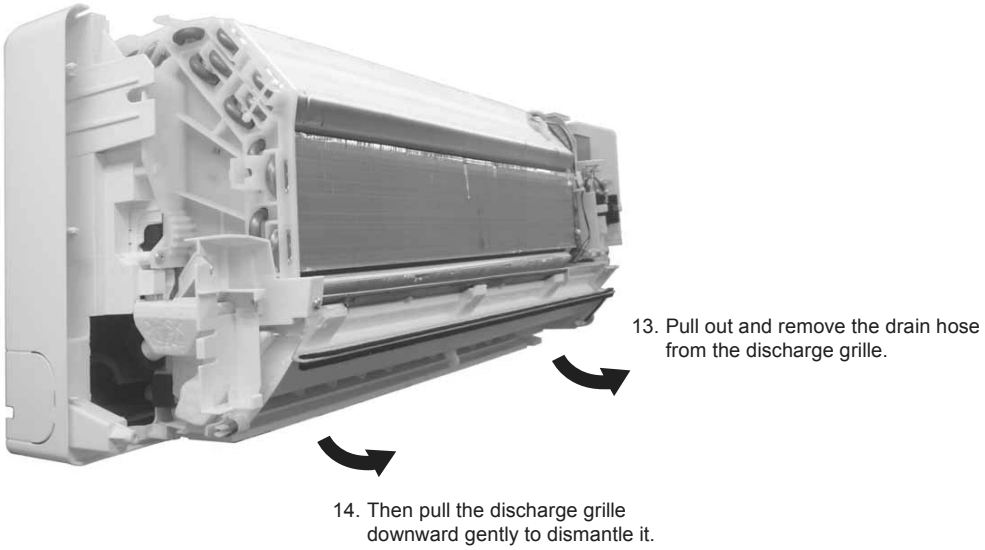

Figure 7

17.1.1.4 To Remove Control Board

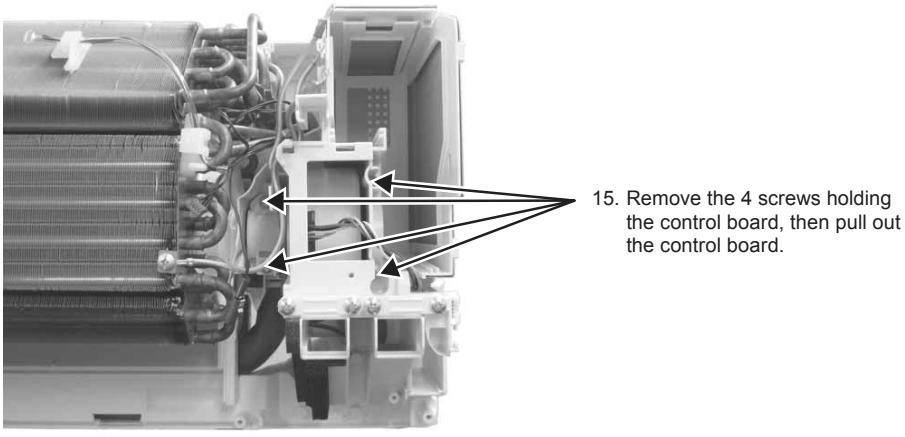

Figure 8

17.1.1.5 To Remove Cross Flow Fan and Indoor Fan Motor

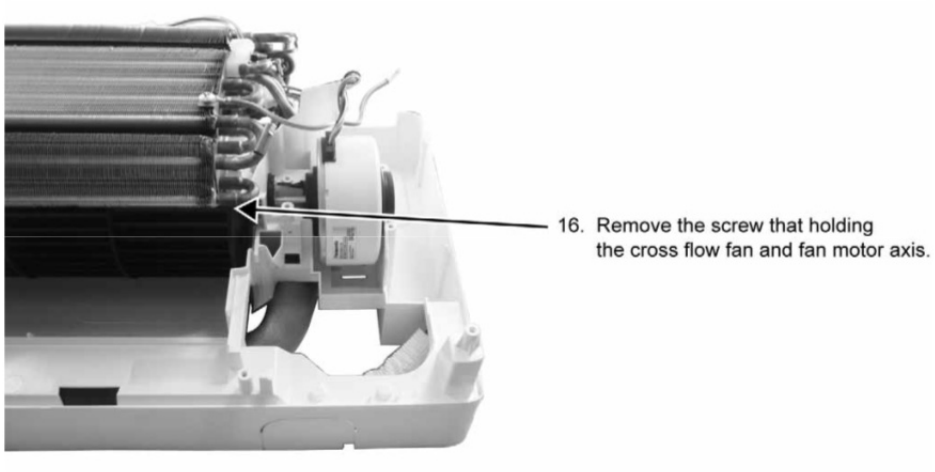

Figure 9

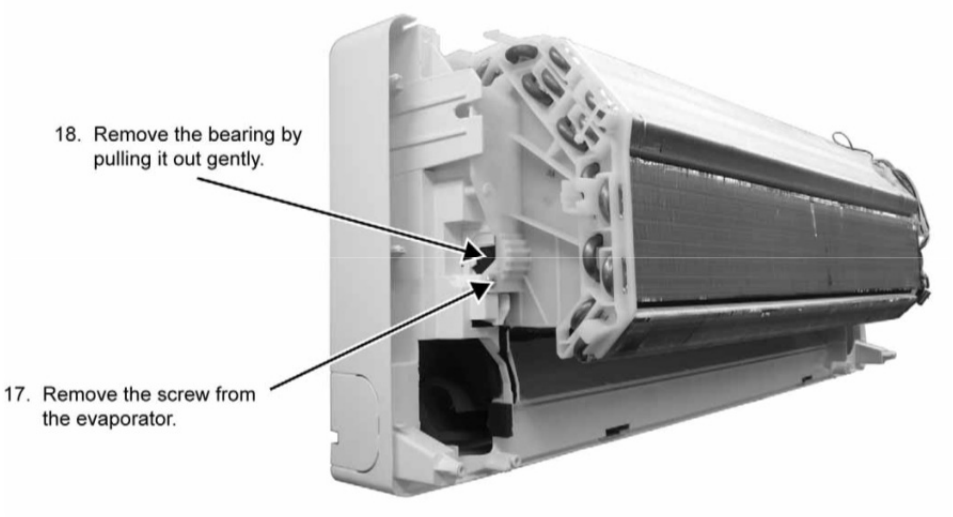

Figure 10

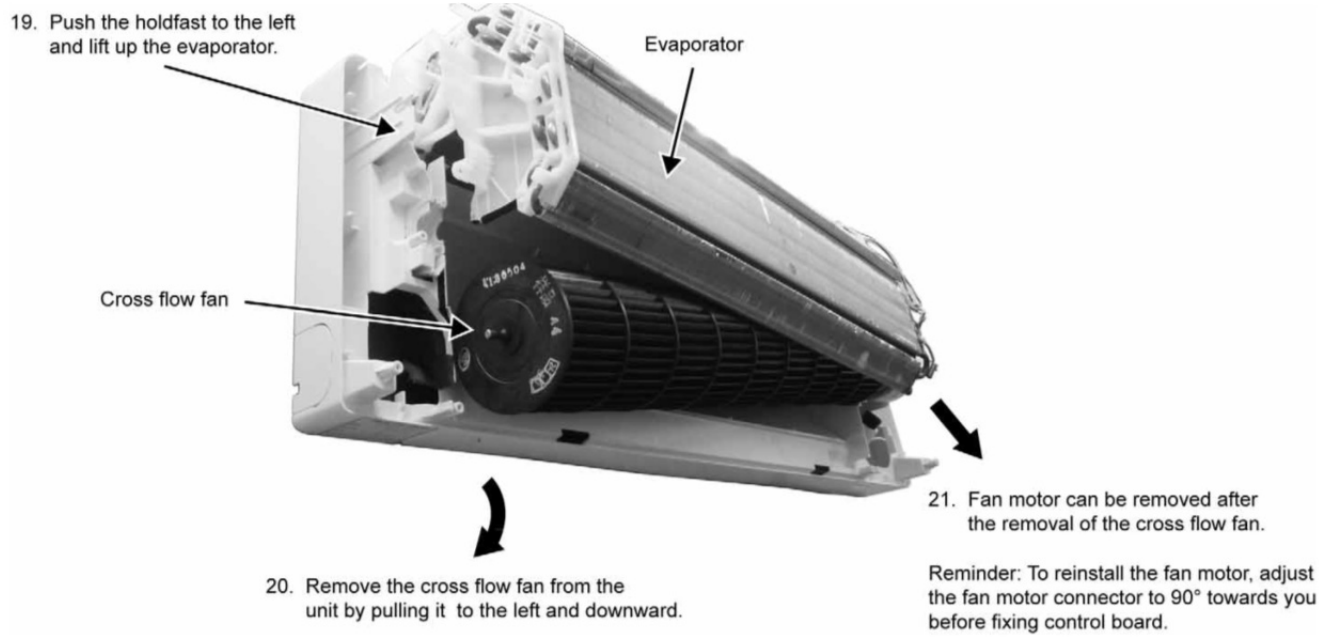

Figure 11

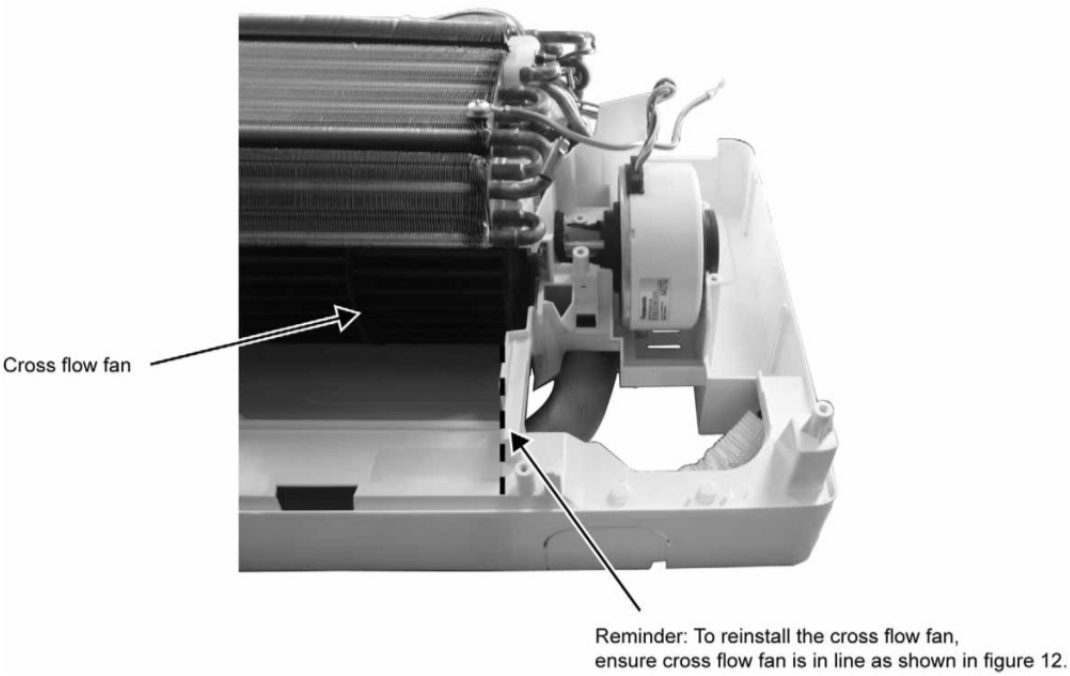
Cross flow fan
Reminder: To reinstall the cross flow fan,
ensure cross flow fan is in line as shown in figure 12.

Figure 12

⚠ WARNING

High Voltage is generated in the electrical parts area by the capacitor. Ensure that the capacitor has discharged sufficiently before proceeding with repair work. Failure to heed this caution may result in electric shocks.

17.2 CS-XE18WKUAW CS-XE24WKUAW

17.2.1 Indoor Electronic Controllers, Cross Flow Fan and Indoor Fan Motor Removal Procedures

17.2.1.1 To Remove Front Grille

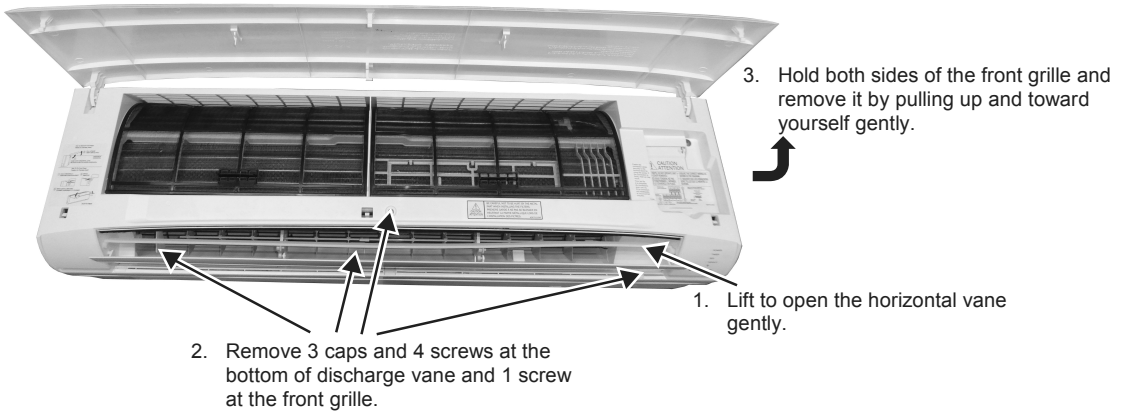

Figure 1

17.2.1.2 To Remove Electronic Controllers



Figure 2

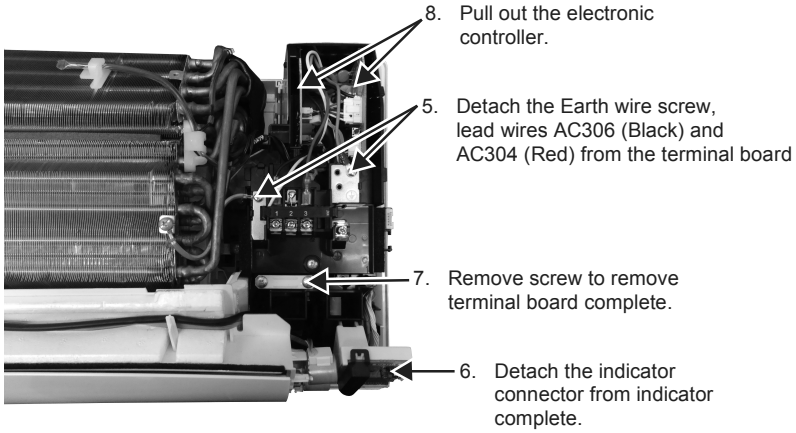

Figure 3

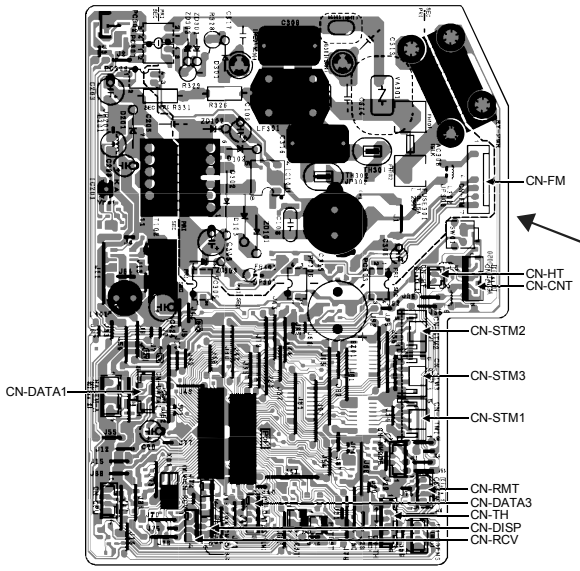

Figure 4

9. Detach all connectors from main electronic controller and sub.

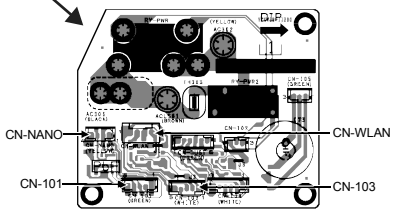

Figure 5

17.2.1.3 To Remove Discharge Grille

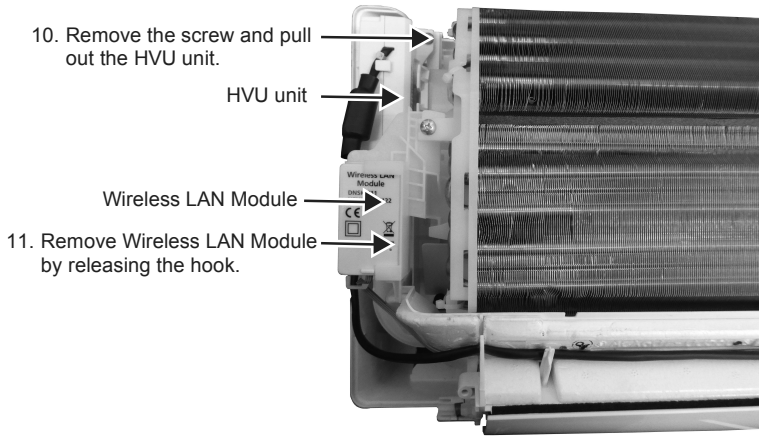

Figure 6

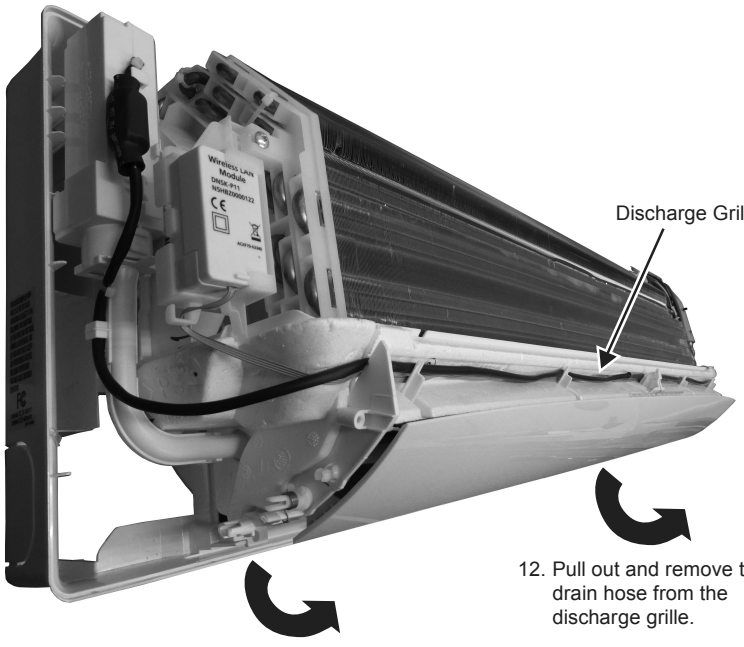

Figure 7

17.2.1.4 To Remove Control Board

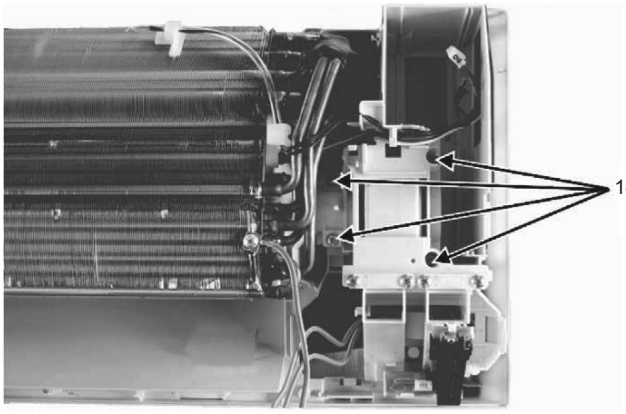

Figure 8

17.2.1.5 To Remove Cross Flow Fan and Indoor Fan Motor

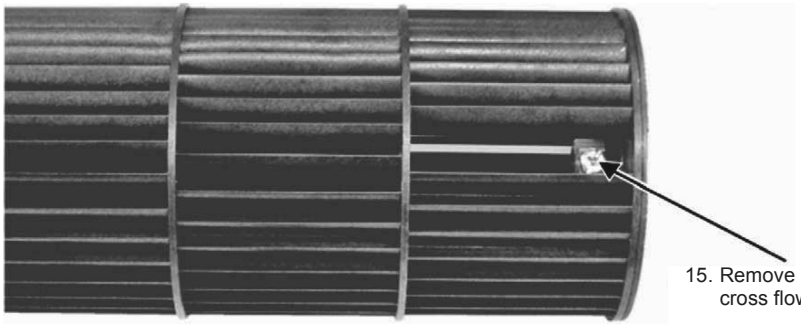

Figure 9

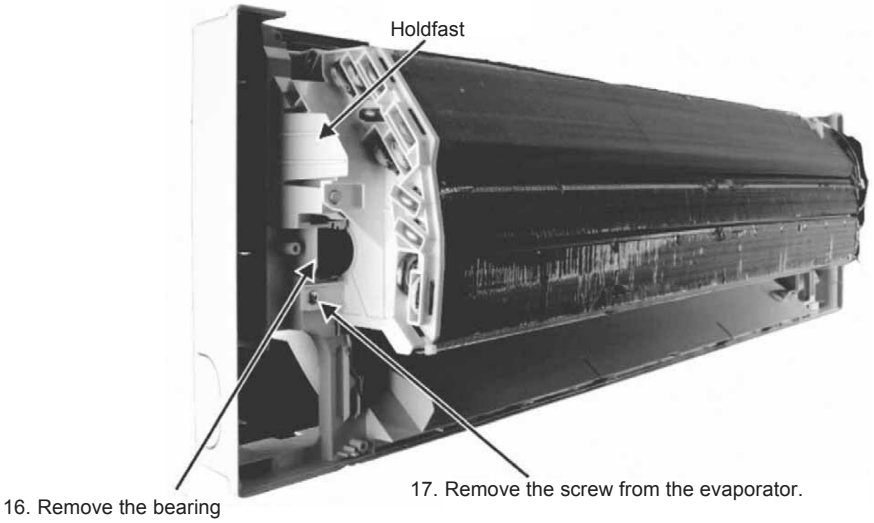

Figure 10

18. Push the holdfast to the left and lift up the evaporator.



Evaporator

19. Remove the cross flow fan from the unit by pulling it to the left and downward.

20. Fan motor can be removed after the removal of cross flow fan.

Reminder: To reinstall the fan motor, please adjust the connector to 45° with fan motor before fixing control board.

Figure 11

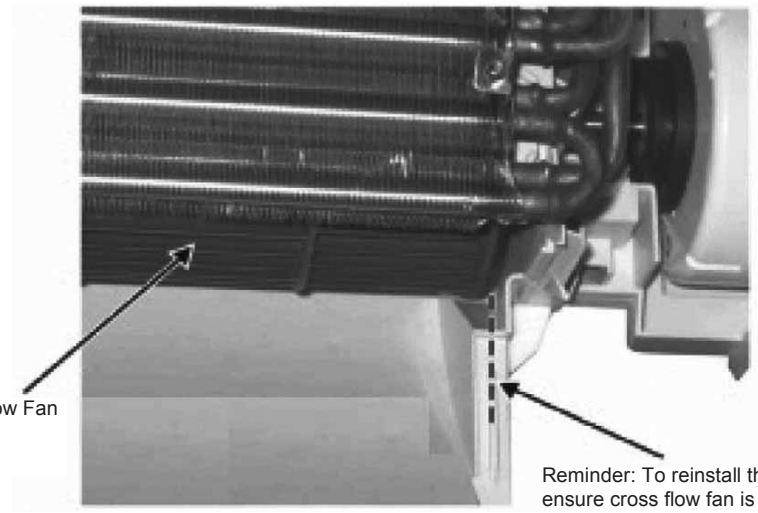

Cross Flow Fan

Reminder: To reinstall the cross flow fan, ensure cross flow fan is in line as shown in figure 12.

Figure 12

17.2.1.6 To Replace Wireless LAN Module (Network Adapter)

1 Remove the network adapter box by releasing the hook.

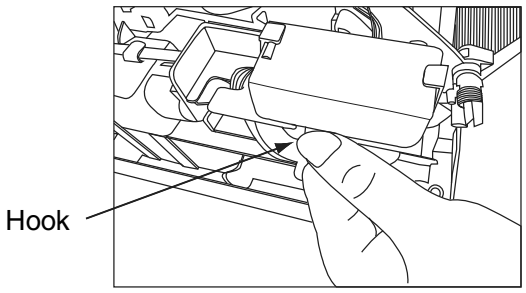

2 Remove the cover by unclipping it and pulling it out.

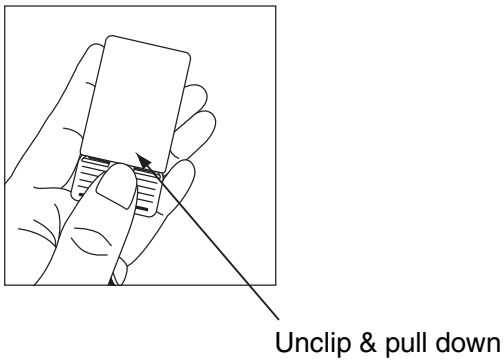

3 Remove the top casing by pressing the side of the network adapter box.

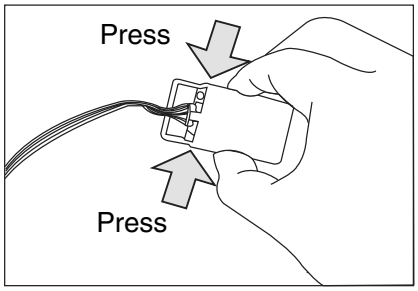

4 After that, network adapter can be easily replaced.

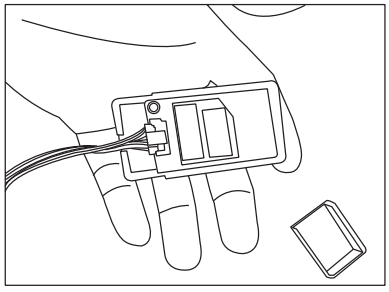

Reminder: Serviceman or owner must setting again Panasonic Comfort Cloud app after replace Wireless LAN Module.

17.3 Outdoor Electronic Controller Removal Procedure

17.3.1 CU-XE9WKUA CU-XE12WKUA

⚠ Caution! When handling electronic controller, be careful of electrostatic discharge.

1 Remove the 5 screws of the Top Panel.

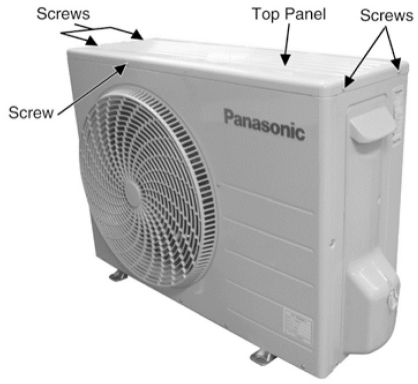

Fig. 1

2 Remove the 8 screws of the Front Panel.

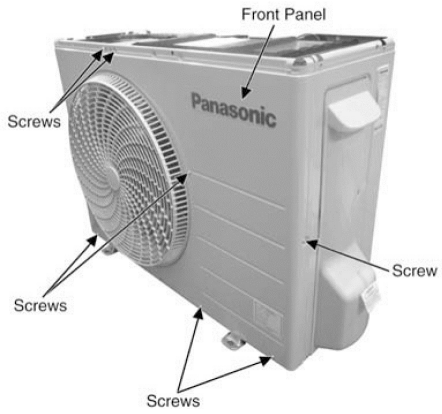

Fig. 2

3 Remove the screw of the Terminal Board Cover.

4 Remove the Top Cover of the Control Board by 4 hooks.

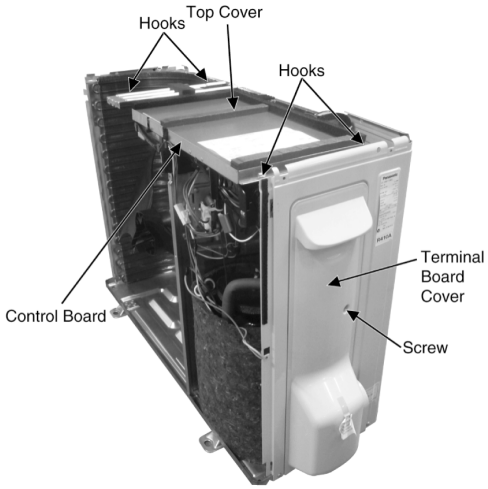

Fig. 3

5 Remove the Control Board as follows:

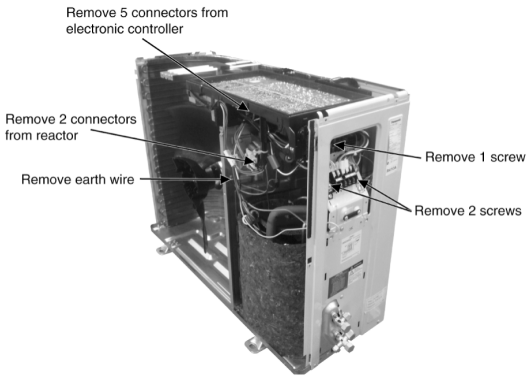

Fig. 4

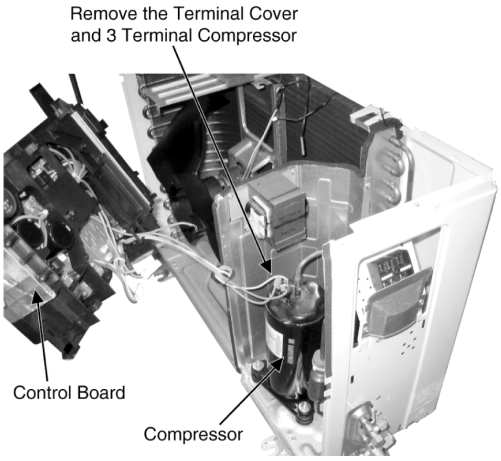

Fig. 5

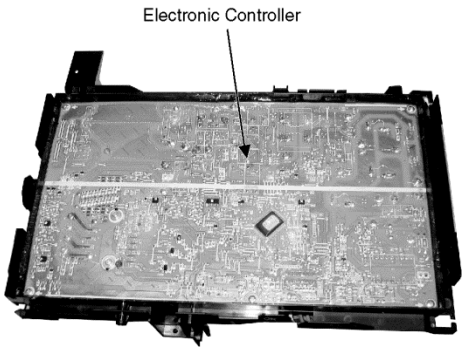

Fig. 6

17.3.2 CU-XE15WKUA

⚠ Caution! When handling electronic controller, be careful of electrostatic discharge.

1 Remove the 4 screws of the Top Panel.

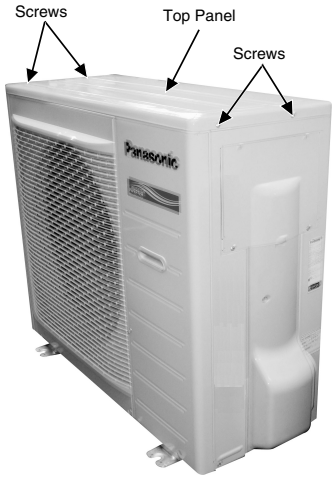

Fig.1

2 Remove the 10 screws of the Front Panel.

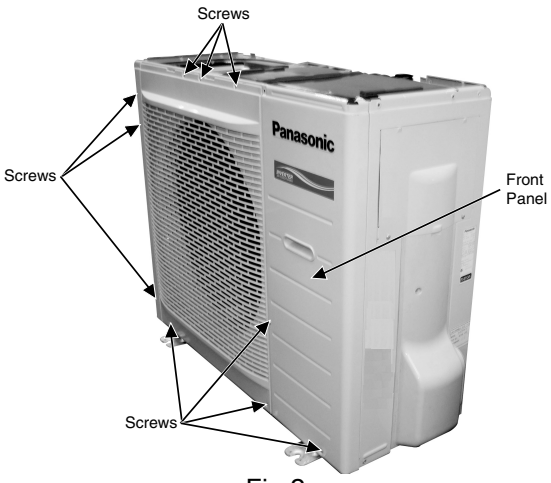

Fig.2

3 Remove the Top Cover of the Electronic Controller.



Fig.3

4 Remove the Control Board.

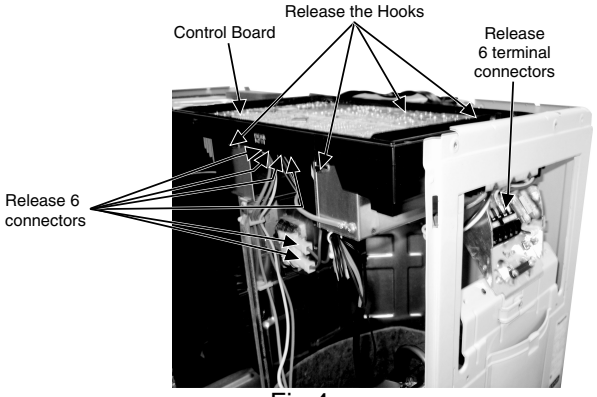

Fig.4

5 Remove the 8 screws of the Electronic Controller.

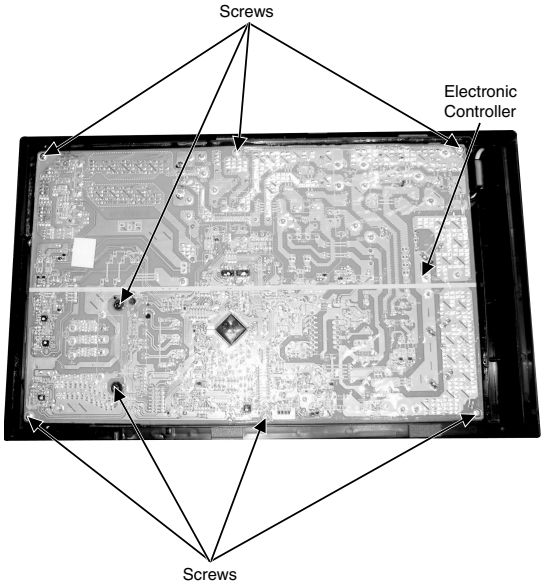

Fig.5

⚠ Caution! When handling electronic controller, be careful of electrostatic discharge.

17.3.3 CU-XE18WKUA CU-XE24WKUA

⚠ Caution! When handling electronic controller, be careful of electrostatic discharge.

1 Remove the 4 screws of the Top Panel.

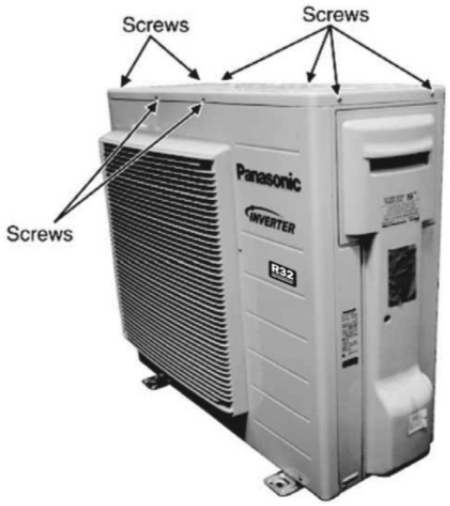

Fig.1

2 Remove the 10 screws of the Front Panel.

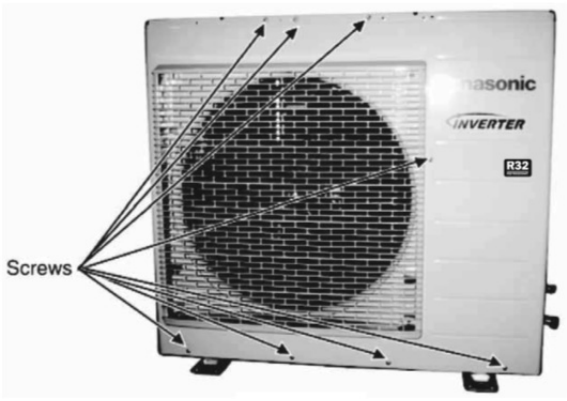

Fig.2

3 Remove the Top Cover of the Electronic Controller.

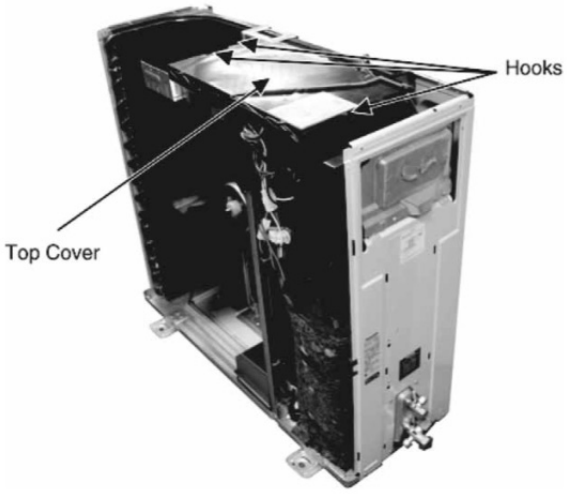

Fig.3

4 Remove the Control Board.

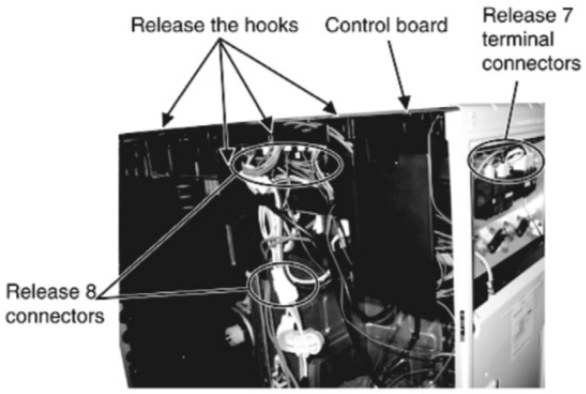

Fig.4

5 Remove the 8 screws of the Electronic Controller.

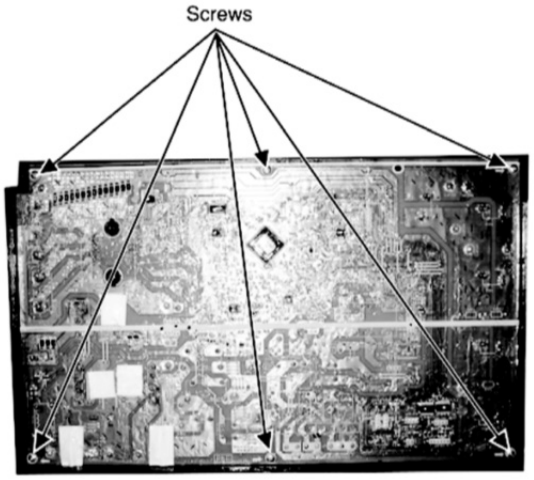

Fig.5

⚠ Caution! When handling electronic controller, be careful of electrostatic discharge.

17.4 To Set Panasonic Comfort Cloud App. After Replace Main Printed Circuit Board and Wireless LAN Module

17.4.1 'Panasonic Comfort Cloud' App Setting Procedure [After Replace Main Printed Circuit Board]

17.4.1.1 Initial Setup

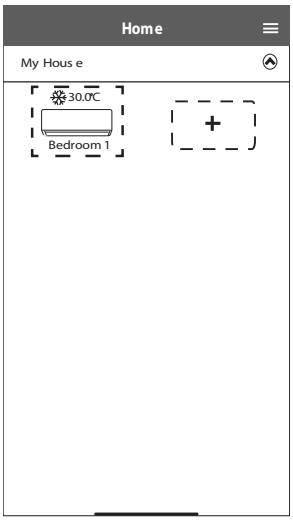

1. Select air-conditioner.

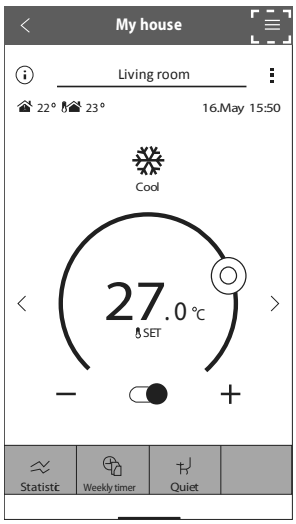

2. Select 'Menu'.

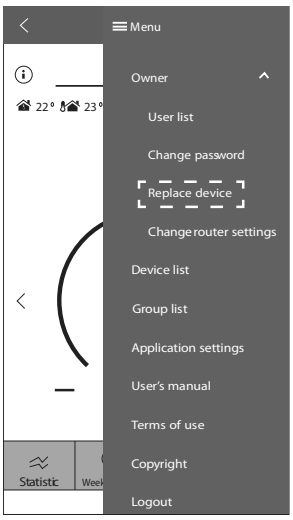

3. Select 'Replace device'.

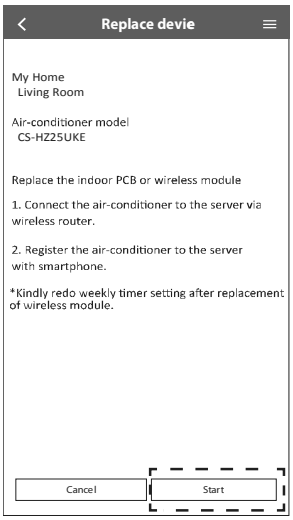

4. Select start button to proceed for network setting.

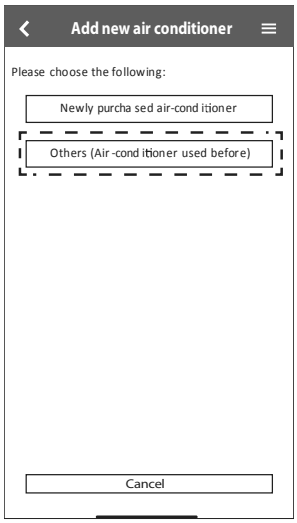

5. Select 'Others (Air-Conditioner used before)'

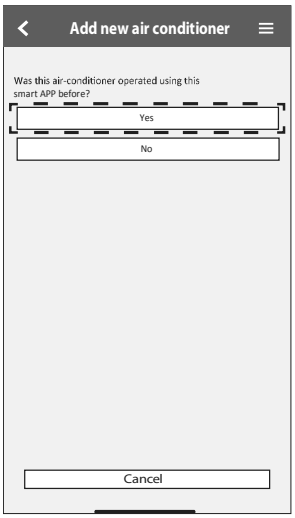

6. Select 'Yes'.

17.4.1.2 Setting Connection Network



1. Ensure Wireless LAN LED is ON.
   point the remote control to air conditioner and press Wireless LAN button until the Wireless LAN LED changed to blinking.

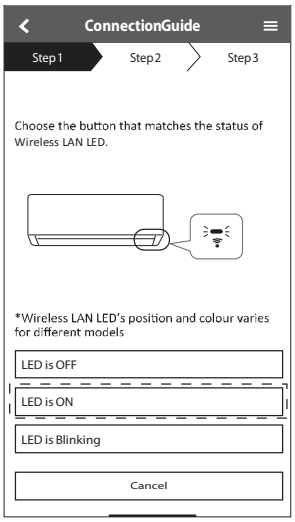

2. When Wireless LAN LED is blinking, select preferred connection setup mode.

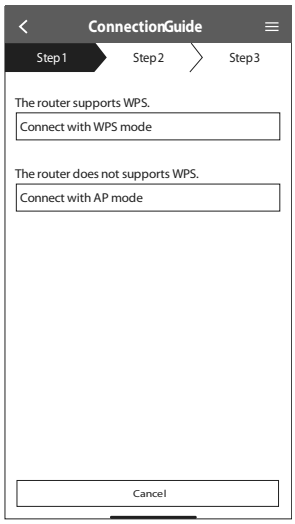

3. Select the preferred router support connectivity mode.

17.4.1.3 Connection Network Using WPS Mode (Method 1)

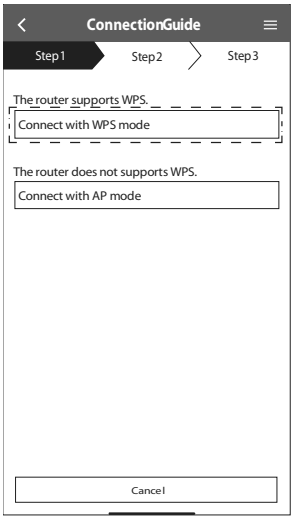

1. Select 'Connect with WPS mode'.

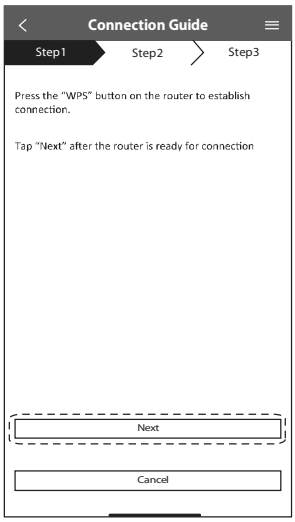

2. Press the "WPS" button from the router that will be connected to an air conditioner.
   - Check the status of Wireless LAN LED on the remote control. If the Wireless LAN LED is OFF, press the Wireless LAN button to enable the Wireless LAN connection.

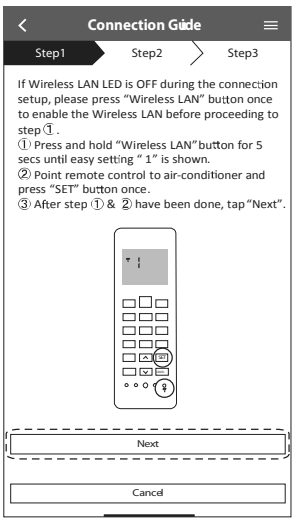

3. Ensure Wireless LAN LED is ON. Press and hold the Wireless LAN button for 5 seconds until "1" is shown on the remote control and press SET pointing to the air conditioner.

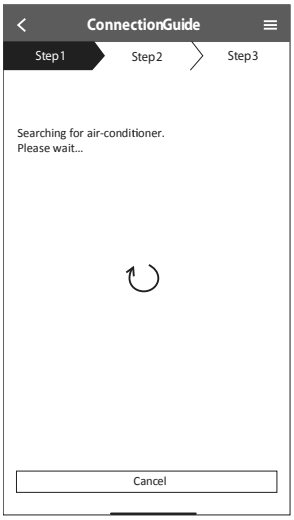

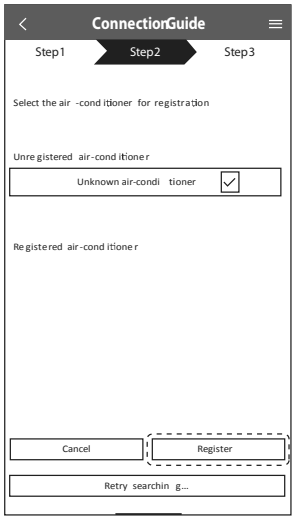

4. If the Wireless LAN LED keep blinking, check the wireless router connection.

5. Select the air conditioner model to register the device.

17.4.1.4 Connection Network Using AP Mode (Method 2)

* (For Android 4.4 and above & iOS 11 and above only)

① Ensure Wireless LAN LED is ON. Press and hold the Wireless LAN button for 5 seconds until “1” is shown on the remote control.
Press until “2” is shown on the remote control and press SET pointing to the air conditioner. Join to connect “Panasonic-CS-wirelessAP” network.

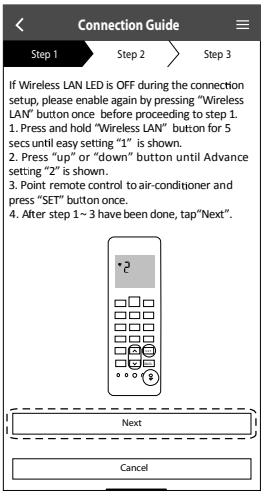

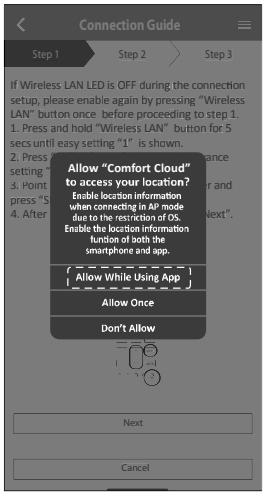

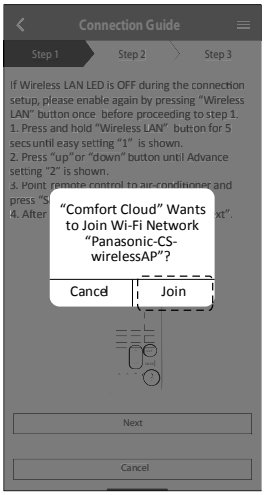

② Enter the password of the selected wireless router and continue.

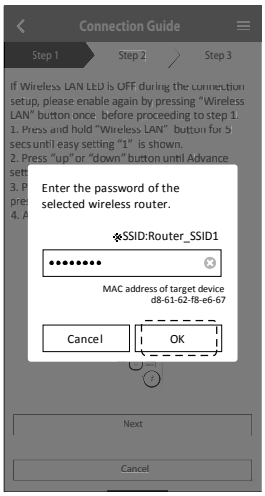

③ When connection of air conditioner to router is successful, the Wireless LAN LED will changed from blinking to ON. If the Wireless LAN LED is ON, connect the smartphone to wireless router. (return to this application after completing the wireless network settings to continue the setup)
• If the Wireless LAN LED keep blinking, check the wireless router connection.

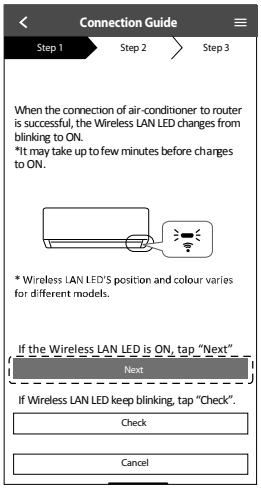

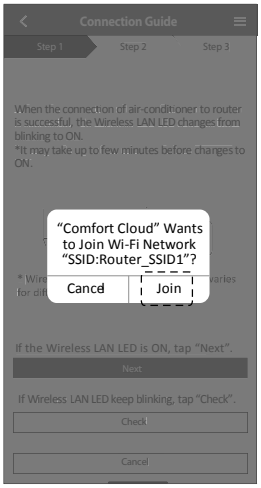

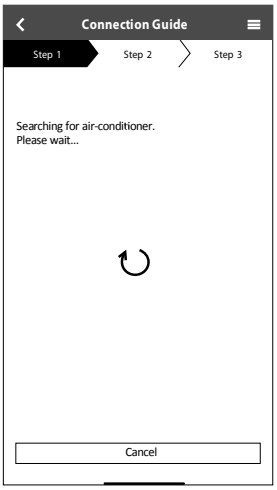

17.4.1.5 Select the Air-Conditioner and Set the Password

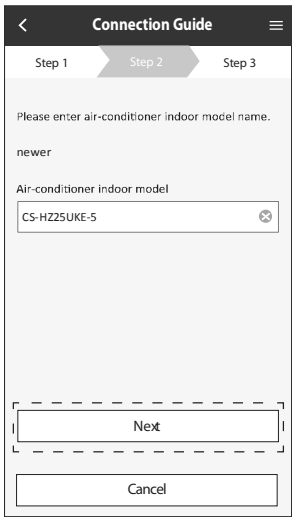

1. Select the air-conditioner model to register the device.

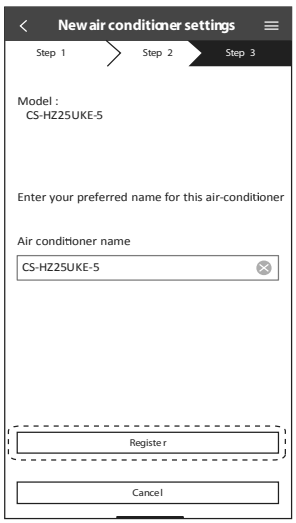

2. Once connection is establish between the app and the new air-conditioner through the registration process, set the preferred name for this air-conditioner to helps identify it.
   - By registered the new name of air conditioner, the function of “Panasonic Comfort Cloud” app is ready to be used.

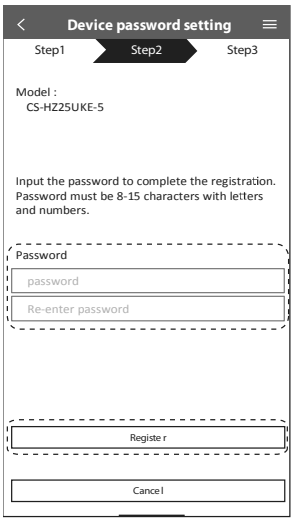

3. Password must be 8-15 characters with letters and number.
   Note
   Keep password for future used on additional user registration.

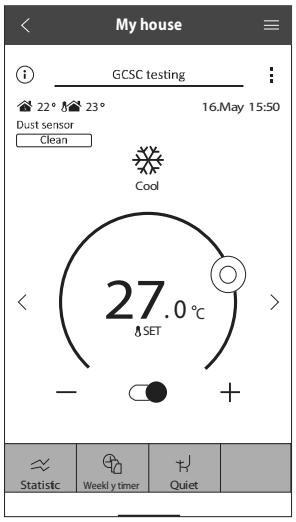

By registered the new name of air

4. Setting completed.

17.4.2 'Panasonic Comfort Cloud' App Setting Procedure [After Replace Wireless LAN Module]

17.4.2.1 Initial Setup (Method 1)

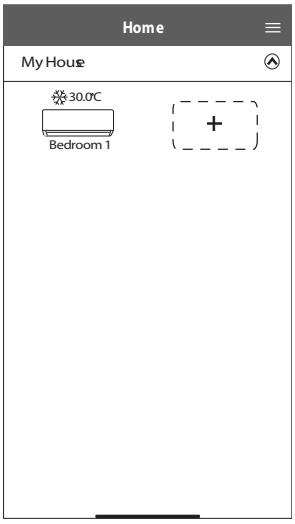

1. Select model.

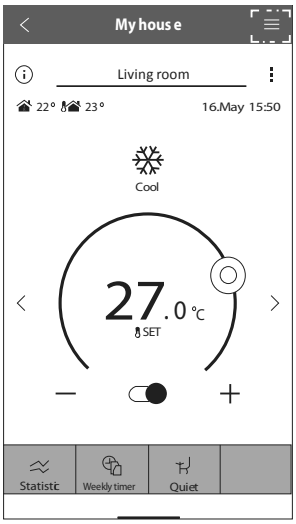

2. Select 'Menu'.

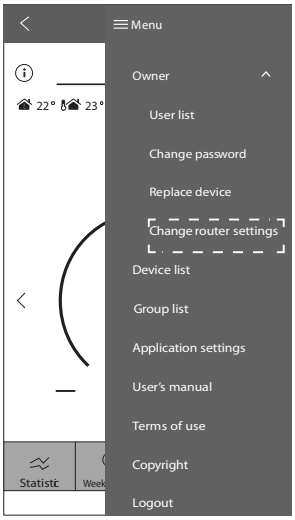

3. Select 'Change router setting'.

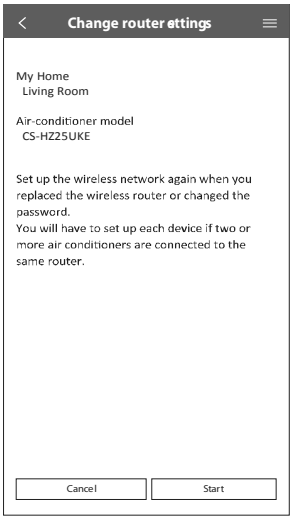

4. Select start button to proceed for network setting.

17.4.2.2 Initial Setup (Method 2)

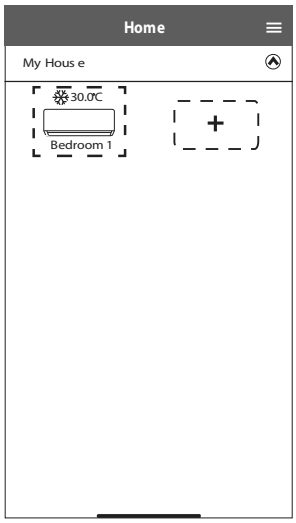

1. Select air-conditioner.

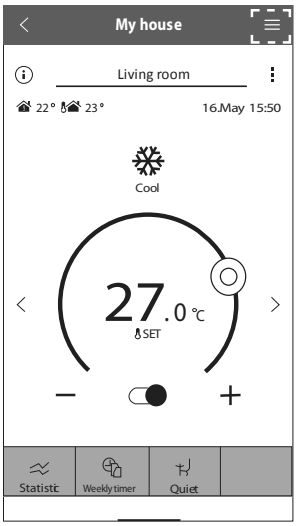

2. Select ‘Menu’.

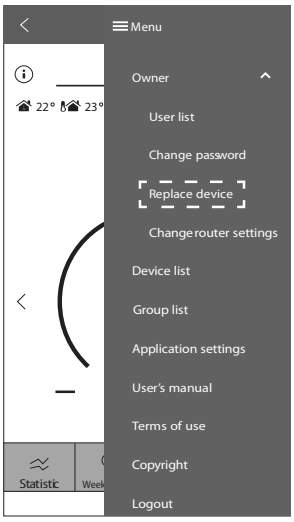

3. Select ‘Replace device’.

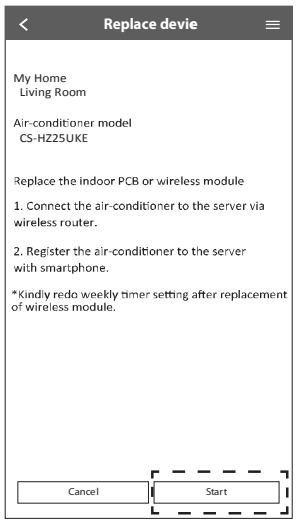

4. Select start button to proceed for network setting.

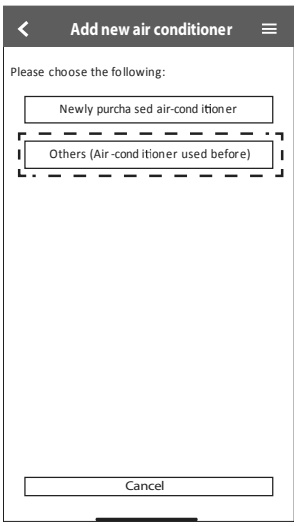

5. Select ‘Others (Air-Conditioner used before)’

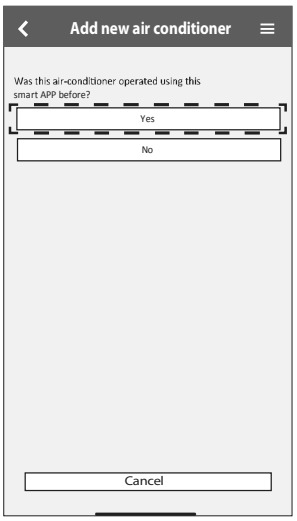

6. Select ‘Yes’.

17.4.2.3 Setting Connection Network



1. Ensure Wireless LAN LED is ON.
   point the remote control to air conditioner and press Wireless LAN button until the Wireless LAN LED changed to blinking.

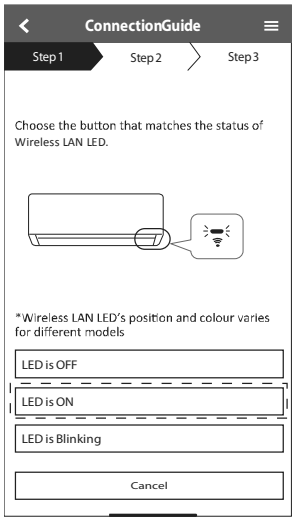

2. When Wireless LAN LED is blinking, select preferred connection setup mode.

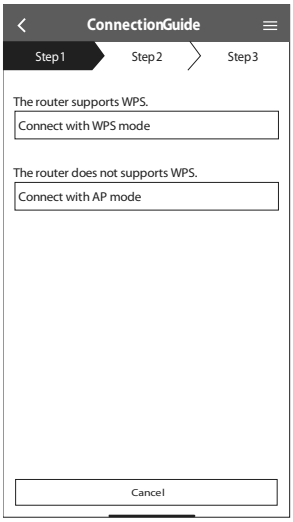

3. Select the preferred router support connectivity mode.

17.4.2.4 Connection Network Using WPS Mode (Method 1)

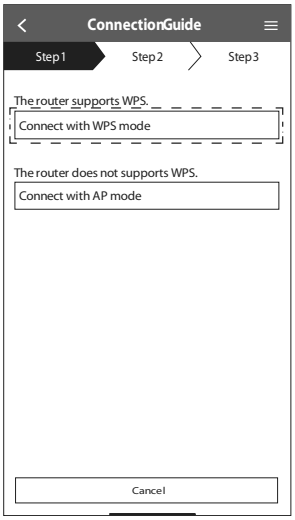

1. Select 'Connect with WPS mode'.



2. Press the "WPS" button from the router that will be connected to an air conditioner.
   - Check the status of Wireless LAN LED on the remote control. If the Wireless LAN LED is OFF, press the Wireless LAN button to enable the Wireless LAN connection.

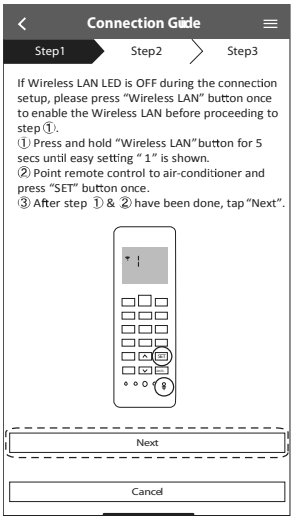

3. Ensure Wireless LAN LED is ON. Press and hold the Wireless LAN button for 5 seconds until "1" is shown on the remote control and press SET pointing to the air conditioner.

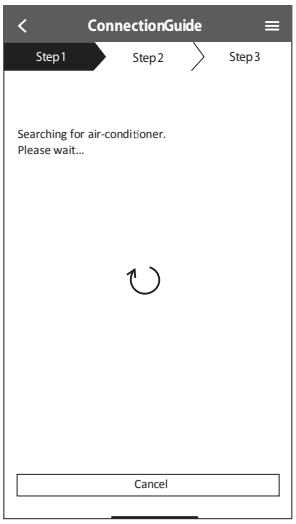

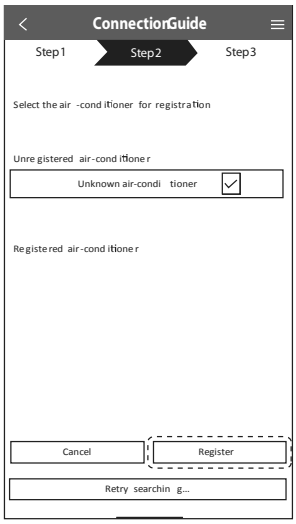

4. If the Wireless LAN LED keep blinking, check the wireless router connection.

5. Select the air conditioner model to register the device.

17.4.2.5 Connection Network Using AP Mode (Method 2)

* (For Android 4.4 and above & iOS 11 and above only)

① Ensure Wireless LAN LED is ON. Press and hold the Wireless LAN button for 5 seconds until "1" is shown on the remote control.
Press until "2" is shown on the remote control and press SET pointing to the air conditioner. Join to connect "Panasonic-CS-wirelessAP" network.

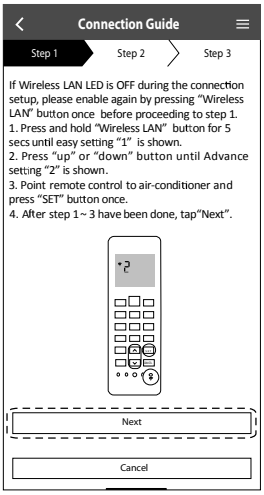

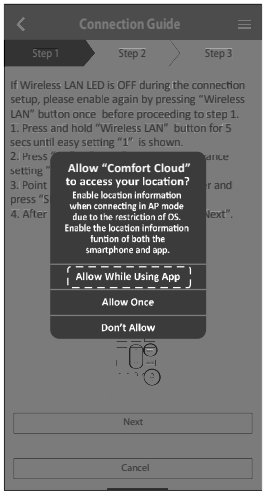

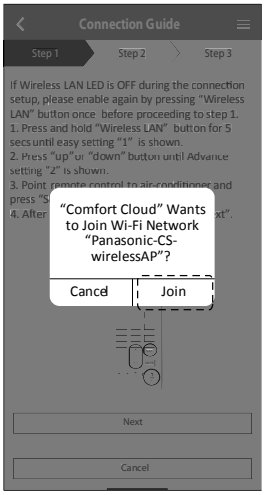

② Enter the password of the selected wireless router and continue.

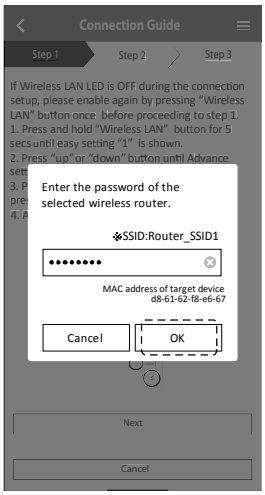

③ When connection of air conditioner to router is successful, the Wireless LAN LED will changed from blinking to ON. If the Wireless LAN LED is ON, connect the smartphone to wireless router. (return to this application after completing the wireless network settings to continue the setup)
• If the Wireless LAN LED keep blinking, check the wireless router connection.

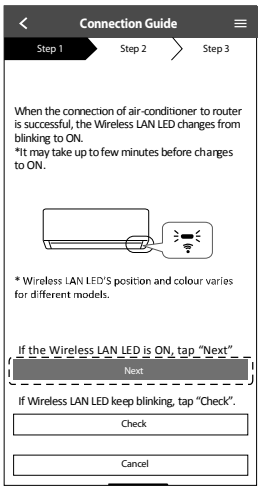

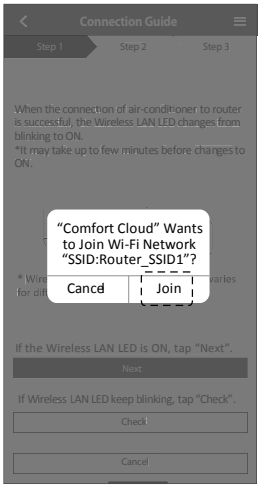

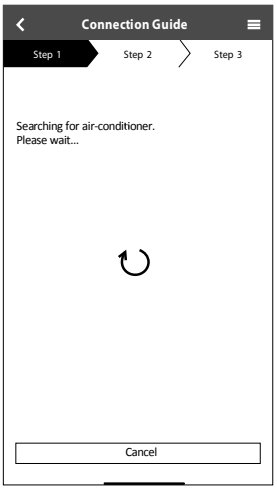

17.4.2.6 Select the Air Conditioner and Set the Password

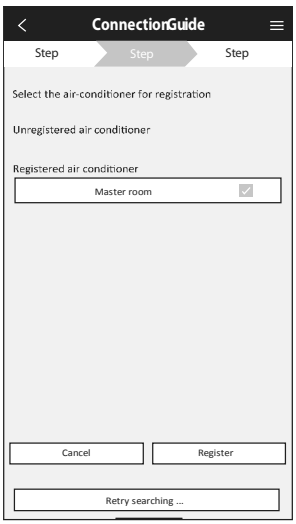

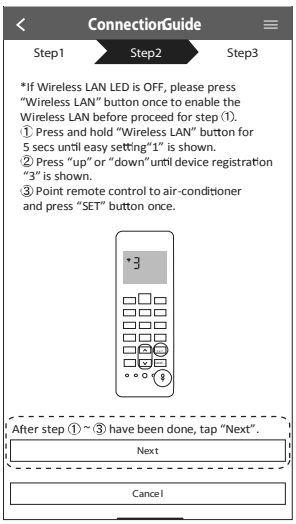

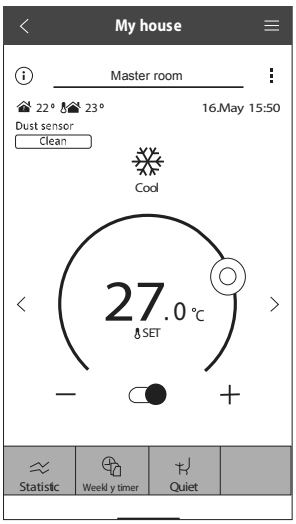

1. Select the air conditioner model to register the device.
2. Set a password for new air conditioner model to complete the registration.
3. Setting completed.

18. Technical Data

Technical data provided are based on the air conditioner running under free frequency.

18.1 Cool Mode Performance Data

Unit setting: Standard piping length, Hi Fan, Cool mode at 16°C (60.8°F)
Voltage: 208V/230V

18.1.1 CS-XE9WKUAW CU-XE9WKUA

Rated frequency (compressor speed is fixed during forced heating or cooling for capacity measurement and diagnosis purpose)

Indoor (°C / °F)		Outdoor (°C / °F)											
DB	WB	-20 (-4.0)			-10 (14.0)			0 (32.0)			5 (41.0)		
		TC	SHC	IP	TC	SHC	IP	TC	SHC	IP	TC	SHC	IP
27 (80.6)	19 (66.2)	10729	9707	389	10719	9697	384	10705	9818	372	10676	9791	369
	22 (71.6)	11337	6900	413	11326	6893	408	11437	7019	382	12063	7285	299
23 (73.4)	16 (60.8)	10041	9940	371	10031	9930	366	9729	9632	390	10767	10660	329
	18 (64.4)	10561	6874	381	10551	6867	376	10255	6774	392	10585	6964	347
20 (68.0)	13 (55.4)	9541	9445	402	9531	9436	397	9225	9133	404	8260	8177	291
	16 (60.8)	9832	2002	409	2876	2000	404	2876	2000	388	2876	2000	276

Indoor (°C / °F)		Outdoor (°C / °F)											
DB	WB	16 (60.8)			25 (77.0)			35 (95.0)			46 (114.8)		
		TC	SHC	IP	TC	SHC	IP	TC	SHC	IP	TC	SHC	IP
27 (80.6)	19 (66.2)	10634	9136	364	9305	8337	496	8708	8273	540	5977	5355	485
	22 (71.6)	10982	6530	362	10156	5855	474	9271	5744	531	6234	3594	191
23 (73.4)	16 (60.8)	9431	9337	408	8429	8344	509	8025	7945	547	5174	5122	205
	18 (64.4)	9975	6464	393	9262	5903	495	8232	5929	540	5685	3623	200
20 (68.0)	13 (55.4)	6989	6919	180	6862	6794	385	7374	7300	549	3998	3958	155
	16 (60.8)	2876	2000	347	2876	2000	507	2876	2000	544	2876	2000	204

18.1.2 CS-XE12WKUAW CU-XE12WKUA

Rated frequency (compressor speed is fixed during forced heating or cooling for capacity measurement and diagnosis purpose)

Indoor (°C / °F)		Outdoor (°C / °F)											
DB	WB	-20 (-4.0)			-10 (14.0)			0 (32.0)			5 (41.0)		
		TC	SHC	IP	TC	SHC	IP	TC	SHC	IP	TC	SHC	IP
27 (80.6)	19 (66.2)	13182	11926	600	14123	12777	576	14106	12937	559	14067	12902	554
	22 (71.6)	14938	9092	619	14924	9083	600	15070	9248	573	15060	9094	570
23 (73.4)	16 (60.8)	12888	12759	556	12875	12746	550	12820	12691	585	12806	12678	600
	18 (64.4)	13916	9058	571	13902	9049	564	14258	9418	588	14514	9549	620
20 (68.0)	13 (55.4)	11788	11670	602	11781	11663	595	11728	11611	605	10883	10775	630
	16 (60.8)	2876	2000	614	2876	2000	606	2876	2000	615	2876	2000	647

Indoor (°C / °F)		Outdoor (°C / °F)											
DB	WB	16 (60.8)			25 (77.0)			35 (95.0)			46 (114.8)		
		TC	SHC	IP	TC	SHC	IP	TC	SHC	IP	TC	SHC	IP
27 (80.6)	19 (66.2)	14012	12038	546	12261	10985	744	11474	10901	810	9518	8527	981
	22 (71.6)	14470	8604	543	13381	7714	753	12216	7569	840	11027	6357	986
23 (73.4)	16 (60.8)	12427	12302	611	11106	10995	763	10574	10468	821	8333	8249	964
	18 (64.4)	13144	8518	640	12204	7778	743	10846	7812	810	9241	5889	974
20 (68.0)	13 (55.4)	9209	9117	665	9042	8952	577	9717	9619	824	7800	7722	949
	16 (60.8)	2876	2000	689	2876	2000	760	2876	2000	816	2876	2000	960

18.1.3 CS-XE15WKUAW CU-XE15WKUA

Rated frequency (compressor speed is fixed during forced heating or cooling for capacity measurement and diagnosis purpose)

Indoor (°C / °F)		Outdoor (°C / °F)											
DB	WB	-20 (-4.0)			-10 (14.0)			0 (32.0)			5 (41.0)		
		TC	SHC	IP	TC	SHC	IP	TC	SHC	IP	TC	SHC	IP
27 (80.6)	19 (66.2)	18093	15640	842	18074	15624	832	18052	15905	807	18002	15553	800
	22 (71.6)	20754	12784	736	20734	12771	727	19764	12493	842	18435	11714	840
23 (73.4)	16 (60.8)	15922	15763	929	15906	15747	917	16910	16741	764	16121	15959	847
	18 (64.4)	17800	12032	850	17782	12020	840	19813	12962	665	18460	11342	884
20 (68.0)	13 (55.4)	14016	13876	921	14002	13862	910	13912	13773	605	13409	13275	723
	16 (60.8)	2876	2000	1064	2876	2000	1051	2876	2000	629	2876	2000	620

Indoor (°C / °F)		Outdoor (°C / °F)											
DB	WB	16 (60.8)			25 (77.0)			35 (95.0)			46 (114.8)		
		TC	SHC	IP	TC	SHC	IP	TC	SHC	IP	TC	SHC	IP
27 (80.6)	19 (66.2)	17932	15756	789	15692	14009	1075	14685	13950	1170	12049	12768	1405
	22 (71.6)	18551	12532	791	17063	11087	1087	16204	8715	1185	13150	8966	1343
23 (73.4)	16 (60.8)	16627	16461	789	14518	14373	1055	13438	13303	1235	10914	10805	1441
	18 (64.4)	18148	11972	791	15959	10670	1066	14793	10349	1258	11993	9040	1402
20 (68.0)	13 (55.4)	14536	14390	660	13598	13462	1054	12391	12267	1214	8434	8349	1089
	16 (60.8)	2876	2000	1070	2876	2000	1353	2876	2000	1322	2876	2000	1436

18.1.4 CS-XE18WKUAW CU-XE18WKUA

Rated frequency (compressor speed is fixed during forced heating or cooling for capacity measurement and diagnosis purpose)

Indoor (°C / °F)		Outdoor (°C / °F)											
DB	WB	-20 (-4.0)			-10 (14.0)			0 (32.0)			5 (41.0)		
		TC	SHC	IP	TC	SHC	IP	TC	SHC	IP	TC	SHC	IP
27 (80.6)	19 (66.2)	29537	24458	1691	29508	24434	1670	29471	24872	1621	29389	24322	1606
	22 (71.6)	33883	19992	1477	33849	19972	1459	32267	19537	1692	30096	18318	1688
23 (73.4)	16 (60.8)	25994	25734	1866	25968	25708	1843	27606	27330	1534	26318	26055	1701
	18 (64.4)	29060	18816	1708	29031	18797	1687	32347	20269	1335	30137	18794	1775
20 (68.0)	13 (55.4)	22882	22653	1851	22859	22631	1828	22712	22485	1214	21891	21672	1451
	16 (60.8)	2876	2000	2137	2876	2000	2111	2876	2000	1263	2876	2000	1246

Indoor (°C / °F)		Outdoor (°C / °F)											
DB	WB	16 (60.8)			25 (77.0)			35 (95.0)			46 (114.8)		
		TC	SHC	IP	TC	SHC	IP	TC	SHC	IP	TC	SHC	IP
27 (80.6)	19 (66.2)	29275	24639	1584	25617	21907	2159	23973	21816	2350	16455	14974	2113
	22 (71.6)	30286	18798	1589	27857	17337	2183	26454	13628	2381	18158	9354	2140
23 (73.4)	16 (60.8)	27145	26874	1584	23702	23465	2119	21938	21719	2481	15058	14908	2231
	18 (64.4)	29627	18723	1588	26054	16686	2141	24151	16184	2527	16577	11108	2272
20 (68.0)	13 (55.4)	23731	23493	1326	22199	21977	2117	20229	20027	2438	13885	13746	2192
	16 (60.8)	2876	2000	2149	2876	2000	2717	2876	2000	2655	2876	2000	2387

18.1.5 CS-XE24WKUAW CU-XE24WKUA

Rated frequency (compressor speed is fixed during forced heating or cooling for capacity measurement and diagnosis purpose)

Indoor (°C / °F)		Outdoor (°C / °F)											
DB	WB	-20 (-4.0)			-10 (14.0)			0 (32.0)			5 (41.0)		
		TC	SHC	IP	TC	SHC	IP	TC	SHC	IP	TC	SHC	IP
27 (80.6)	19 (66.2)	29537	24727	1583	29508	24702	1564	29471	25145	1517	29389	24589	1504
	22 (71.6)	33883	20211	1383	33849	20191	1366	32267	19752	1584	30096	18519	1580
23 (73.4)	16 (60.8)	25994	25734	1746	25968	25708	1725	27606	27330	1436	26318	26055	1592
	18 (64.4)	29060	19023	1599	29031	19004	1579	32347	21043	1250	30137	17932	1662
20 (68.0)	13 (55.4)	22882	22653	1733	22859	22631	1711	22712	22485	1137	21891	21672	1359
	16 (60.8)	2876	2000	2000	2876	2000	1976	2876	2000	1182	2876	2000	1167

Indoor (°C / °F)		Outdoor (°C / °F)											
DB	WB	16 (60.8)			25 (77.0)			35 (95.0)			46 (114.8)		
		TC	SHC	IP	TC	SHC	IP	TC	SHC	IP	TC	SHC	IP
27 (80.6)	19 (66.2)	29275	24910	1483	25617	22148	2022	23973	22055	2200	16455	15139	1978
	22 (71.6)	30286	19813	1488	27857	17528	2044	26454	13778	2229	18158	9457	2004
23 (73.4)	16 (60.8)	27145	26874	1483	23702	23465	1983	21938	21719	2323	15058	14908	2088
	18 (64.4)	29627	18928	1487	26054	16870	2005	24151	16362	2365	16577	11231	2127
20 (68.0)	13 (55.4)	23731	23493	1241	22199	21977	1982	20229	20027	2282	13885	13746	2052
	16 (60.8)	2876	2000	2012	2876	2000	2544	2876	2000	2486	2876	2000	2235

18.1.6 CS-XE9WKUAW CU-XE9WKUA

Maximum Capacity

Indoor (°C / °F)		Outdoor (°C / °F)											
DB	WB	-20 (-4.0)			-10 (14.0)			0 (32.0)			5 (41.0)		
		TC	SHC	IP	TC	SHC	IP	TC	SHC	IP	TC	SHC	IP
27 (80.6)	19 (66.2)	14769	13361	612	14754	13348	604	14735	13514	586	14695	13478	581
	22 (71.6)	15605	9498	650	15590	9488	642	15743	9661	601	16605	10027	471
23 (73.4)	16 (60.8)	13821	13682	584	13807	13669	577	13392	13258	614	14821	14673	517
	18 (64.4)	14537	9462	599	14523	9453	592	14116	9324	617	14570	9586	546
20 (68.0)	13 (55.4)	13132	13001	632	13119	12988	624	12698	12571	637	11369	11256	458
	16 (60.8)	13533	9408	644	13520	9399	636	13605	9364	611	11967	8630	434

Indoor (°C / °F)		Outdoor (°C / °F)											
DB	WB	16 (60.8)			25 (77.0)			35 (95.0)			46 (114.8)		
		TC	SHC	IP	TC	SHC	IP	TC	SHC	IP	TC	SHC	IP
27 (80.6)	19 (66.2)	14637	14104	573	12809	11796	781	11987	11387	850	8228	7371	764
	22 (71.6)	15116	9993	570	13979	8272	747	12762	7906	835	8580	4946	301
23 (73.4)	16 (60.8)	12981	14046	642	11602	11836	801	11046	10936	861	7121	7050	323
	18 (64.4)	13731	8047	619	12749	8125	779	11331	8161	850	7825	4987	314
20 (68.0)	13 (55.4)	9620	10740	284	9446	10110	605	10150	10299	864	5503	5448	244
	16 (60.8)	11030	8709	546	11355	8506	798	10316	8018	856	6970	4880	322

18.1.7 CS-XE12WKUAW CU-XE12WKUA

Maximum Capacity

Indoor (°C / °F)		Outdoor (°C / °F)											
DB	WB	-20 (-4.0)			-10 (14.0)			0 (32.0)			5 (41.0)		
		TC	SHC	IP	TC	SHC	IP	TC	SHC	IP	TC	SHC	IP
27 (80.6)	19 (66.2)	15146	13703	655	15136	13693	649	15123	13870	630	15078	13829	626
	22 (71.6)	17383	10580	670	17381	10579	660	16560	10163	656	16221	9795	678
23 (73.4)	16 (60.8)	13732	13594	728	13933	13794	717	14180	14038	680	14343	14200	750
	18 (64.4)	14940	9724	745	14931	9718	730	15128	9993	732	15496	10195	772
20 (68.0)	13 (55.4)	12571	12445	727	12558	12433	716	12155	12034	720	12243	11724	734
	16 (60.8)	12955	9006	833	12942	8997	835	13023	8964	821	13322	9308	845

Indoor (°C / °F)		Outdoor (°C / °F)											
DB	WB	16 (60.8)			25 (77.0)			35 (95.0)			46 (114.8)		
		TC	SHC	IP	TC	SHC	IP	TC	SHC	IP	TC	SHC	IP
27 (80.6)	19 (66.2)	15020	12904	614	14455	13582	981	14002	13301	1050	12183	10914	1099
	22 (71.6)	15578	9465	625	15566	8974	1010	15451	9572	1064	14115	8137	1104
23 (73.4)	16 (60.8)	14023	14023	800	13391	13257	938	12813	12685	1109	11679	11563	1123
	18 (64.4)	15263	10137	820	14325	9130	951	14105	10159	1129	12151	7744	1190
20 (68.0)	13 (55.4)	12288	12288	760	12118	11997	926	11815	11697	1089	10986	10876	1120
	16 (60.8)	15013	10984	880	14449	10116	1158	13198	10021	1186	11618	8134	1220

18.1.8 CS-XE15WKUAW CU-XE15WKUA

Maximum Capacity

Indoor (°C / °F)		Outdoor (°C / °F)											
DB	WB	-20 (-4.0)			-10 (14.0)			0 (32.0)			5 (41.0)		
		TC	SHC	IP	TC	SHC	IP	TC	SHC	IP	TC	SHC	IP
27 (80.6)	19 (66.2)	18513	16004	863	18495	15988	853	18472	16275	873	18421	15914	895
	22 (71.6)	21237	13081	754	21216	13068	745	20224	12784	864	18864	11986	862
23 (73.4)	16 (60.8)	16292	16129	953	16276	16113	941	17303	17130	783	16496	16331	868
	18 (64.4)	18214	12312	872	18196	12299	861	20274	13263	682	18889	11606	907
20 (68.0)	13 (55.4)	14342	14199	945	14328	14184	933	14235	14093	620	13721	13584	741
	16 (60.8)	14305	10853	1091	14291	10842	1078	14975	11208	645	16188	11967	636

Indoor (°C / °F)		Outdoor (°C / °F)											
DB	WB	16 (60.8)			25 (77.0)			35 (95.0)			46 (114.8)		
		TC	SHC	IP	TC	SHC	IP	TC	SHC	IP	TC	SHC	IP
27 (80.6)	19 (66.2)	18349	16122	1000	18677	17720	1486	19022	18070	1900	15608	16538	1963
	22 (71.6)	21293	14306	1154	21619	14047	1680	20990	11289	1925	17034	11614	1876
23 (73.4)	16 (60.8)	18513	18444	1122	18143	17961	1613	17407	17233	2006	14137	13996	2013
	18 (64.4)	20756	13693	1094	19553	13073	1592	19163	13405	2043	15535	11710	1959
20 (68.0)	13 (55.4)	16582	16416	932	16381	16217	1545	16051	15890	1971	10925	10815	1832
	16 (60.8)	19848	13988	1591	19630	13986	1997	17929	7446	2147	13836	11458	2005

18.1.9 CS-XE18WKUAW CU-XE18WKUA

Maximum Capacity

Indoor (°C / °F)		Outdoor (°C / °F)											
DB	WB	-20 (-4.0)			-10 (14.0)			0 (32.0)			5 (41.0)		
		TC	SHC	IP	TC	SHC	IP	TC	SHC	IP	TC	SHC	IP
27 (80.6)	19 (66.2)	29553	25009	1698	29533	24992	1681	29509	25452	1631	29420	24882	1621
	22 (71.6)	33918	20452	1510	33914	20450	1511	32313	19995	1699	30574	19018	1756
23 (73.4)	16 (60.8)	26063	25803	1886	26036	25776	1858	27668	27392	1559	26716	26448	1721
	18 (64.4)	29150	19289	1721	29133	19278	1721	31705	20304	1374	30236	18187	1801
20 (68.0)	13 (55.4)	23000	22770	1883	22986	22757	1856	22884	22655	1264	22136	21915	1498
	16 (60.8)	22884	16996	2158	22918	17021	2164	24124	17674	1301	25995	18812	1358

Indoor (°C / °F)		Outdoor (°C / °F)											
DB	WB	16 (60.8)			25 (77.0)			35 (95.0)			46 (114.8)		
		TC	SHC	IP	TC	SHC	IP	TC	SHC	IP	TC	SHC	IP
27 (80.6)	19 (66.2)	29308	25209	1591	28204	24650	2541	27320	25408	2720	16471	15318	2126
	22 (71.6)	30397	20102	1618	30373	19319	2481	30147	15872	2756	18216	9590	2180
23 (73.4)	16 (60.8)	27361	27087	1654	26128	25867	2431	25001	24751	2872	15217	15065	2275
	18 (64.4)	29782	19234	1611	27952	18295	2464	27523	18848	2924	16918	11586	2321
20 (68.0)	13 (55.4)	23977	23737	1336	23645	23409	2400	23053	22823	2822	14073	13932	2212
	16 (60.8)	29293	23084	2451	28194	19664	3000	25751	10469	3074	15566	6328	2421

18.1.10 CS-XE24WKUAW CU-XE24WKUA

Maximum Capacity

Indoor (°C / °F)		Outdoor (°C / °F)											
DB	WB	-20 (-4.0)			-10 (14.0)			0 (32.0)			5 (41.0)		
		TC	SHC	IP	TC	SHC	IP	TC	SHC	IP	TC	SHC	IP
27 (80.6)	19 (66.2)	33661	27566	1813	33627	27538	1791	33585	28033	1738	33492	27412	1722
	22 (71.6)	38613	22532	1584	38574	22510	1565	36771	22020	1815	34298	20646	1810
23 (73.4)	16 (60.8)	29622	29326	2000	29593	29297	1976	31460	31145	1645	29992	29692	1824
	18 (64.4)	33117	21207	1831	33084	21186	1809	36862	22845	1432	34344	21182	1904
20 (68.0)	13 (55.4)	26077	25816	1985	26050	25790	1960	25882	25623	1302	24947	24698	1556
	16 (60.8)	26009	18694	2291	25983	18676	2263	27228	19305	1354	29433	20613	1336

Indoor (°C / °F)		Outdoor (°C / °F)											
DB	WB	16 (60.8)			25 (77.0)			35 (95.0)			46 (114.8)		
		TC	SHC	IP	TC	SHC	IP	TC	SHC	IP	TC	SHC	IP
27 (80.6)	19 (66.2)	33362	27770	1699	29194	24691	2316	27320	24588	2520	18752	16877	2266
	22 (71.6)	34514	21187	1704	31746	19541	2341	30147	15360	2553	20693	10543	2295
23 (73.4)	16 (60.8)	30935	30625	1699	27010	26740	2272	25001	24751	2661	17160	16989	2392
	18 (64.4)	33763	21102	1703	29691	18807	2296	27523	18240	2709	18891	12520	2436
20 (68.0)	13 (55.4)	27043	26773	1422	25298	25045	2270	23053	22823	2614	15824	15665	2350
	16 (60.8)	30784	20001	2304	30316	20463	2914	25751	10132	2848	17675	6954	2560

TC - Total Cooling Capacity (BTU)
SHC - Sensible Heat Capacity (BTU)
IP - Input Power (W)

18.2 Heat Mode Performance Data

Unit setting: Standard piping length, Hi Fan, Heat mode at 30°C (86°F)
Voltage: 208V/230V

18.2.1 CS-XE9WKUAW CU-XE9WKUA

Rated frequency (compressor speed is fixed during forced heating or cooling for capacity measurement and diagnosis purpose)

Indoor (°C / °F)	Outdoor (°C / °F)													
DB	-26.1 (-14.98)		-20 (-4.0)		-8.3 (17.06)		1.7 (35.06)		8.3 (46.94)		12 (53.6)		23.9 (75.02)	
	TC	IP	TC	IP	TC	IP	TC	IP	TC	IP	TC	IP	TC	IP
24 (75.2)	2578	357	5405	569	7582	786	9498	681	10534	670	10541	610	10756	544
20 (68.0)	2704	326	5179	555	7998	750	9752	650	10962	670	11155	620	12036	664
16 (60.8)	3017	312	5875	546	8926	708	10382	613	11752	672	11749	603	12472	597

18.2.2 CS-XE12WKUAW CU-XE12WKUA

Rated frequency (compressor speed is fixed during forced heating or cooling for capacity measurement and diagnosis purpose)

Indoor (°C / °F)	Outdoor (°C / °F)													
DB	-26.1 (-14.98)		-20 (-4.0)		-8.3 (17.06)		1.7 (35.06)		8.3 (46.94)		12 (53.6)		23.9 (75.02)	
	TC	IP	TC	IP	TC	IP	TC	IP	TC	IP	TC	IP	TC	IP
24 (75.2)	2818	426	5910	680	9492	714	10386	813	11519	800	11353	760	11761	649
20 (68.0)	2956	389	5663	662	10013	681	10664	776	11987	800	12017	771	13161	793
16 (60.8)	3299	372	6424	652	11175	643	11353	732	12850	802	12644	749	13637	713

18.2.3 CS-XE15WKUAW CU-XE15WKUA

Rated frequency (compressor speed is fixed during forced heating or cooling for capacity measurement and diagnosis purpose)

Indoor (°C / °F)	Outdoor (°C / °F)													
DB	-26.1 (-14.98)		-20 (-4.0)		-8.3 (17.06)		1.7 (35.06)		8.3 (46.94)		12 (53.6)		23.9 (75.02)	
	TC	IP	TC	IP	TC	IP	TC	IP	TC	IP	TC	IP	TC	IP
24 (75.2)	3948	385	5351	873	10980	1060	12790	1172	16767	1332	17506	1324	18866	1272
20 (68.0)	4050	379	5509	842	11013	1020	12977	1124	17212	1260	18204	1271	19617	1221
16 (60.8)	3835	364	5144	804	11109	975	13116	1076	17639	1191	18692	1203	20144	1156

18.2.4 CS-XE18WKUAW CU-XE18WKUA

Rated frequency (compressor speed is fixed during forced heating or cooling for capacity measurement and diagnosis purpose)

Indoor (°C / °F)	Outdoor (°C / °F)													
DB	-26.1 (-14.98)		-20 (-4.0)		-8.3 (17.06)		1.7 (35.06)		8.3 (46.94)		12 (53.6)		23.9 (75.02)	
	TC	IP	TC	IP	TC	IP	TC	IP	TC	IP	TC	IP	TC	IP
24 (75.2)	6652	1055	9847	1219	14668	1522	16932	1672	19192	1631	19409	1615	20459	1298
20 (68.0)	6975	1022	10086	1206	14265	1504	18386	1651	20388	1630	21291	1639	23272	1501
16 (60.8)	9924	1049	10597	1168	15235	1419	18925	1534	21693	1634	22965	1732	25424	1622

18.2.5 CS-XE24WKUAW CU-XE24WKUA

Rated frequency (compressor speed is fixed during forced heating or cooling for capacity measurement and diagnosis purpose)

Indoor (°C / °F)	Outdoor (°C / °F)													
DB	-26.1 (-14.98)		-20 (-4.0)		-8.3 (17.06)		1.7 (35.06)		8.3 (46.94)		12 (53.6)		23.9 (75.02)	
	TC	IP	TC	IP	TC	IP	TC	IP	TC	IP	TC	IP	TC	IP
24 (75.2)	9427	1631	13954	1884	20786	2353	23994	2585	27197	2522	27504	2497	28992	2007
20 (68.0)	9885	1580	14293	1865	20215	2325	26055	2552	28891	2520	30171	2534	32978	2320
16 (60.8)	14064	1621	15016	1805	21589	2194	26818	2371	30741	2526	32543	2540	36028	2507

18.2.6 CS-XE9WKUAW CU-XE9WKUA

Maximum Capacity

Indoor (°C / °F)	Outdoor (°C / °F)													
DB	-26.1 (-14.98)		-20 (-4.0)		-8.3 (17.06)		1.7 (35.06)		8.3 (46.94)		12 (53.6)		23.9 (75.02)	
	TC	IP	TC	IP	TC	IP	TC	IP	TC	IP	TC	IP	TC	IP
24 (75.2)	4248	879	9623	1402	12367	1473	15653	1677	17360	1651	17207	1568	17726	1340
20 (68.0)	4455	802	9221	1366	13045	1405	16072	1600	18065	1650	18230	1558	19835	1635
16 (60.8)	4973	768	10459	1346	14560	1327	17110	1510	19367	1655	19187	1544	20553	1471

18.2.7 CS-XE12WKUAW CU-XE12WKUA

Maximum Capacity

Indoor (°C / °F)	Outdoor (°C / °F)													
DB	-26.1 (-14.98)		-20 (-4.0)		-8.3 (17.06)		1.7 (35.06)		8.3 (46.94)		12 (53.6)		23.9 (75.02)	
	TC	IP	TC	IP	TC	IP	TC	IP	TC	IP	TC	IP	TC	IP
24 (75.2)	5396	959	11315	1530	14359	1607	19884	1829	22053	1801	22521	1710	22518	1461
20 (68.0)	5660	875	10842	1490	15146	1533	20416	1745	22949	1800	23583	1700	25197	1783
16 (60.8)	6317	838	12299	1468	16904	1448	21735	1647	24602	1806	24852	1684	26109	1605

TC - Total Heating Capacity (W)
IP - Input Power (W)

18.2.8 CS-XE15WKUAW CU-XE15WKUA

Maximum Capacity

Indoor (°C / °F)	Outdoor (°C / °F)													
DB	-26.1 (-14.98)		-20 (-4.0)		-8.3 (17.06)		1.7 (35.06)		8.3 (46.94)		12 (53.6)		23.9 (75.02)	
	TC	IP	TC	IP	TC	IP	TC	IP	TC	IP	TC	IP	TC	IP
24 (75.2)	9634	2188	11444	2395	19505	2571	20042	2712	23388	2801	24410	2785	26325	2625
20 (68.0)	10286	2132	15128	2180	19565	2475	21252	2543	24007	2650	25382	2612	27373	2519
16 (60.8)	8643	2085	10345	2112	19734	2370	20552	2405	24604	2505	26063	2531	28107	2386

18.2.9 CS-XE18WKUAW CU-XE18WKUA

Maximum Capacity

Indoor (°C / °F)	Outdoor (°C / °F)													
DB	-26.1 (-14.98)		-20 (-4.0)		-8.3 (17.06)		1.7 (35.06)		8.3 (46.94)		12 (53.6)		23.9 (75.02)	
	TC	IP	TC	IP	TC	IP	TC	IP	TC	IP	TC	IP	TC	IP
24 (75.2)	9794	1812	14498	2094	22341	2615	24930	2872	28258	2802	28471	2775	30123	2230
20 (68.0)	10270	1756	15709	2072	22836	2584	27071	2836	30018	2800	30867	2945	34265	2578
16 (60.8)	14612	1801	17758	2006	23290	2438	27864	2635	31940	2807	33143	2822	37434	2786

18.2.10 CS-XE24WKUAW CU-XE24WKUA

Maximum Capacity

Indoor (°C / °F)	Outdoor (°C / °F)													
DB	-26.1 (-14.98)		-20 (-4.0)		-8.3 (17.06)		1.7 (35.06)		8.3 (46.94)		12 (53.6)		23.9 (75.02)	
	TC	IP	TC	IP	TC	IP	TC	IP	TC	IP	TC	IP	TC	IP
24 (75.2)	11031	1941	16329	2243	24324	2802	28078	3077	31826	3003	32186	2973	33926	2389
20 (68.0)	11567	1881	17485	2220	23656	2768	30490	3038	33809	3000	35114	3017	38592	2762
16 (60.8)	16458	1930	17572	2149	25263	2612	31383	2823	35973	3007	38083	3023	42161	2985

TC - Total Heating Capacity (BTU)
IP - Input Power (W)

19. Service Data

Service data provided are based on the air conditioner running under rated frequency during forced cooling / forced heating mode.

19.1 Cool Mode Outdoor Air Temperature Characteristic

Condition

- Indoor room temperature: 26.7°C (80°F) Dry Bulb/19.4°C (67°F) Wet Bulb
- Unit setting: Standard piping length, forced cooling at 15.5°C (60°F), Hi fan
- Compressor frequency: Rated for cooling operation
- Piping Length: 7.5 m (24.6 ft)
- Voltage: 208V/230V

19.1.1 CS-XE9WKUAW CU-XE9WKUA

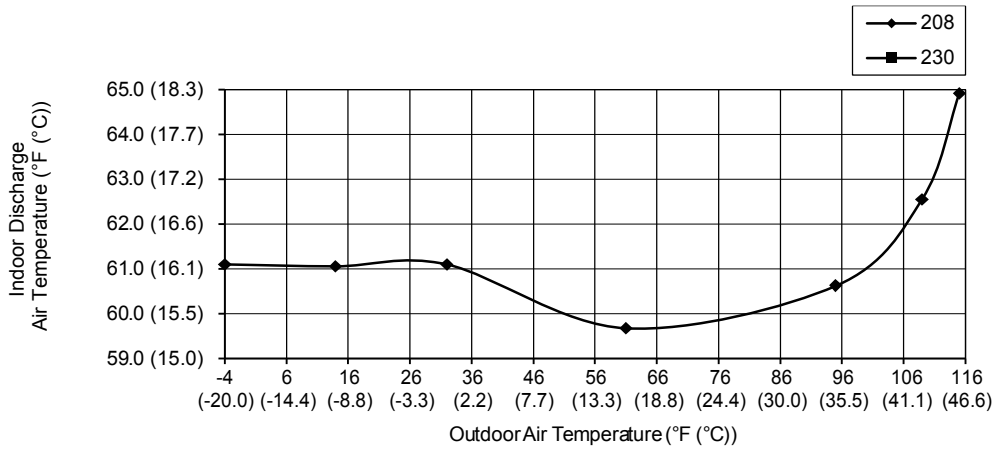

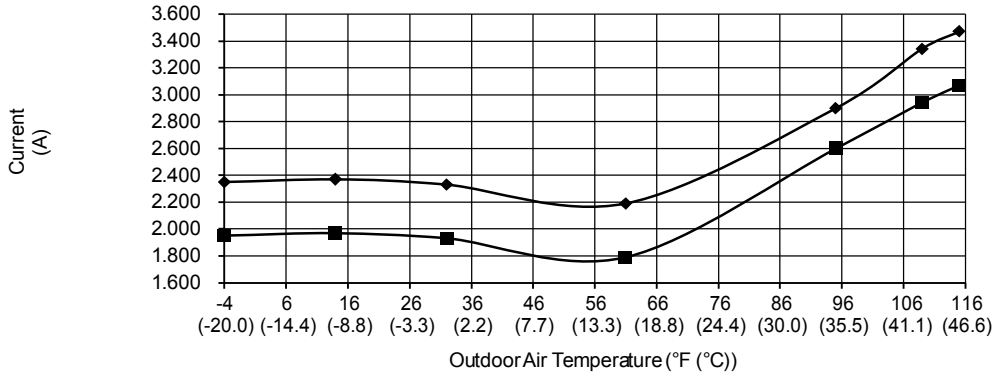

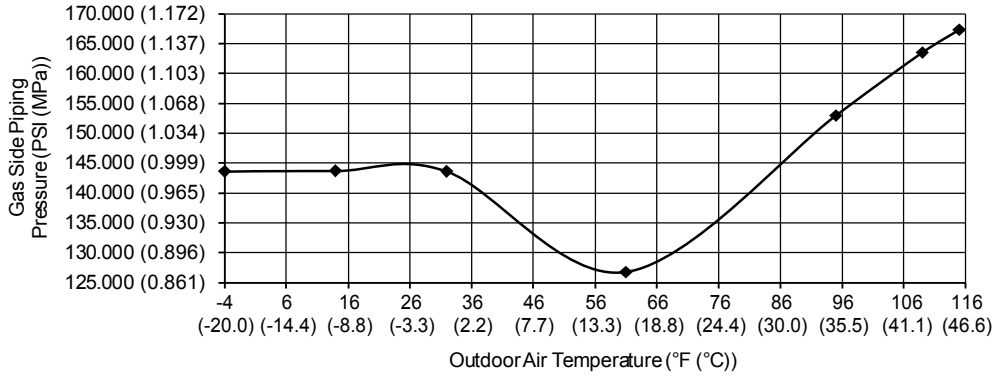

19.1.2 CS-XE12WKUAW CU-XE12WKUA

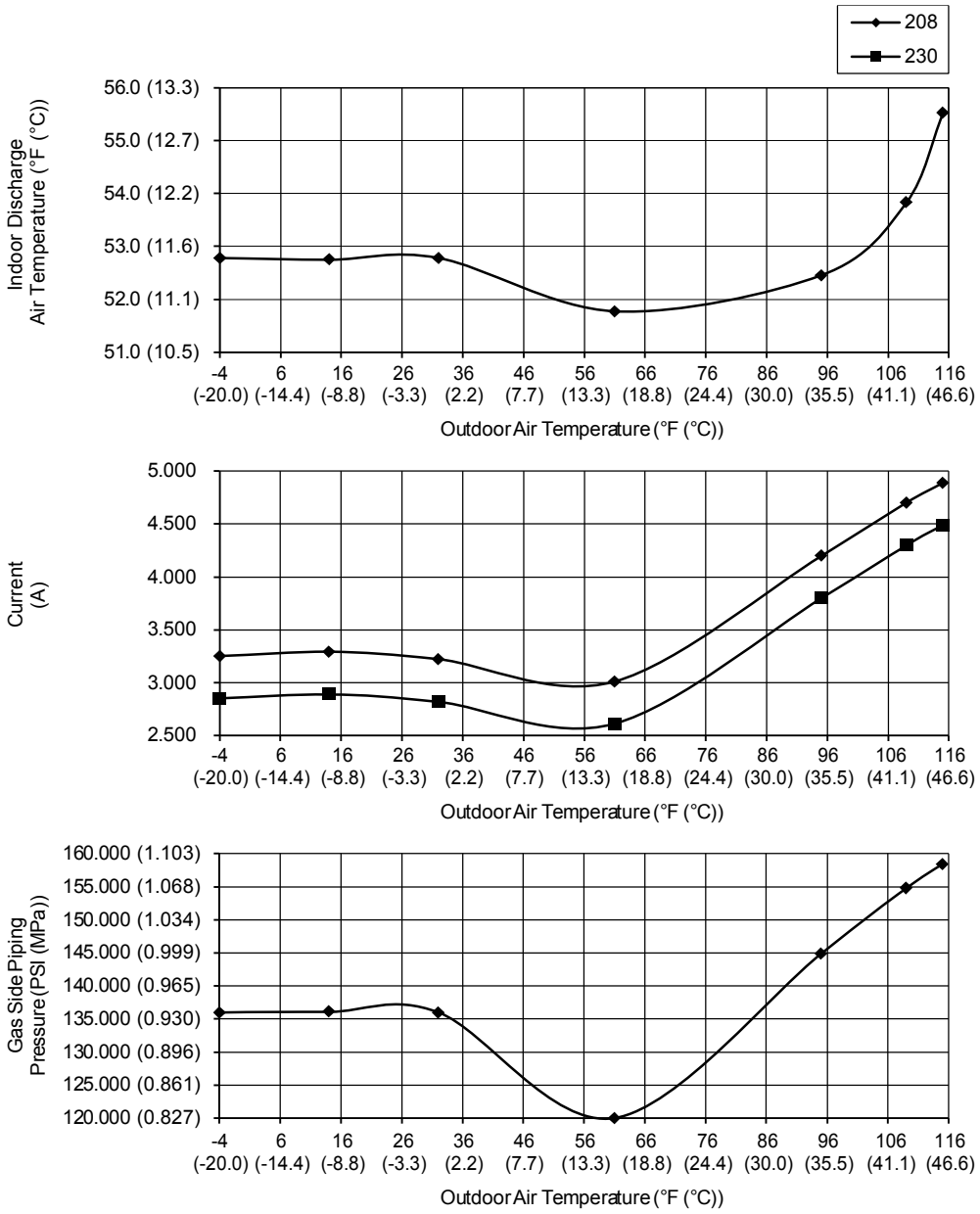

19.1.3 CS-XE15WKUAW CU-XE15WKUA

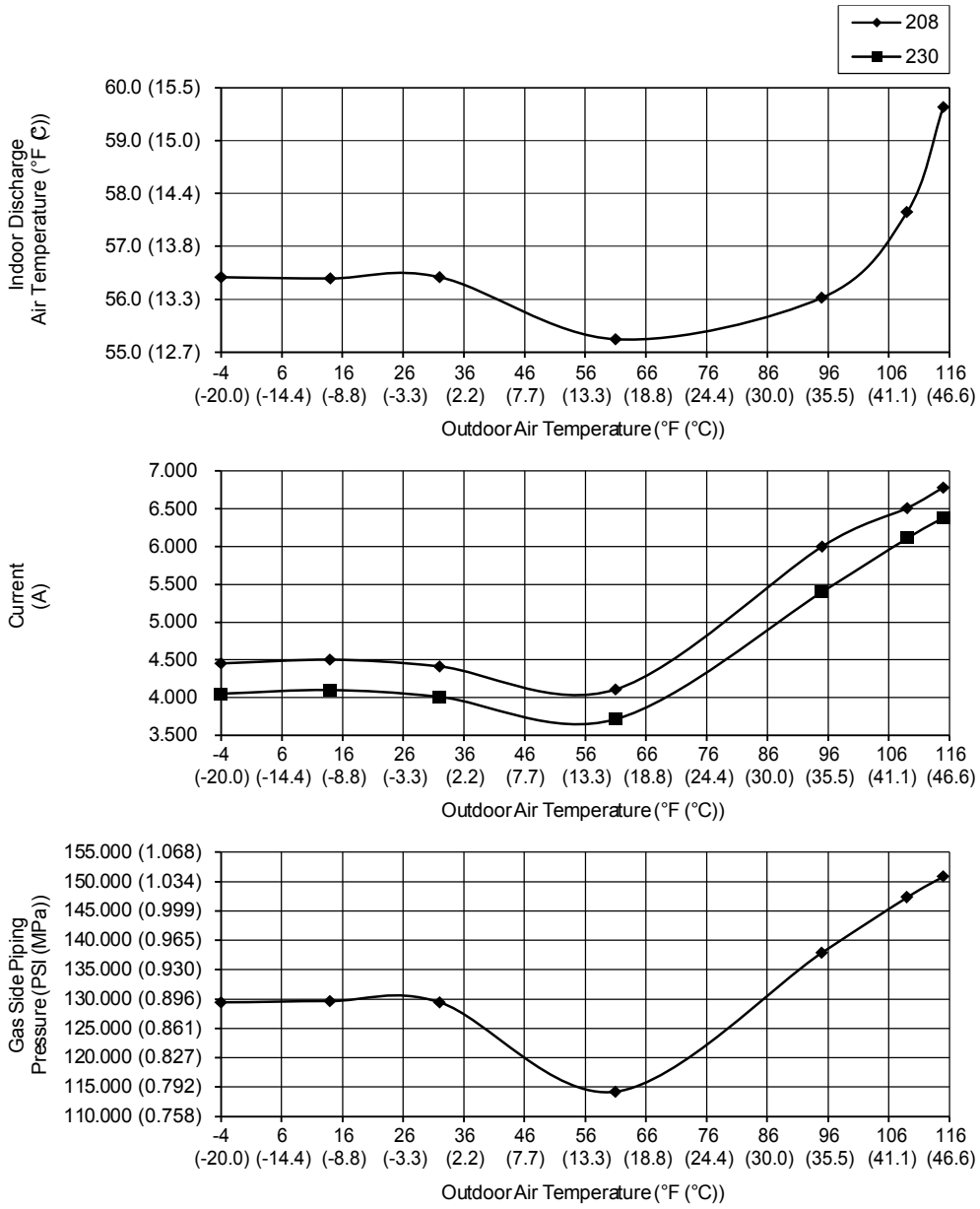

19.1.4 CS-XE18WKUAW CU-XE18WKUA

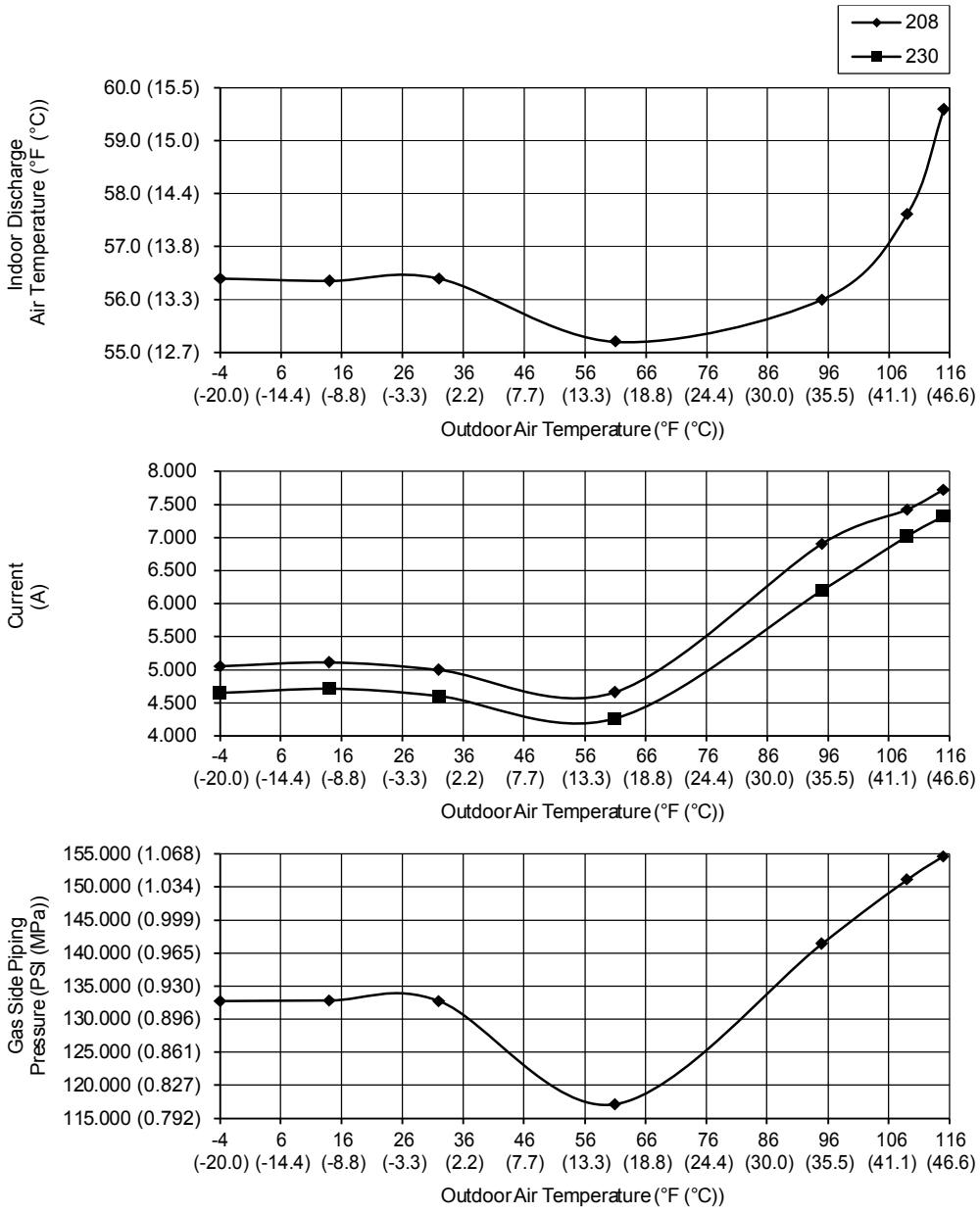

19.1.5 CS-XE24WKUAW CU-XE24WKUA

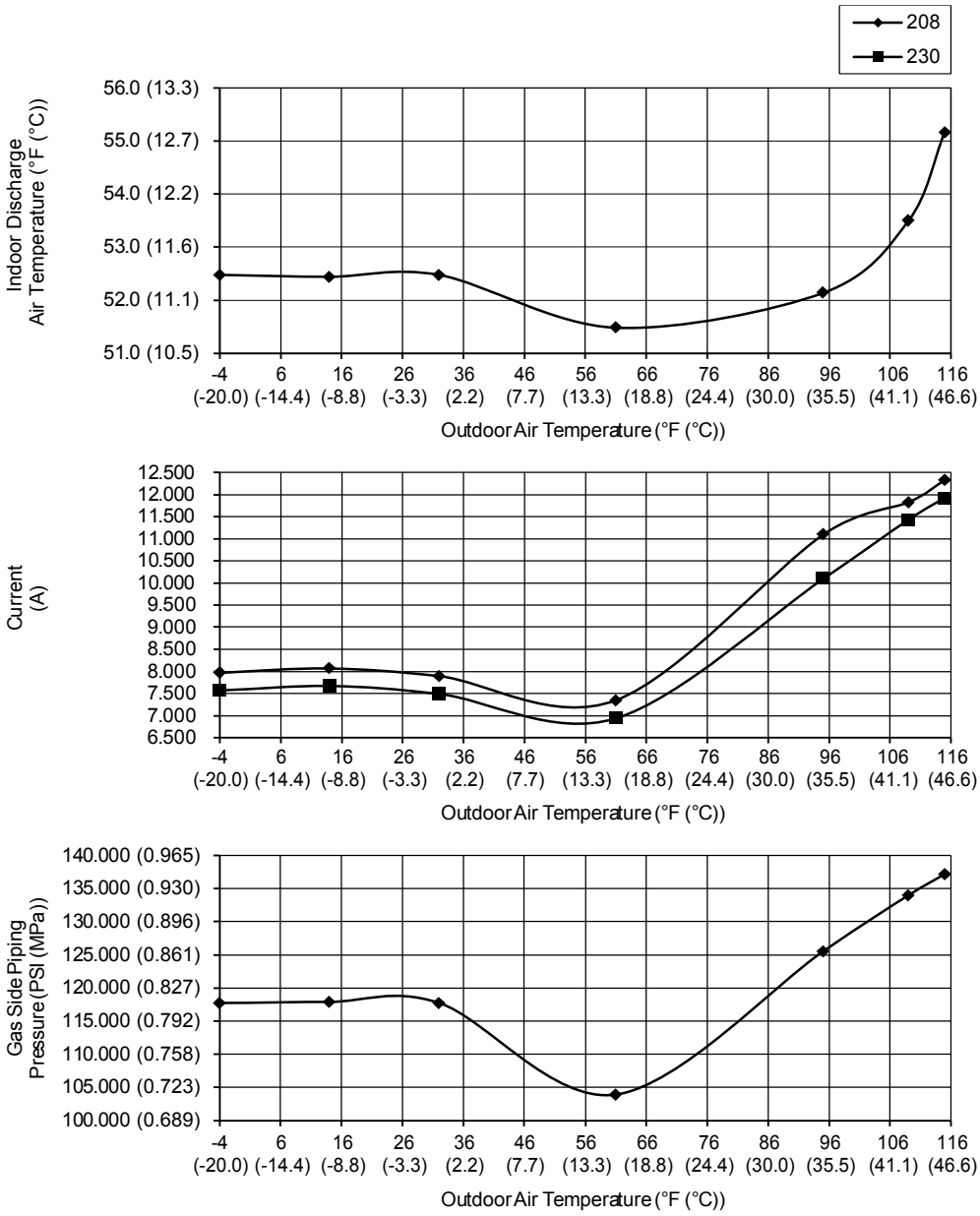

19.2 Heat Mode Outdoor Air Temperature Characteristic

Condition

- Indoor room temperature: 21.1°C (70°F) Dry Bulb/ -°C Wet Bulb
- Unit setting: Standard piping length, forced heating at 30°C (86°F), Hi fan
- Compressor frequency: Rated for Heating operation
- Piping Length: 7.5 m (24.6 ft)
- Voltage: 208V/230V

19.2.1 CS-XE9WKUAW CU-XE9WKUA

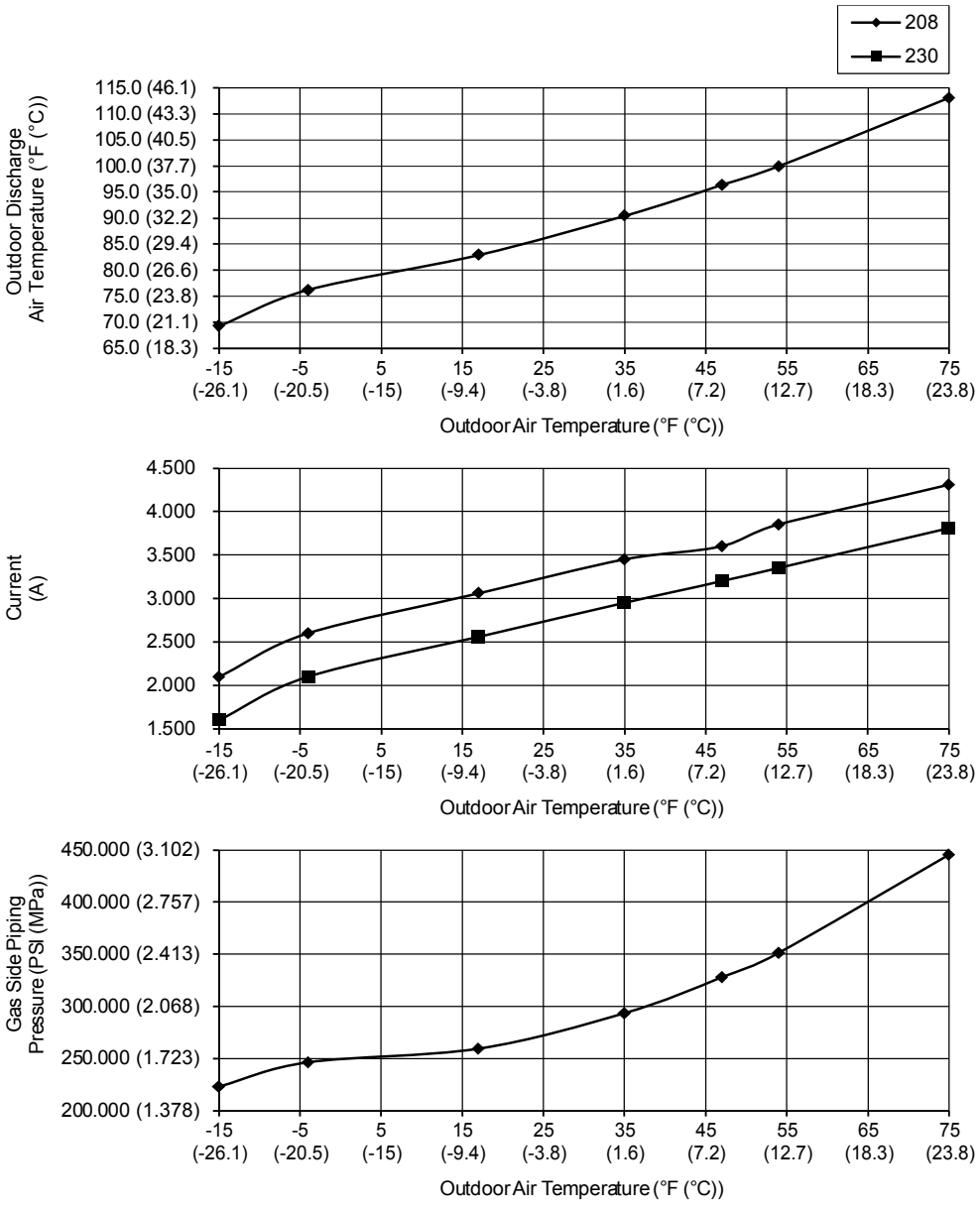

19.2.2 CS-XE12WKUAW CU-XE12WKUA

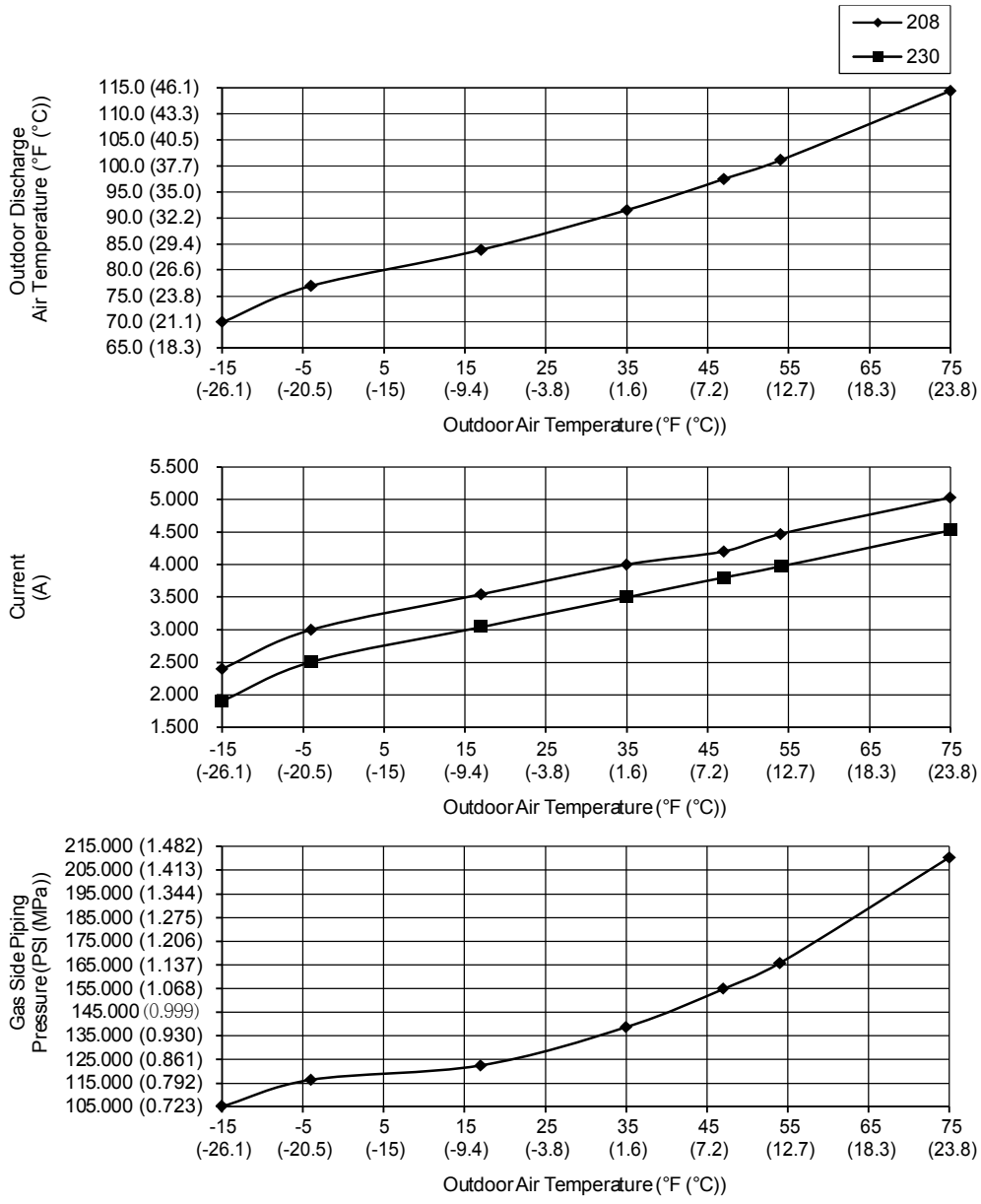

19.2.3 CS-XE15WKUAW CU-XE15WKUA

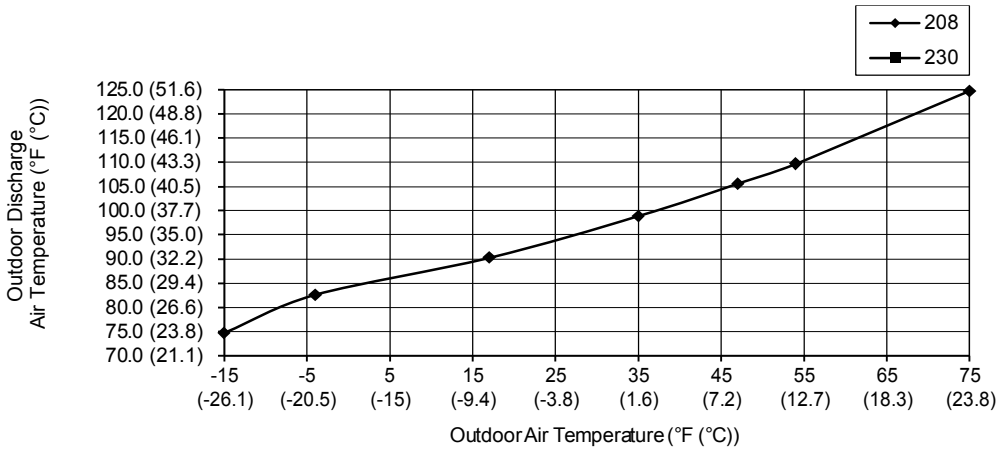

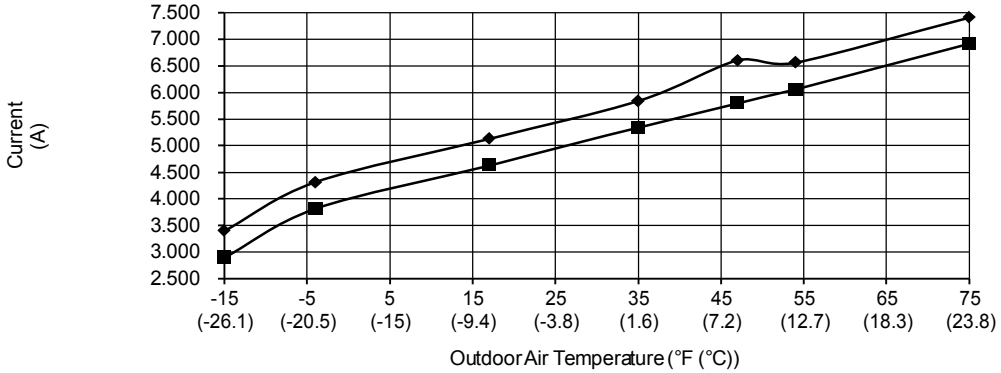

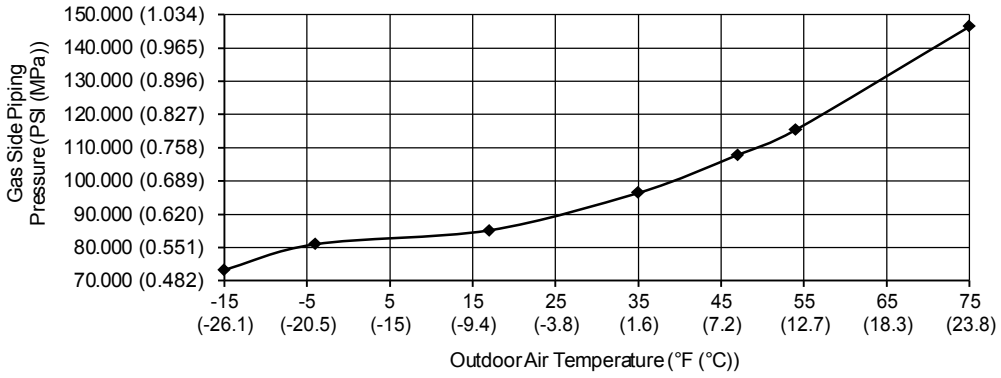

19.2.4 CS-XE18WKUAW CU-XE18WKUA

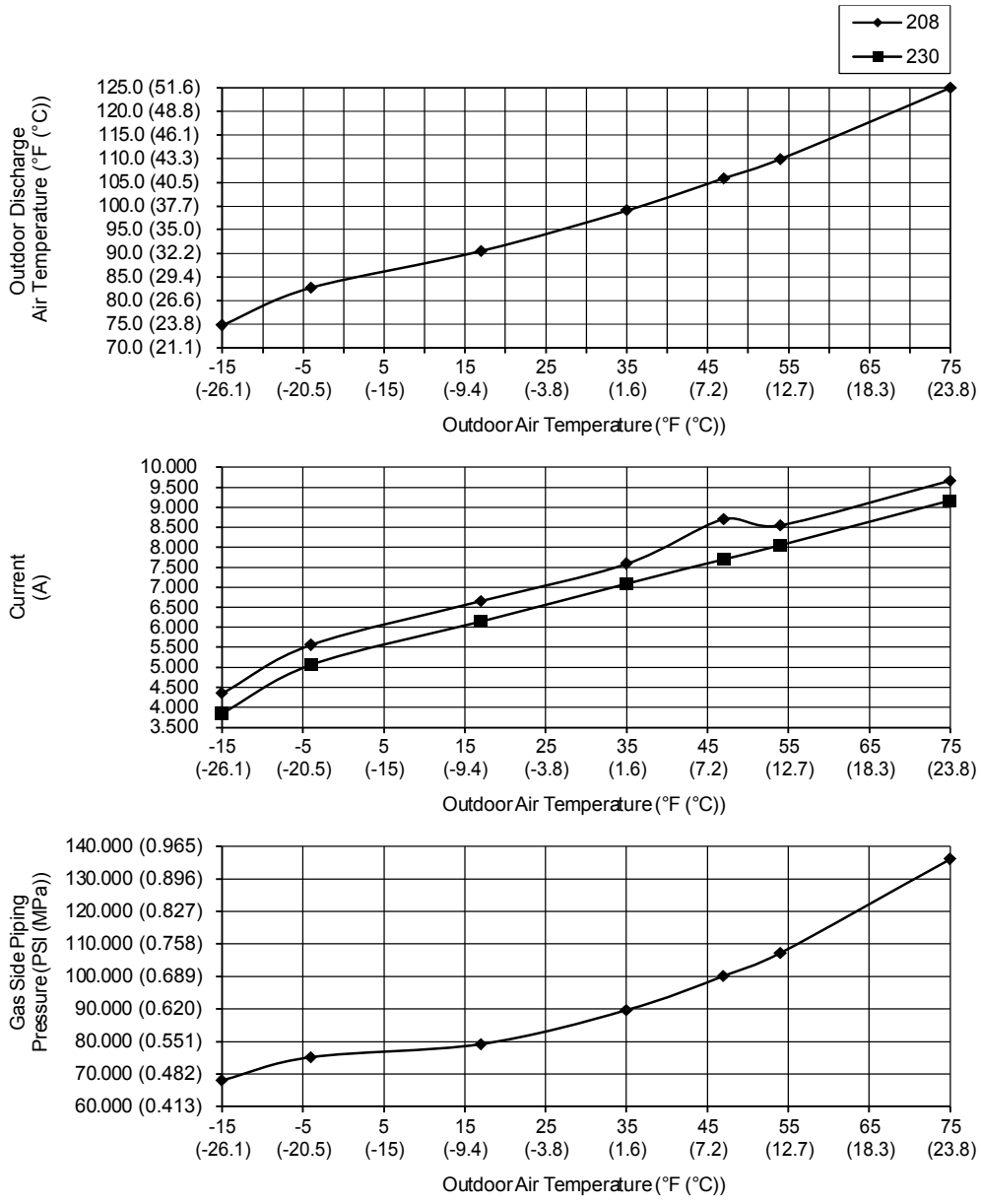

19.2.5 CS-XE24WKUAW CU-XE24WKUA

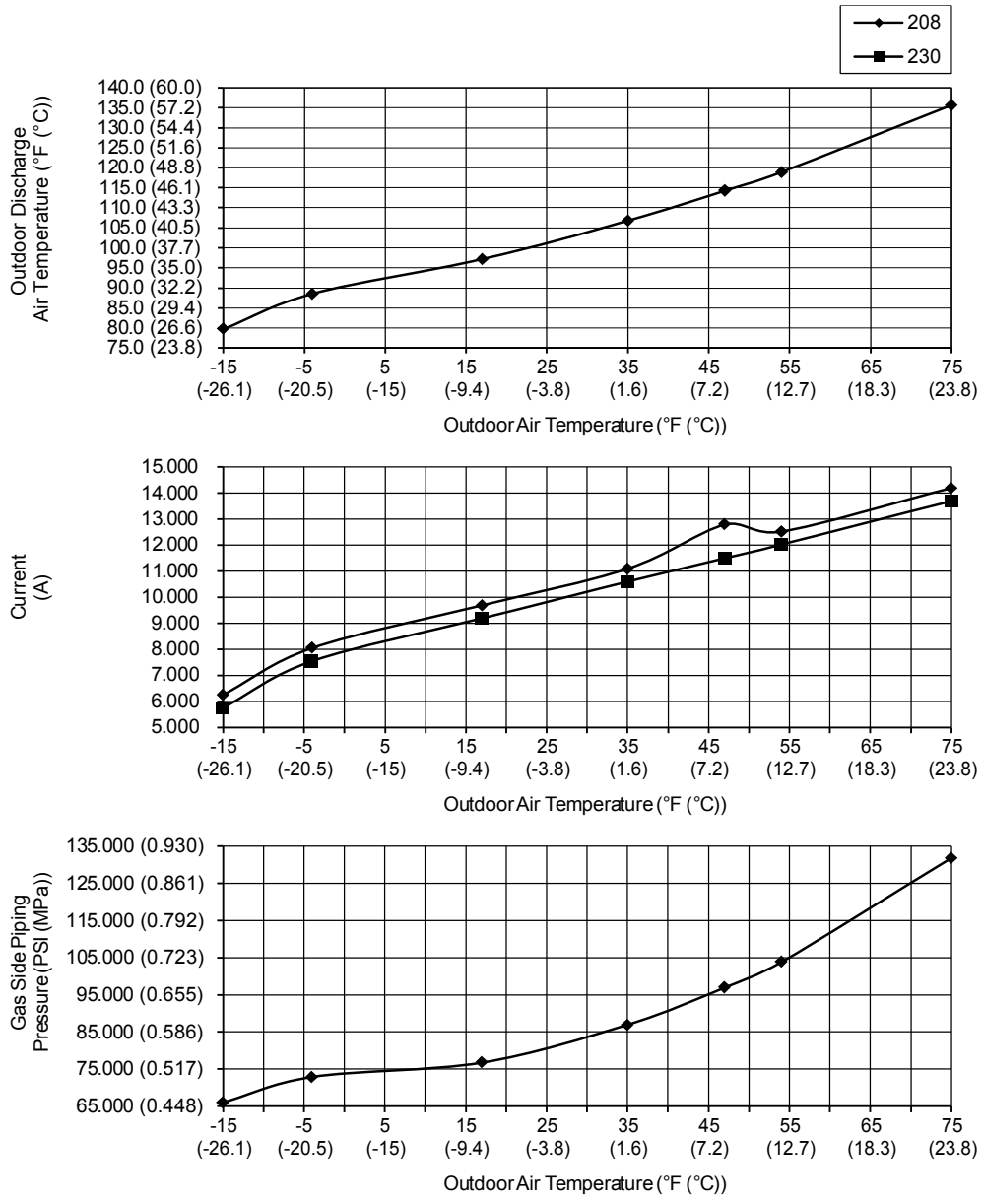

19.3 Piping Length Correction Factor

The characteristic of the unit has to be corrected in accordance with the piping length.

19.3.1 CS-XE9WKUAW CU-XE9WKUA CS-XE12WKUAW CU-XE12WKUA

19.3.1.1 Cooling Capacity

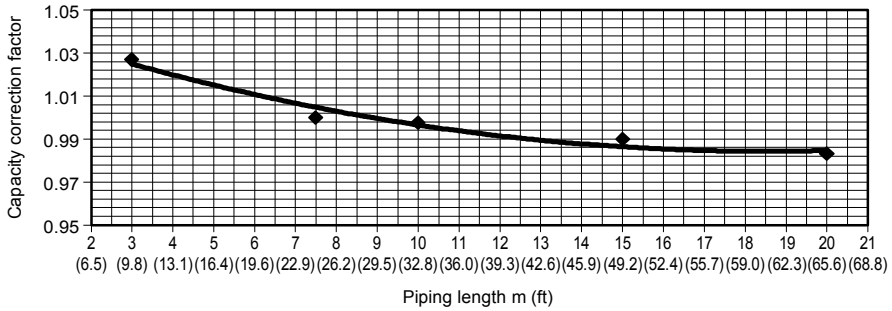

19.3.1.2 Heating Capacity

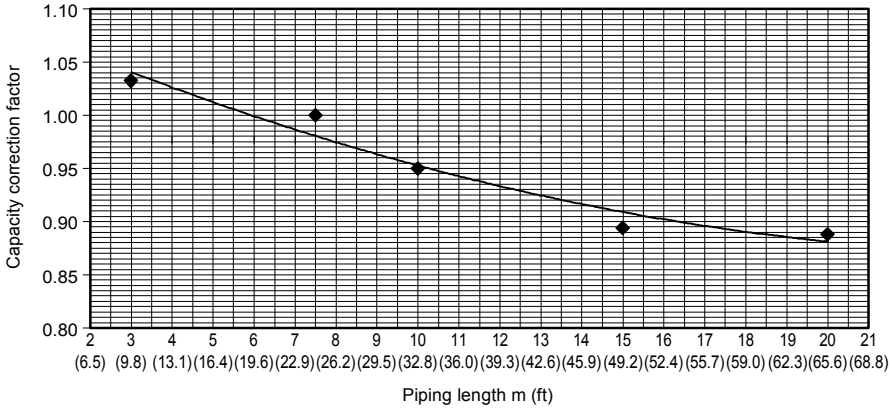

Note: The graphs show the factor after added right amount of additional refrigerant.

19.3.2 CS-XE15WKUAW CU-XE15WKUA

19.3.2.1 Cooling Capacity

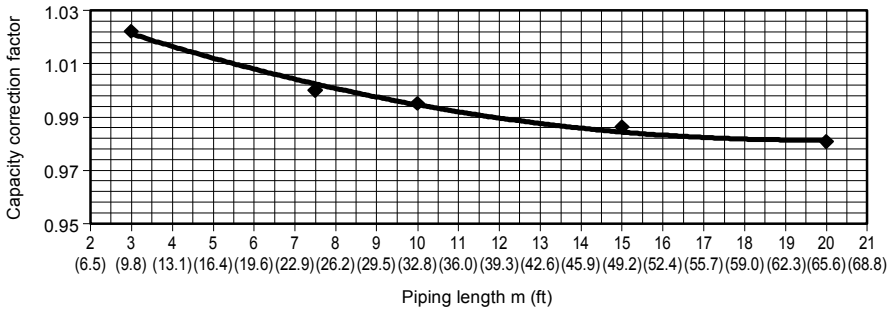

19.3.2.2 Heating Capacity

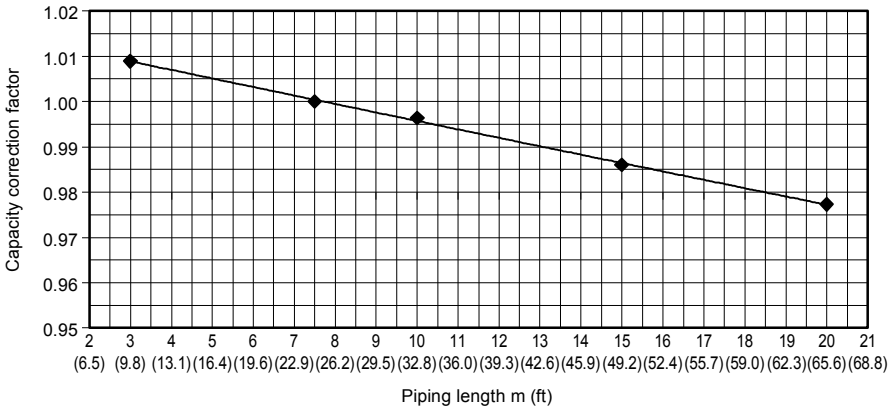

Note: The graphs show the factor after added right amount of additional refrigerant.

19.3.3 CS-XE18WKUAW CU-XE18WKUA CS-XE24WKUAW CU-XE24WKUA

19.3.3.1 Cooling Capacity

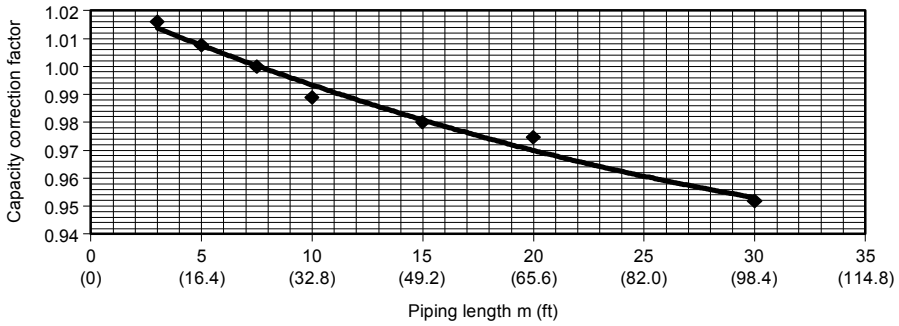

19.3.3.2 Heating Capacity

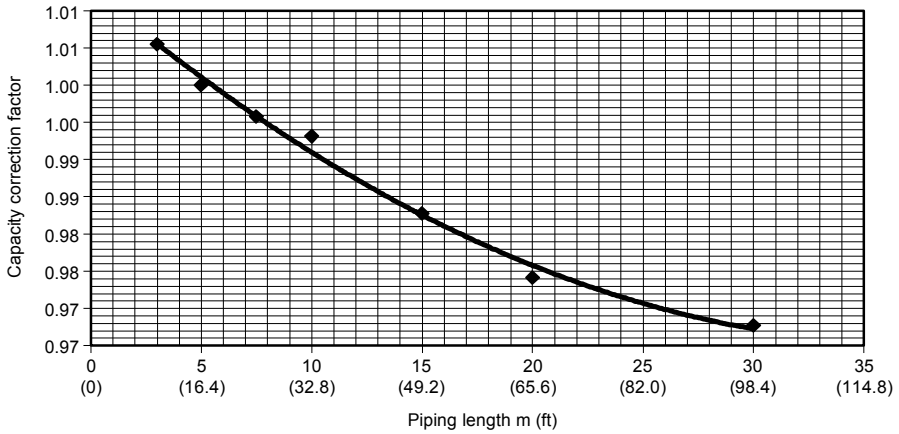

Note: The graphs show the factor after added right amount of additional refrigerant.

20. Exploded View and Replacement Parts List

20.1 Indoor Unit

20.1.1 CS-XE9WKUAW CS-XE12WKUAW CS-XE15WKUAW

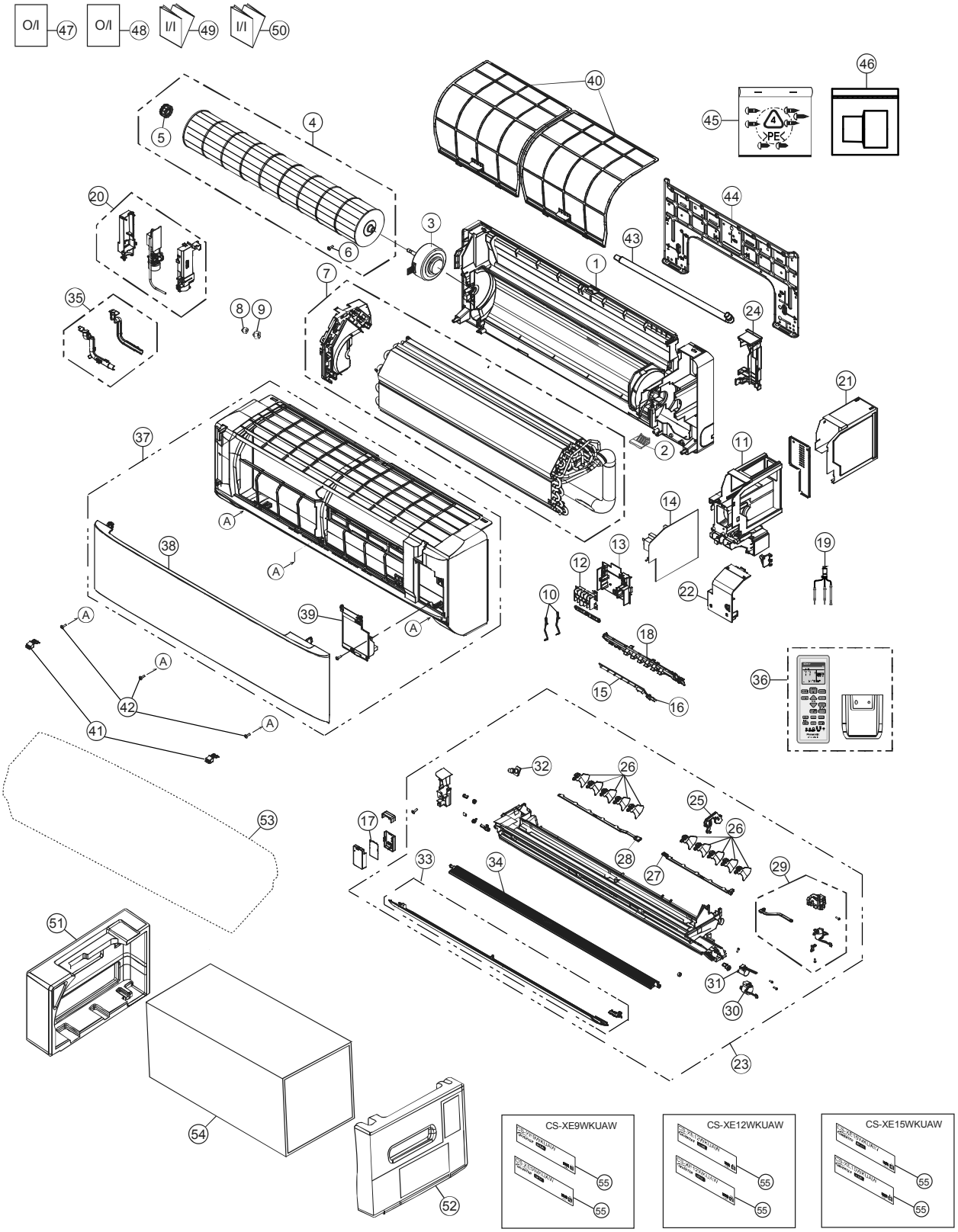

Note
The above exploded view is for the purpose of parts disassembly and replacement.
The non-numbered parts are not kept as standard service parts.

SAFETY PARTS	REF. NO.	PART NAME & DESCRIPTION	QTY	CS-XE9WKUAW	CS-XE12WKUAW	REMARKS
	1	CHASSIS COMPLETE	1	ACXD50C02810	←	
	2	PARTICULAR PIECE	1	-	←	
⚠	3	FAN MOTOR	1	L6CBYYYL0212	←	O
	4	CROSS-FLOW FAN COMPLETE	1	ACXH02C01150	←	
	5	BEARING ASSY	1	CWH64K1010	←	
	6	SCREW - CROSS-FLOW FAN	1	CWH551146	←	
	7	EVAPORATOR	1	ACXB30C00820	ACXB30C00830	
	8	FLARE NUT (LIQUID)	1	CWT251030	←	
	9	FLARE NUT (GAS)	1	CWT251031	CWT251032	
	10	CLIP FOR SENSOR	1	CWH711019	←	
	11	CONTROL BOARD CASING	1	CWH102564A	←	
⚠	12	TERMINAL BOARD COMPLETE	1	CWA28C2616	←	O
	13	PARTICULAR PIECE - TERMINAL	1	CWD933464A	←	
⚠	14	ELECTRONIC CONTROLLER - MAIN	1	ACXA73C59730	ACXA73C59740	O
⚠	15	ELECTRONIC CONTROLLER-INDICATOR	1	ACXA73-33100	←	O
⚠	16	ELECTRONIC CONTROLLER-RECEIVER	1	CWA747456	←	O
⚠	17	ELECTRONIC CONTROLLER- WIFI	1	ACXA73-35190	←	O
	18	INDICATOR HOLDER	1	ACXE39-00910	←	
⚠	19	SENSOR COMPLETE	1	CWA50C2800	←	O
⚠	20	GENERATOR COMPLETE	1	ACXH94C01100	←	O
	21	CONTROL BOARD TOP COVER	1	CWH131531	←	
	22	CONTROL BOARD FRONT COVER CO.	1	CWH13C1309	←	
	23	DISCHARGE GRILLE COMPLETE	1	ACXE20C05470	←	
	24	BACK COVER CHASSIS	1	CWD933463B	←	
	25	FULCRUM	1	CWH621157	←	
	26	VERTICAL VANE	10	ACXE24-03340	←	
	27	CONNECTING BAR (R)	1	ACXE26-02070	←	
	28	CONNECTING BAR (L)	1	ACXE26-02080	←	
⚠	29	AIR SWING MOTOR ASS'Y (VERTICAL VANE)	1	ACXA98K00200	←	O
⚠	30	AIR SWING MOTOR (BIG H.VANE)	1	ACXA98-01960	←	O
⚠	31	AIR SWING MOTOR (SMALL H.VANE)	1	ACXA98-01990	←	O
	32	CAP - DRAIN TRAY	1	CWH521259	←	
	33	HORIZONTAL VANE CO.(BIG)	1	ACXE24C03920	←	
	34	HORIZONTAL VANE CO.(SMALL)	1	CWE24C1421	←	
	35	DUCT-COMPLETE	1	ACXD22C00250	←	
⚠	36	REMOTE CONTROL COMPLETE	1	ACXA75C17890	←	O
	37	FRONT GRILLE COMPLETE	1	ACXE10C11690	←	
	38	INTAKE GRILLE COMPLETE	1	ACXE22K03450	←	
	39	GRILLE DOOR COMPLETE	1	CWE14C1132	←	
	40	AIR FILTER	2	ACXD00-02490	←	
	41	CAP-FRONT GRILLE	2	ACXH52-03310	←	
	42	SCREW - FRONT GRILLE	3	XTT4+16CFJ	←	
	43	DRAIN HOSE	1	ACXH85-00210	←	
	44	INSTALLATION PLATE	1	CWH361134	←	
	45	BAG COMPLETE - INSTALLATION SCREW	1	CWH82C1705	←	
	46	BAG COMPLETE (TUBE CONNECTOR)	1	CWH82C2030	←	
	47	OPERATING INSTRUCTION	1	ACXF55-27110	←	

SAFETY PARTS	REF. NO.	PART NAME & DESCRIPTION	QTY	CS-XE9WKUAW	CS-XE12WKUAW	REMARKS
	48	OPERATING INSTRUCTION	1	ACXF55-27121	←	
	49	INSTALLATION INSTRUCTION	1	ACXF60-38950	←	
	50	INSTALLATION INSTRUCTION	1	ACXF60-38960	←	
	51	SHOCK ABSORBER	1	ACXG70-10660	←	
	52	SHOCK ABSORBER	1	ACXG70-10670	←	
	53	BAG	1	CWG861515	←	
	54	C.C.CASE	1	ACXG50-55910	←	
	55	MODEL LABEL	2	ACXF85-34280	ACXF85-34290	

(NOTE)

- All parts are supplied from PAPAMY, Malaysia (Vendor Code: 00029488).
- “O” marked parts are recommended to be kept in stock.

SAFETY PARTS	REF. NO.	PART NAME & DESCRIPTION	QTY	CS-XE15WKUAW	REMARKS
	1	CHASSIS COMPLETE	1	ACXD50C02810	
	2	PARTICULAR PIECE	1	CWD933067	
⚠	3	FAN MOTOR	1	L6CBYYYL0212	O
	4	CROSS-FLOW FAN COMPLETE	1	ACXH02C01150	
	5	BEARING ASSY	1	CWH64K1010	
	6	SCREW - CROSS-FLOW FAN	1	CWH551146	
	7	EVAPORATOR	1	ACXB30C02330	
	8	FLARE NUT (LIQUID)	1	CWT251030	
	9	FLARE NUT (GAS)	1	CWT251032	
	10	CLIP FOR SENSOR	1	CWH32142	
	11	CONTROL BOARD CASING	1	CWH102564A	
⚠	12	TERMINAL BOARD COMPLETE	1	CWA28C2616	O
	13	PARTICULAR PIECE - TERMINAL	1	CWD933464A	
⚠	14	ELECTRONIC CONTROLLER - MAIN	1	ACXA73C59750	O
⚠	15	ELECTRONIC CONTROLLER-INDICATOR	1	ACXA73-33100	O
⚠	16	ELECTRONIC CONTROLLER-RECEIVER	1	CWA747456	O
⚠	17	ELECTRONIC CONTROLLER- WIFI	1	ACXA73-35190	O
	18	INDICATOR HOLDER	1	ACXE39-00910	
⚠	19	SENSOR COMPLETE	1	CWA50C2800	O
⚠	20	GENERATOR COMPLETE	1	ACXH94C01100	O
	21	CONTROL BOARD TOP COVER	1	CWH131531	
	22	CONTROL BOARD FRONT COVER CO.	1	CWH13C1309	
	23	DISCHARGE GRILLE COMPLETE	1	ACXE20C05470	
	24	BACK COVER CHASSIS	1	CWD933463B	
	25	FULCRUM	1	CWH621157	
	26	VERTICAL VANE	10	ACXE24-03340	
	27	CONNECTING BAR (R)	1	ACXE26-02070	
	28	CONNECTING BAR (L)	1	ACXE26-02080	
⚠	29	AIR SWING MOTOR ASS'Y (VERTICAL VANE)	1	ACXA98K00200	O
⚠	30	AIR SWING MOTOR (BIG H.VANE)	1	ACXA98-01960	O
⚠	31	AIR SWING MOTOR (SMALL H.VANE)	1	ACXA98-01990	O
	32	CAP - DRAIN TRAY	1	CWH521259	
	33	HORIZONTAL VANE CO.(BIG)	1	ACXE24C03920	
	34	HORIZONTAL VANE CO.(SMALL)	1	CWE24C1421	
	35	DUCT-COMPLETE	1	ACXD22C00250	
⚠	36	REMOTE CONTROL COMPLETE	1	ACXA75C17890	O
	37	FRONT GRILLE COMPLETE	1	ACXE10C11690	
	38	INTAKE GRILLE COMPLETE	1	ACXE22K03450	
	39	GRILLE DOOR COMPLETE	1	CWE14C1132	
	40	AIR FILTER	2	ACXD00-02490	
	41	CAP-FRONT GRILLE	2	ACXH52-03310	
	42	SCREW - FRONT GRILLE	3	XTT4+16CFJ	
	43	DRAIN HOSE	1	ACXH85-00210	
	44	INSTALLATION PLATE	1	CWH361134	
	45	BAG COMPLETE - INSTALLATION SCREW	1	CWH82C1705	
	46	BAG COMPLETE (TUBE CONNECTOR)	1	CWH82C2030	
	47	OPERATING INSTRUCTION	1	ACXF55-27110	

SAFETY PARTS	REF. NO.	PART NAME & DESCRIPTION	QTY	CS-XE15WKUAW	REMARKS
	48	OPERATING INSTRUCTION	1	ACXF55-27121	
	49	INSTALLATION INSTRUCTION	1	ACXF60-38950	
	50	INSTALLATION INSTRUCTION	1	ACXF60-38960	
	51	SHOCK ABSORBER	1	ACXG70-10660	
	52	SHOCK ABSORBER	1	ACXG70-10670	
	53	BAG	1	CWG861515	
	54	C.C.CASE	1	ACXG50-55910	
	55	MODEL LABEL	2	ACXF85-34300	

(NOTE)

- All parts are supplied from PAPAMY, Malaysia (Vendor Code: 00029488).
- “O” marked parts are recommended to be kept in stock.

20.1.2 CS-XE18WKUAW CS-XE24WKUAW

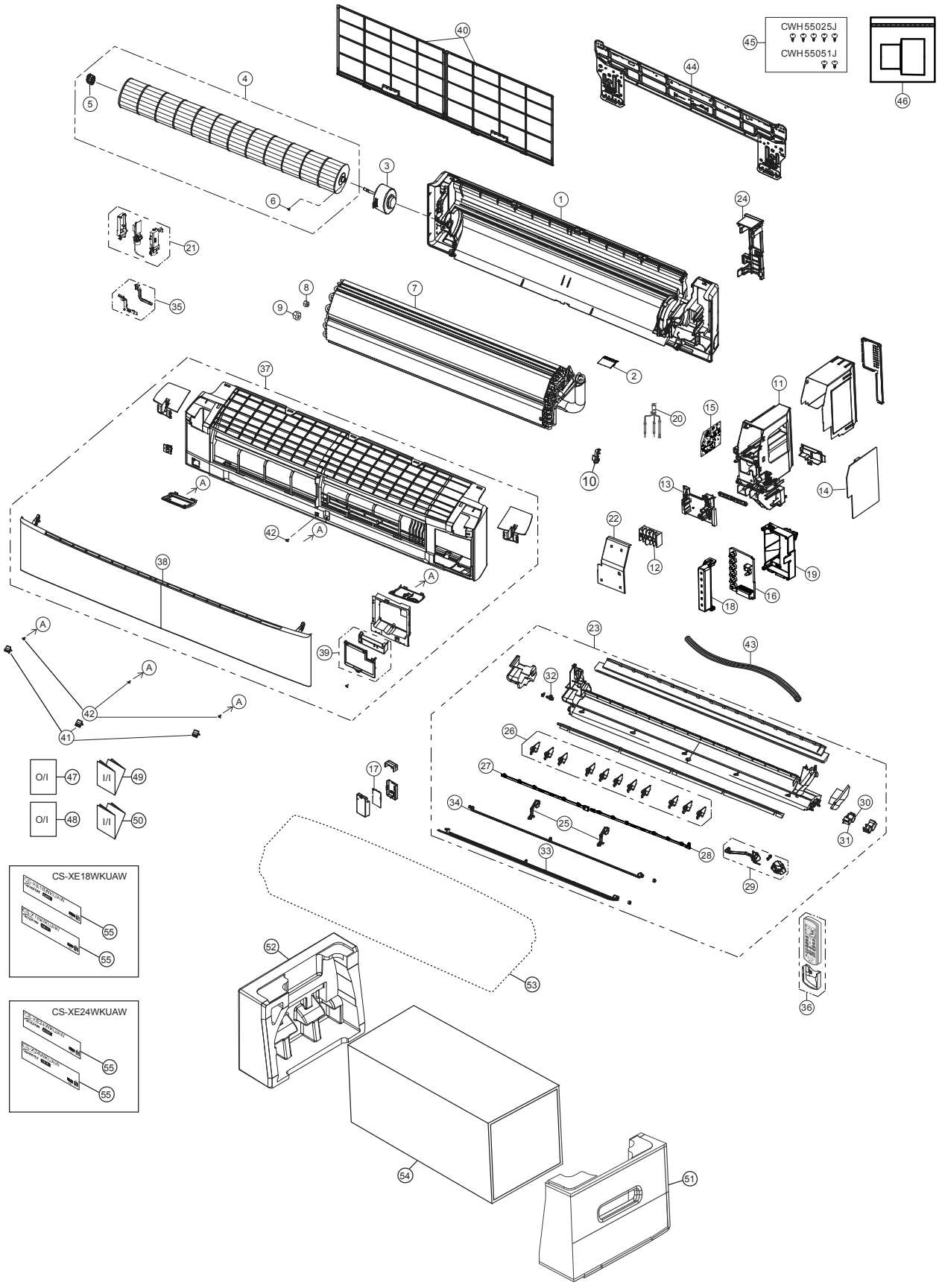

Note
The above exploded view is for the purpose of parts disassembly and replacement.
The non-numbered parts are not kept as standard service parts.

SAFETY PARTS	REF. NO.	PART NAME & DESCRIPTION	QTY.	CS-XE18WKUAW	CS-XE24WKUAW	REMARKS
	1	CHASSIS COMPLETE	1	ACXD50C01591	←	
	2	PARTICULAR PIECE	1	ACXD93-10020	←	
⚠	3	FAN MOTOR	1	L6CBYYYL0335	←	O
	4	CROSS-FLOW FAN COMPLETE	1	CWH02C1136	←	
	5	BEARING ASSY	1	CWH64K1010	←	
	6	SCREW - CROSS-FLOW FAN	1	CWH551146	←	
	7	EVAPORATOR	1	ACXB30C30900	ACXB30C30250	
	8	FLARE NUT (LIQUID)	1	CWT251030	←	
	9	FLARE NUT (GAS)	1	CWT251032	CWT251033	
	10	CLIP FOR SENSOR	1	CWH32142	←	
	11	CONTROL BOARD CASING	1	ACXH10-08120A	←	
⚠	12	TERMINAL BOARD COMPLETE	1	CWA28C2357	←	O
	13	PARTICULAR PIECE - TERMINAL	1	CWD933137A	←	
⚠	14	ELECTRONIC CONTROLLER - MAIN	1	ACXA73C59720	ACXA73C59760	O
⚠	15	ELECTRONIC CONTROLLER - SUB	1	ACXA73-31220	←	O
⚠	16	ELECTRONIC CONTROLLER-INDICATOR	1	ACXA73-33110	←	O
⚠	17	ELECTRONIC CONTROLLER- WIFI	1	ACXA73-35190	←	O
	18	INDICATOR HOLDER	1	ACXD93-01960	←	
	19	INDICATOR HOLDER	1	ACXD93-01970	←	
⚠	20	SENSOR COMPLETE	1	CWA50C3228	←	O
⚠	21	GENERATOR COMPLETE	1	ACXH94C01110	←	O
	22	CONTROL BOARD FRONT COVER CO.	1	ACXH13C05650	←	
	23	DISCHARGE GRILLE COMPLETE	1	ACXE20C05480	←	
	24	BACK COVER CHASSIS	1	ACXD93-10180	←	
	25	FULCRUM	2	ACXH62-00080	←	
	26	VERTICAL VANE	11	ACXE24-00400	←	
	27	CONNECTING BAR (L)	1	ACXE26-00190	←	
	28	CONNECTING BAR (R)	1	ACXE26-00200	←	
⚠	29	AIR SWING MOTOR ASS'Y	1	ACXA98K00030	←	O
⚠	30	AIR SWING MOTOR (BIG H.VANE)	1	ACXA98-02000	←	O
⚠	31	AIR SWING MOTOR (SMALL H.VANE)	1	ACXA98-01990	←	O
	32	CAP - DRAIN TRAY	1	CWH521259	←	
	33	HORIZONTAL VANE CO.(BIG)	1	ACXE24C01031	←	
	34	HORIZONTAL VANE CO.(SMALL)	1	ACXE24C00540	←	
	35	DUCT-COMPLETE	1	ACXD22C00240	←	
⚠	36	REMOTE CONTROL COMPLETE	1	ACXA75C17890	←	O
	37	FRONT GRILLE COMPLETE	1	ACXE10C11230	←	
	38	INTAKE GRILLE COMPLETE	1	ACXE22C00870	←	
	39	GRILLE DOOR COMPLETE	1	ACXE14C01330	←	
	40	AIR FILTER	2	ACXD00-00250	←	
	41	CAP-FRONT GRILLE	3	ACXH52-00100	←	
	42	SCREW - FRONT GRILLE	4	XTT4+16CFJ	←	
	43	DRAIN HOSE	1	ACXH85-00210	←	
	44	INSTALLATION PLATE	1	ACXH36-00080	←	
	45	BAG COMPLETE - INSTALLATION SCREW	1	CWH82C1705	←	
	46	BAG COMPLETE (TUBE CONNECTOR)	1	CWH82C2030	←	
	47	OPERATING INSTRUCTION	1	ACXF55-27201	←	

SAFETY PARTS	REF. NO.	PART NAME & DESCRIPTION	QTY.	CS-XE18WKUAW	CS-XE24WKUAW	REMARKS
	48	OPERATING INSTRUCTION	1	ACXF55-27121	←	
	49	INSTALLATION INSTRUCTION	1	ACXF60-39140	←	
	50	INSTALLATION INSTRUCTION	1	ACXF60-39150	←	
	51	SHOCK ABSORBER - RIGHT	1	ACXG70-01220	←	
	52	SHOCK ABSORBER - LEFT	1	ACXG70-01230	←	
	53	BAG	1	ACXG86-00130	←	
	54	C.C.CASE	1	ACXG50-55920	←	
	55	MODEL LABEL	2	ACXF85-34310	ACXF85-34320	

(NOTE)

- All parts are supplied from PAPAMY, Malaysia (Vendor Code: 00029488).
- “O” marked parts are recommended to be kept in stock.

20.2 Outdoor Unit

20.2.1 CU-XE9WKUA CU-XE12WKUA

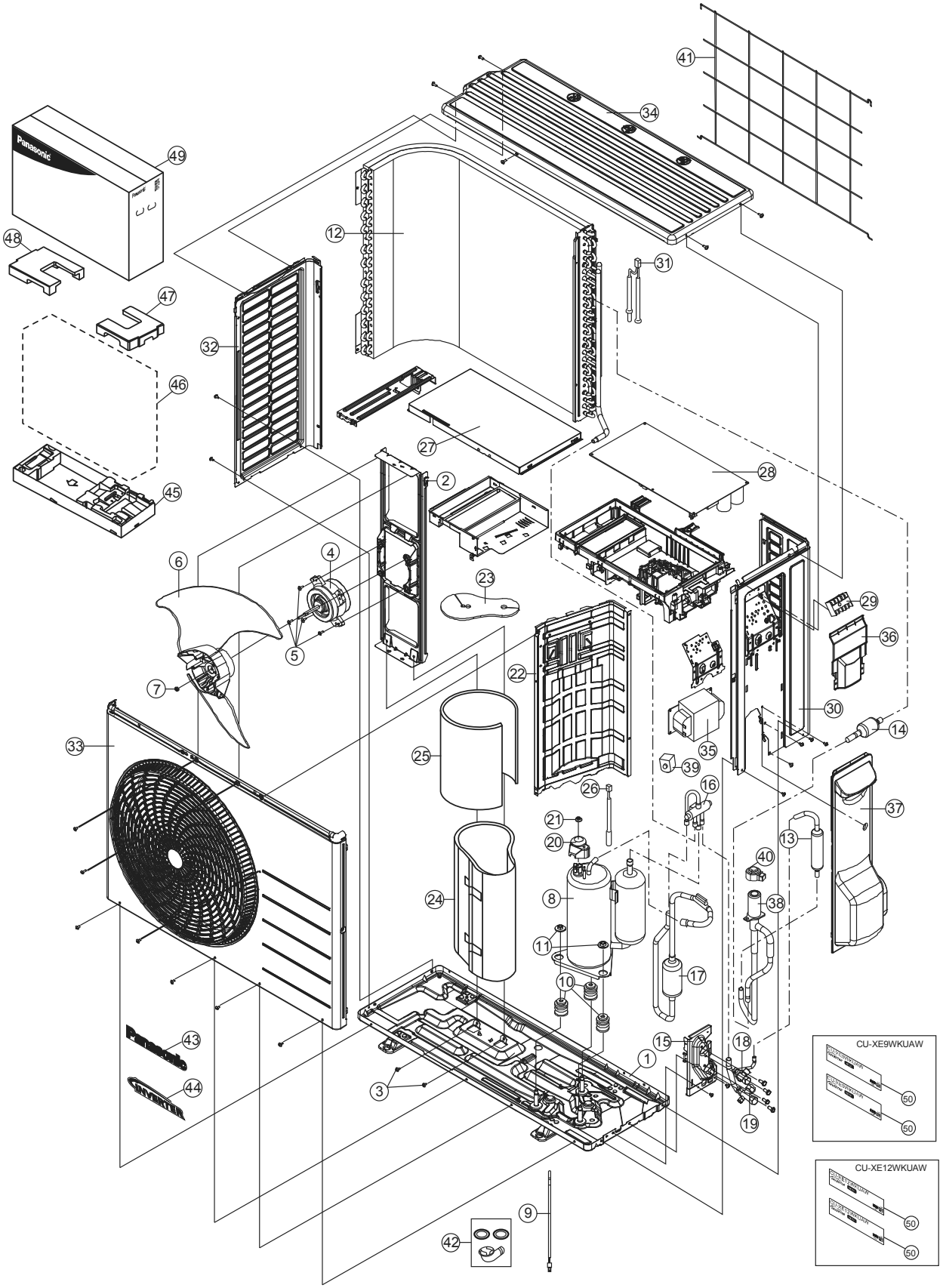

Note
The above exploded view is for the purpose of parts disassembly and replacement.
The non-numbered parts are not kept as standard service parts.

SAFETY PARTS	REF. NO.	PART NAME & DESCRIPTION	QTY.	CU-XE9WKUA	CU-XE12WKUA	REMARK
	1	CHASSIS COMPLETE	1	ACXD52K03400A	←	
	2	FAN MOTOR BRACKET	1	CWD541167	←	
	3	SCREW - FAN MOTOR BRACKET	2	CWH551217	←	
⚠	4	FAN MOTOR	1	L6CAYYYL0133	←	O
	5	SCREW - FAN MOTOR MOUNT	4	CWH55252J	←	
	6	PROPELLER FAN ASSY	1	CWH03K1066	←	
	7	NUT - PROPELLER FAN	1	CWH56053J	←	
⚠	8	COMPRESSOR	1	5RS102XTA21	←	O
	9	CRANKCASE HEATER	1	CWA341072	←	
	10	ANTI - VIBRATION BUSHING	3	CWH50077	←	
	11	NUT - COMPRESSOR MOUNT	3	CWH561096	←	
	12	CONDENSER	1	ACXB32C19720	←	
	13	DISCHARGE MUFFLER(EXP VALVE)	1	CWB121021	←	
	14	STRAINER	1	CWB111061	←	
	15	HOLDER COUPLING	1	CWH351231A	←	
	16	4-WAYS VALVE	1	CWB001058	←	
	17	DISCHARGE MUFFLER(4 W.VALVE)	1	CWB121047	←	
	18	2-WAYS VALVE (LIQUID)	1	CWB021654	←	
	19	3-WAY VALVE (GAS)	1	CWB011374	CWB011344	
	20	TERMINAL COVER	1	CWH171039A	←	
	21	NUT - TERMINAL COVER	1	CWH7080300J	←	
	22	SOUND PROOF BOARD	1	CWH151273	←	
	23	SOUND PROOF MATERIAL - COMP. TOP	1	CWG302719	←	
	24	SOUND PROOF MATERIAL - COMP. BODY	1	ACXG30-10570	←	
	25	SOUND PROOF MATERIAL	1	ACXG30-08500	←	
⚠	26	SENSOR CO-COMP TEMP	1	ACXA50C15830	←	O
	27	CONTROL BOARD COVER-TOP	1	CWH131473	←	
⚠	28	ELECTRONIC CONTROLLER - MAIN	1	ACXA73C61380R	ACXA73C61390R	O
⚠	29	TERMINAL BOARD ASSY	1	CWA28K1154	←	O
	30	CABINET SIDE PLATE CO. - RIGHT	1	ACXE04C06820	←	
⚠	31	SENSOR CO-AIR TEMP AND PIPE TEMP	1	ACXA50C15840	←	O
	32	CABINET SIDE PLATE - LEFT	1	ACXE04-11650A	←	
	33	CABINET FRONT PLATE CO.	1	ACXE06C03770	←	
	34	CABINET TOP PLATE	1	ACXE03-04400A	←	
⚠	35	REACTOR	1	G0C392J00039	←	O
	36	CONTROL BOARD COVER	1	CWH131470	←	
	37	CONTROL BOARD COVER-COMPLETE	1	ACXH13C05720	←	
	38	EXPANSION VALVE	1	ACXB05-00400	←	
⚠	39	V-COIL COMPLETE (4 WAY VALVE)	1	ACXA43C00270	←	O
⚠	40	V-COIL COMPLETE (EXPENSION VALVE)	1	ACXA43C01520	←	O
	41	WIRE NET	1	CWD041200A	←	
	42	BAG-COMPLETE (L-TUBE)	1	ACXH82C00350	←	
	43	BADGE -PANASONIC	1	CWE373439	←	
	44	BADGE -INVERTER	1	CWE373441	←	
	45	BASE BOARD-COMPLETE	1	CWG62C1162	←	
	46	BAG	1	ACXG86-03760	←	
	47	SHOCK ABSORBER (R)	1	CWG713415	←	

SAFETY PARTS	REF. NO.	PART NAME & DESCRIPTION	QTY.	CU-XE9WKUA	CU-XE12WKUA	REMARK
	48	SHOCK ABSORBER (L)	1	CWG713416	←	
	49	C.C.CASE	1	ACXG50-48900	←	
	50	MODEL LABEL	2	ACXF85-26660	ACXF85-26670	

(NOTE)

- All parts are supplied from PAPAMY, Malaysia (Vendor Code: 00029488).
- “O” marked parts are recommended to be kept in stock.

20.2.2 CU-XE15WKUA

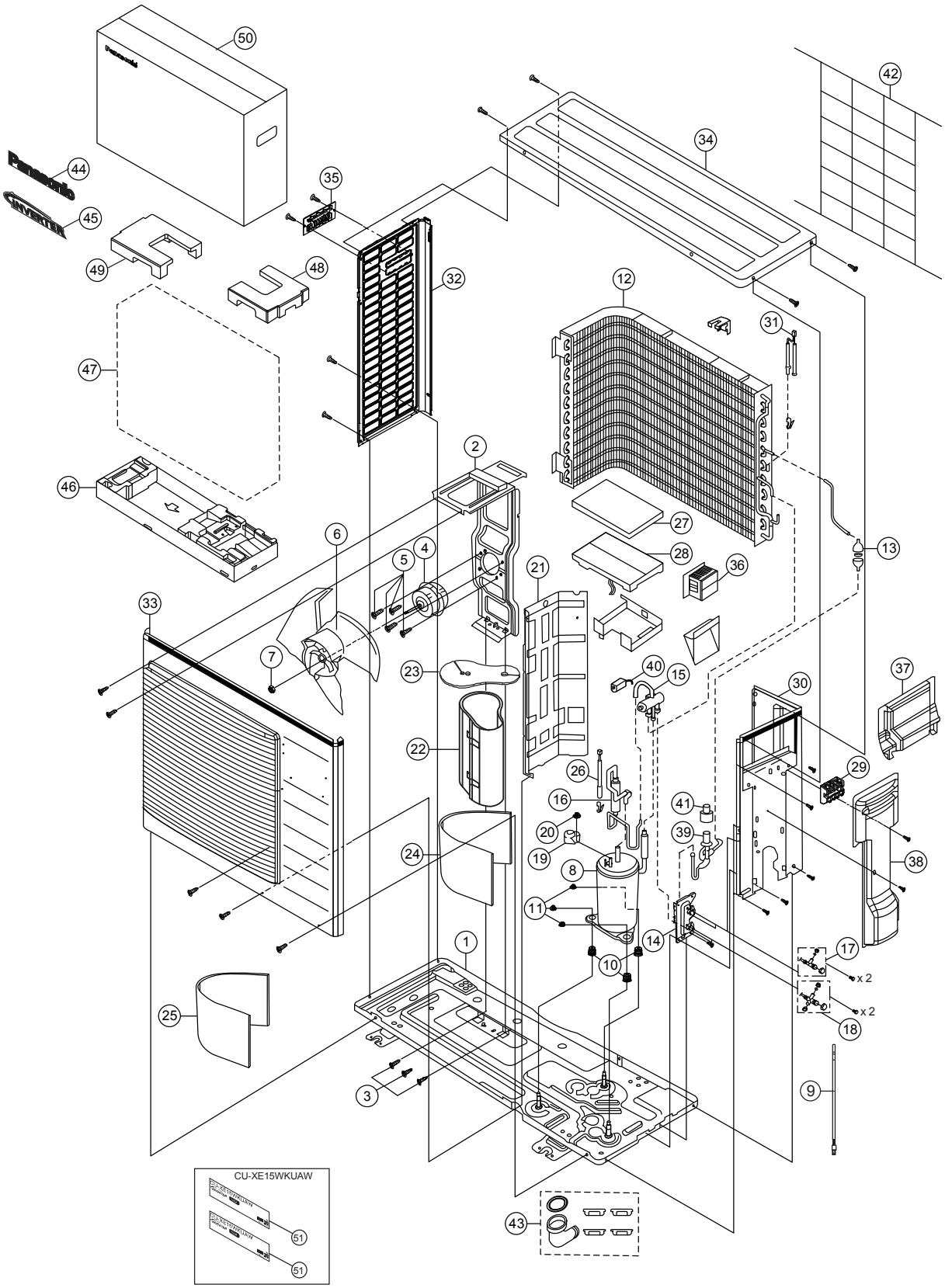

Note
The above exploded view is for the purpose of parts disassembly and replacement.
The non-numbered parts are not kept as standard service parts.

SAFETY PARTS	REF. NO.	PART NAME & DESCRIPTION	QTY.	CU-XE15WKUA	REMARKS
	1	CHASSIS COMPLETE	1	ACXD52K00130A	
	2	FAN MOTOR BRACKET	1	CWD541153	
	3	SCREW - FAN MOTOR BRACKET	3	CWH551217	
⚠	4	FAN MOTOR	1	L6CBYYYL0247	O
	5	SCREW - FAN MOTOR MOUNT	4	CWH551323	
	6	PROPELLER FAN ASSY	1	CWH03K1065	
	7	NUT - PROPELLER FAN	1	CWH56053J	
⚠	8	COMPRESSOR	1	5RD132XBA21	O
	9	CRANKCASE HEATER	1	CWA341072	
	10	ANTI - VIBRATION BUSHING	3	CWH50077	
	11	NUT - COMPRESSOR MOUNT	3	CWH561096	
	12	CONDENSER	1	ACXB32C00610	
	13	STRAINER	1	CWB111076	
	14	HOLDER COUPLING	1	CWH351228A	
	15	4-WAYS VALVE	1	CWB001057	
	16	DISCHARGE MUFFLER(4 W.VALVE)	1	CWB121047	
	17	2-WAYS VALVE (LIQUID)	1	CWB021400	
	18	3-WAY VALVE (GAS)	1	CWB011338	
	19	TERMINAL COVER	1	CWH171039A	
	20	NUT - TERMINAL COVER	1	CWH7080300J	
	21	SOUND PROOF BOARD	1	CWH151379	
	22	SOUND PROOF MATERIAL - COMP. BODY	1	CWG302950	
	23	SOUND PROOF MATERIAL - COMP. TOP	1	CWG302630	
	24	SOUND PROOF MATERIAL	1	CWG302632	
	25	SOUND PROOF MATERIAL	1	CWG302636	
⚠	26	SENSOR CO-COMP TEMP	1	CWA50C2343	O
	27	CONTROL BOARD COVER-TOP	1	CWH131333	
⚠	28	ELECTRONIC CONTROLLER - MAIN	1	ACXA73C61620R	O
⚠	29	TERMINAL BOARD ASSY	1	CWA28K1154	O
	30	CABINET SIDE PLATE CO. - RIGHT	1	CWE041732A	
⚠	31	SENSOR CO-AIR TEMP AND PIPE TEMP	1	CWA50C2710	O
	32	CABINET SIDE PLATE - LEFT	1	CWE041733A	
	33	CABINET FRONT PLATE CO.	1	CWE06K1101	
	34	CABINET TOP PLATE	1	CWE031131A	
	35	HANDLE	1	CWE161010	
⚠	36	REACTOR	1	G0C203J00003	
	37	CONTROL BOARD COVER	1	CWH131409	
	38	CONTROL BOARD COVER-COMPLETE	1	CWH13C1308	
	39	EXPANSION VALVE	1	ACXB05-00400	
⚠	40	V-COIL COMPLETE (4 WAY VALVE)	1	CWA43C2392	O
⚠	41	V-COIL COMPLETE (EXPENSION VALVE)	1	ACXA43C01520	O
	42	WIRE NET	1	CWD041155A	
	43	BAG-COMPLETE (L-TUBE)	1	ACXH82C00350	
	44	BADGE -PANASONIC	1	CWE373439	
	45	BADGE -INVERTER	1	CWE373441	
	46	BASE BOARD-COMPLETE	1	CWG62C1131	
	47	BAG	1	CWG861461	

SAFETY PARTS	REF. NO.	PART NAME & DESCRIPTION	QTY.	CU-XE15WKUA	REMARKS
	48	SHOCK ABSORBER (R)	1	CWG713218	
	49	SHOCK ABSORBER (L)	1	CWG713217	
	50	C.C.CASE	1	ACXG50-52141	
	51	MODEL LABEL	2	ACXF85-26680	

(NOTE)

- All parts are supplied from PAPAMY, Malaysia (Vendor Code: 00029488).
- “O” marked parts are recommended to be kept in stock.

20.2.3 CU-XE18WKUA CU-XE24WKUA

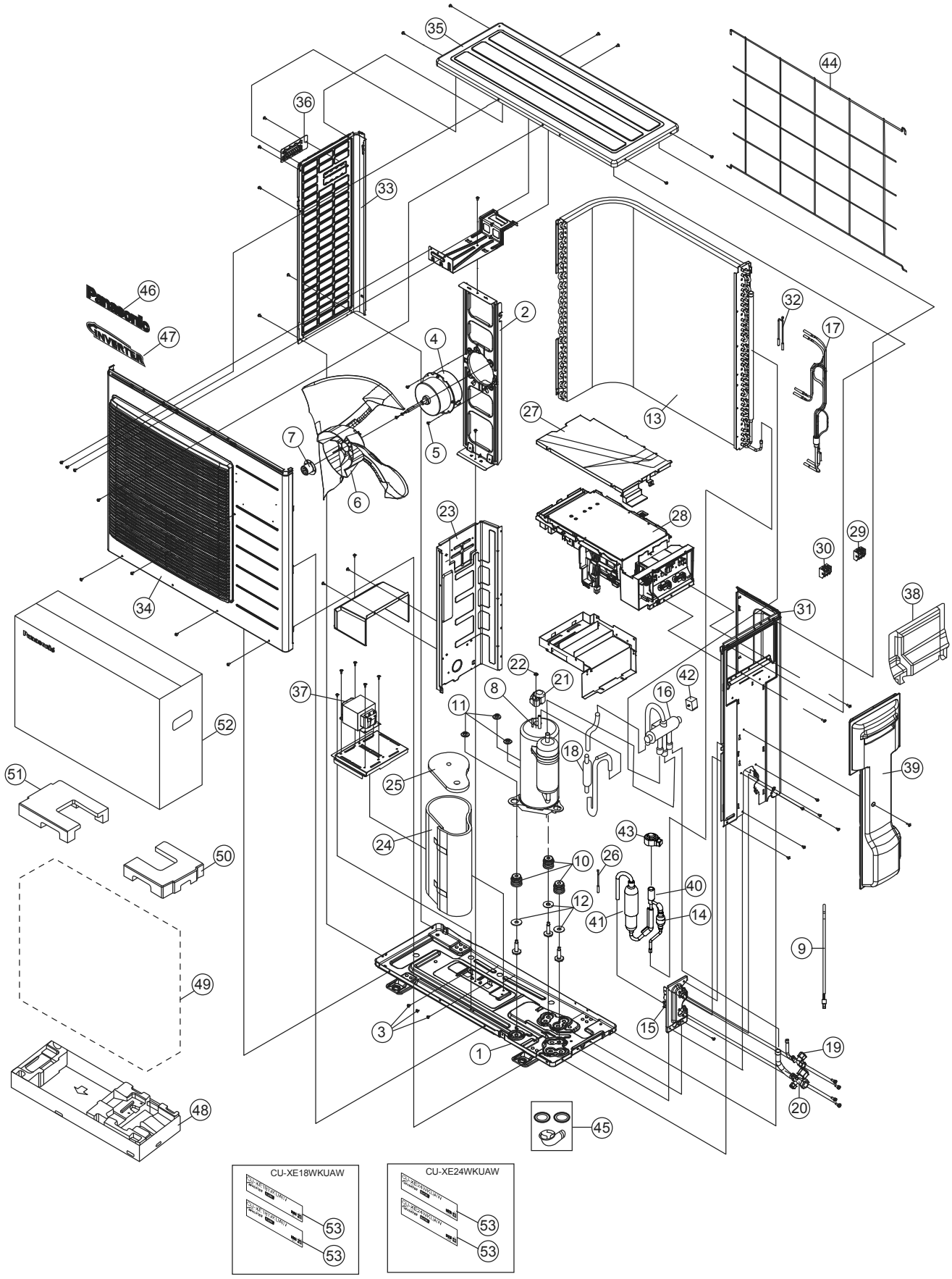

Note
The above exploded view is for the purpose of parts disassembly and replacement.
The non-numbered parts are not kept as standard service parts.

SAFETY PARTS	REF. NO.	PART NAME & DESCRIPTION	QTY.	CU-XE18WKUA	CU-XE24WKUA	REMARKS
	1	CHASSIS COMPLETE	1	ACXD52K03410A	←	
	2	FAN MOTOR BRACKET	1	CWD541127	←	
	3	SCREW - FAN MOTOR BRACKET	3	CWH551217	←	
⚠	4	FAN MOTOR	1	EHDS80CAC	←	O
	5	SCREW - FAN MOTOR MOUNT	4	CWH551323	←	
	6	PROPELLER FAN ASSY	1	CWH00K1006	←	
	7	NUT - PROPELLER FAN	1	CWH561092	←	
⚠	8	COMPRESSOR	1	5KD240XAF21-CAT01	←	O
	9	CRANKCASE HEATER	1	CWA341072	←	
	10	ANTI - VIBRATION BUSHING	3	CWH50055	←	
	11	NUT - COMPRESSOR MOUNT	3	CWH561049	←	
	12	PACKING	3	CWB81043	←	
	13	CONDENSER	1	ACXB32C18370	←	
	14	STRAINER	1	CWB111063	←	
	15	HOLDER COUPLING	1	CWH351228A	←	
	16	4-WAYS VALVE	1	CWB001057	←	
	17	CAPILLARY TUBE A'SSY	1	CWT01C6093	←	
	18	DISCHARGE MUFFLER(4 W.VALVE)	1	CWB121055	←	
	19	2-WAYS VALVE (LIQUID)	1	CWB021434	←	
	20	3-WAY VALVE (GAS)	1	CWB011364	CWB011363	
	21	TERMINAL COVER	1	CWH171039A	←	
	22	NUT - TERMINAL COVER	1	CWH7080300J	←	
	23	SOUND PROOF BOARD	1	CWH151197	←	
	24	SOUND PROOF MATERIAL - COMP. BODY	1	CWG302586	←	
	25	SOUND PROOF MATERIAL - COMP. TOP	1	CWG302246	←	
⚠	26	SENSOR CO-COMP TEMP	1	CWA50C2689	←	O
	27	CONTROL BOARD COVER-TOP	1	CWH131333	←	
⚠	28	ELECTRONIC CONTROLLER - MAIN	1	ACXA73C61630R	ACXA73C61640R	O
⚠	29	TERMINAL BOARD ASSY	1	CWA28K1277	←	O
⚠	30	TERMINAL BOARD ASSY	1	CWA28K1076J	←	O
	31	CABINET SIDE PLATE CO.	1	CWE041488A	←	
⚠	32	SENSOR CO-AIR TEMP AND PIPE TEMP	1	CWA50C2710	←	O
	33	CABINET SIDE PLATE	1	CWE041490A	←	
	34	CABINET FRONT PLATE CO.	1	CWE06K1070	←	
	35	CABINET TOP PLATE	1	CWE031131A	←	
	36	HANDLE	1	CWE161010	←	
⚠	37	REACTOR	1	G0C452J00002	←	O
	38	CONTROL BOARD COVER	1	CWH131332	←	
	39	CONTROL BOARD COVER-COMPLETE	1	CWH13C1210	←	
	40	EXPANSION VALVE	1	CWB051029	←	
	41	RECEIVER	1	CWB14030	←	
⚠	42	V-COIL COMPLETE (4 WAY VALVE)	1	CWA43C2392	←	O
⚠	43	V-COIL COMPLETE (EXPENSION VALVE)	1	ACXA43C01520	←	O
	44	WIRE NET	1	CWD041128A	←	
	45	BAG-COMPLETE (L-TUBE)	1	ACXH82C00350	←	
	46	BADGE -PANASONIC	1	CWE373439	←	

SAFETY PARTS	REF. NO.	PART NAME & DESCRIPTION	QTY.	CU-XE18WKUA	CU-XE24WKUA	REMARKS
	47	BADGE -INVERTER	1	CWE373441	←	
	48	BASE BOARD-COMPLETE	1	ACXG62C01990	←	
	49	BAG	1	CWG861154	←	
	50	SHOCK ABSORBER (R)	1	CWG712879	←	
	51	SHOCK ABSORBER (L)	1	CWG712880	←	
	52	C.C.CASE	1	ACXG50-53221	←	
	53	MODEL LABEL	2	ACXF85-26690	ACXF85-26700	

(NOTE)

- All parts are supplied from PAPAMY, Malaysia (Vendor Code: 00029488).
- “O” marked parts are recommended to be kept in stock.

Printed in Malaysia
FB0120-0