# Panasonic®

**Up to 1 hour combustible assemblies**
**FlexDamper® Ceiling Radiation Damper**
PC-RD06C6 installation instructions

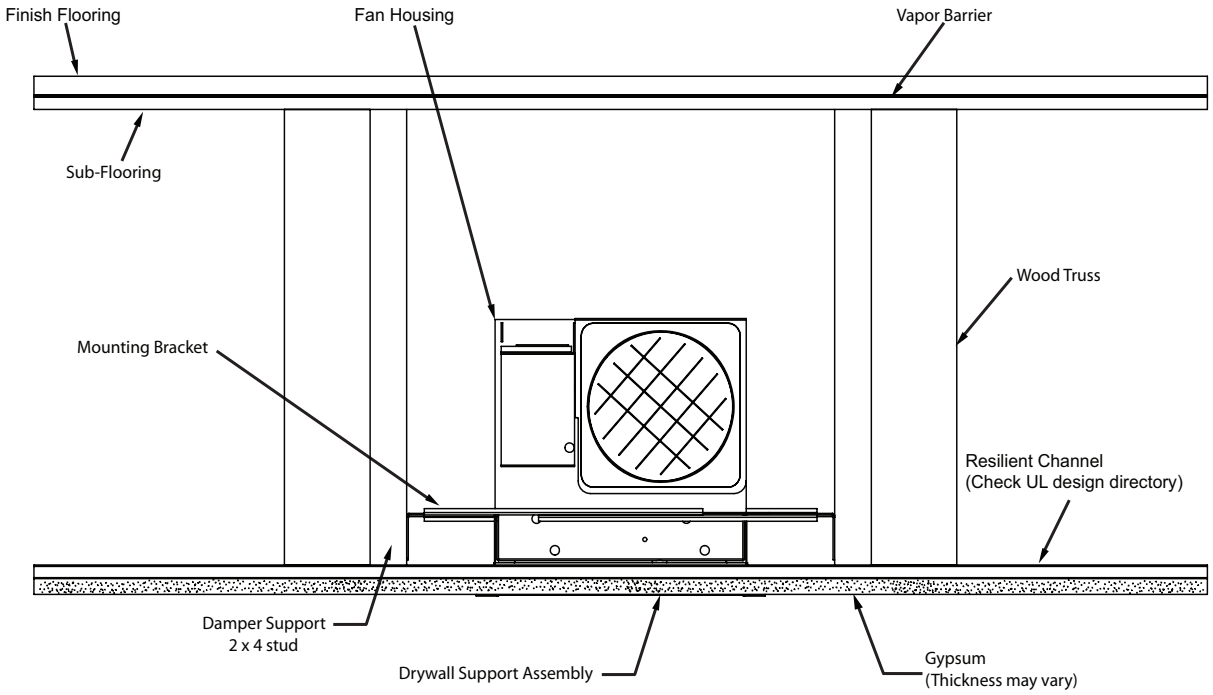


**Figure 1**

For fan models:
**WhisperGreen Select: FV-0511VK2, FV-0511VKL2, FV-0511VKS2, FV-0511VKSL2, FV-1115VK2, FV-1115VKL2 FV-0511VK3, FV-0511VKL3, FV-0511VKS3, FV-0511VKS3S, FV-0511VKSL3, FV-0511VKSL3K, FV-1115VK3, FV-1115VKL3**
**WhisperCeiling DC: FV-0511VQ1, FV-1115VQ1, FV-0511VQL1, FV-1115VQL1**
**WhisperSense DC: FV-0511VQC1, FV-0511VQCL1**
**WhisperFit DC: FV-0511VF1, FV-0511VFC1, FV-0511VFL1**
**WhisperValue DC: FV-0510VS1, FV-0810VSS1, FV-0510VSL1, FV-0810VSSL1, FV-0510VSCL1, FV-0510VSC1, FV-0510VSAB1 (FV-0510VSA1 + FV-0510VSB1), FV-0510VSCAB1 (FV-0510VSA1 + FV-0510VSCB1), FV-0810VSSAB1 (FV-0510VSA1 + FV-0810VSSB1)**

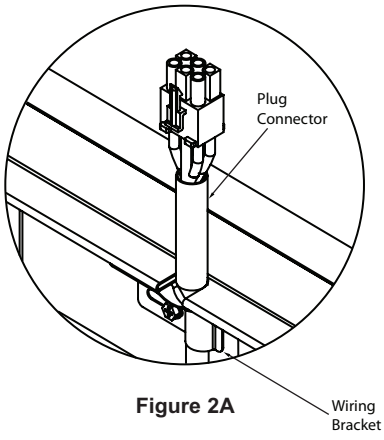


**Figure 2A**

1. Position the ceiling radiation damper on the inlet side of the fan such that the holes in the damper mounting flanges line up with the holes in the flange of the fan housing. Secure the damper to the fan housing using four #10-32 screws and nuts supplied.

2A. For a damper used with a fan requiring a plug connector to pass through the damper, secure the plug connector using the wiring bracket and #8 course threaded screw supplied. (See Figure 2A) If the plug connector cannot reach through the damper to the grill plug attachments, release the clips holding the wiring inside the fan with a Phillips-Head screwdriver. Make sure the wire lead or plug connector does not interfere with the closing of the damper.

2B. For a damper used with a fan that does not require a plug connector, secure the wiring bracket to the damper frame using the #8 course threaded screw supplied. Make sure the wiring bracket covers the notch in the frame and does not interfere with the closing of the damper. (See Figure 2B)

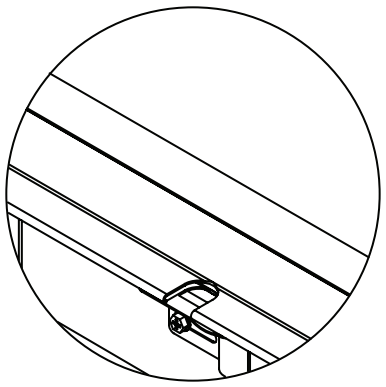

**Figure 2B**

3. Prior to installing the damper/fan, damper supports need to be installed in the ceiling assembly (See Figure 1 and Figure 5). Four damper supports made from 2x4's cut to the truss height need to be installed, centered around the damper/fan location. The damper supports need to be spaced 11-9/16" (294) on center. The bottom of the damper supports must be flush with the bottom of the trusses. Each damper support must be fastened to the truss members with a minimum 2" (51) long #8 wood screws at a minimum of two places.



Information is correct at time of printing. However, we reserve the right to make changes without notice. Note: All dimensions are shown in () millimeters.

4. With the damper secured to the fan housing, attach the supplied mounting brackets. Position the mounting brackets under the damper mounting flanges or under the fan housing flange as required. Position the slot so it aligns with the holes in the fan housing and/or the holes in the damper mounting flanges (See Figure 3). The brackets can be adjusted to fit between the damper supports. Once the brackets are adjusted, attach them to the flange of the fan housing using four #10-32 screws and nuts supplied. A minimum of two fasteners per side is required.

5. Fasten the support brackets to the damper supports with a minimum 2" (51) long #8 wood screws at a minimum of 1 place per bracket. Be sure the bottom of the damper/fan will be flush with the bottom of the gypsum once it is installed. Locate the damper/fan based on the presence of a resilient channel and gypsum thickness. Please refer to the appropriate UL floor/ceiling or roof/ceiling design for reference.

6. Once the gypsum is in place install the drywall support assembly (See Figure 4) to the damper using the #8 course threaded screws supplied at four places minimum. The drywall support assembly must be installed snug to the bottom of the gypsum so the gypsum is resting on the drywall support assembly.

7. Install the fan grill per the Panasonic Installation Instructions.

8. For other installation details see the Panasonic Installation Instructions.

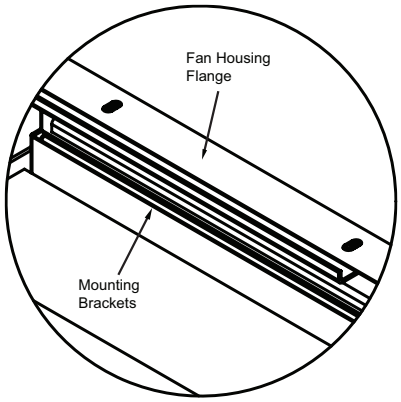


**Figure 3**

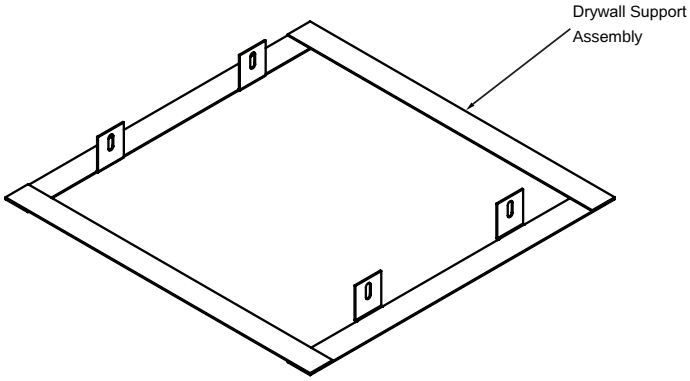


**Figure 4**

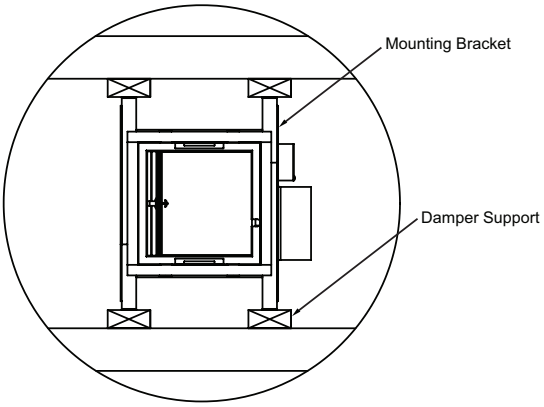


**Figure 5**

For installation in the following UL rated wood truss floor-ceiling designs:

**L521, L528, L546, L558, L562, L574, L576, L581, L583, L585, and M509.**

For installation in the following UL rated wood truss roof-ceiling designs:

**P522, P533, P538, P545, and P547.**

**For horizontal mount only.**

**Certified to UL555C.**



Information is correct at time of printing. However, we reserve the right to make changes without notice. Note: All dimensions are shown in () millimeters.

# Panasonic®

**Up to 3 hour non-combustible assemblies**
**FlexDamper® Ceiling Radiation Damper**
PC-RD06C6 installation instructions

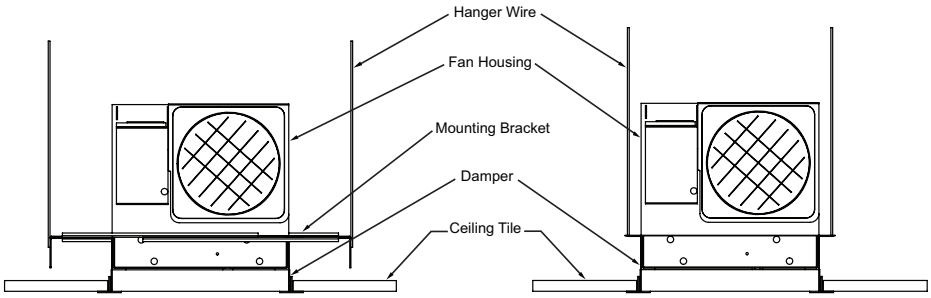


**Figure 1A** **Figure 1B**

For fan models:

**WhisperGreen Select: FV-0511VK2, FV-0511VKL2, FV-0511VKS2, FV-0511VKSL2, FV-1115VK2, FV-1115VKL2 FV-0511VK3, FV-0511VKL3, FV-0511VKS3, FV-0511VKS3S, FV-0511VKSL3, FV-0511VKSL3K, FV-1115VK3, FV-1115VKL3**

**WhisperCeiling DC: FV-0511VQ1, FV-1115VQ1, FV-0511VQL1, FV-1115VQL1**

**WhisperSense DC: FV-0511VQC1, FV-0511VQCL1**

**WhisperFit DC: FV-0511VF1, FV-0511VFC1, FV-0511VFL1**

**WhisperValue DC: FV-0510VS1, FV-0810VSS1, FV-0510VSL1, FV-0810VSSL1, FV-0510VSCL1, FV-0510VSC1, FV-0510VSAB1 (FV-0510VSA1 + FV-0510VSB1), FV-0510VSCAB1 (FV-0510VSA1 + FV-0510VSCB1), FV-0810VSSAB1 (FV-0510VSA1 + FV-0810VSSB1)**

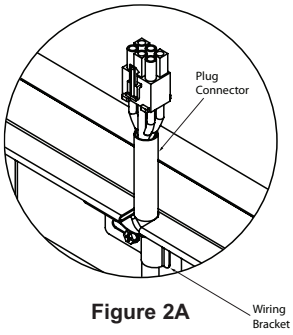


**Figure 2A**

1. Position the ceiling radiation damper on the inlet side of the fan such that the holes in the damper mounting flanges line up with the holes in the flange of the fan housing. Secure the damper to the fan housing using the four #10-32 machine screws/nuts supplied.

2A. For a damper used with a fan requiring a plug connector to pass through the damper, secure the plug connector using the wiring bracket and #8 course threaded screw supplied. (See Figure 2A) If the plug connector cannot reach through the damper to the grill plug attachments, release the clips holding the wiring inside the fan with a Phillips-Head screwdriver. make sure the wire lead or plug connector does not interfere with the closing of the damper.

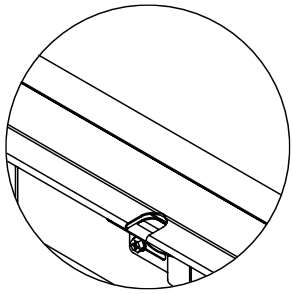

**Figure 2B**

2B. For a damper used with a fan that does not require a plug connector, secure the wiring bracket supplied to the damper frame using the supplied #8 course threaded screw supplied. Make sure the wiring bracket covers the notch in the frame. (See Figure 2B).

3. With the damper secured to the fan housing, the assembly can be attached to the structure above using the holes in the fan housing flange or the supplied mounting brackets. If the mounting brackets are used, position the mounting brackets under the damper mounting flanges or under the fan housing flange as required. Position the slot so it aligns with the holes in the fan housing and/or the holes in the damper mounting flanges (See Figure 3). If the damper/fan is being attached to the adjacent structure, the brackets must be used and adjusted to fit accordingly. If the damper/fan is supported from structure above, the brackets should be adjusted so the ends of the brackets align accordingly. Once the brackets are adjusted, attach them to the flange of the fan housing using four #10-32 screws and nuts supplied. A minimum of two fasteners per side is required.

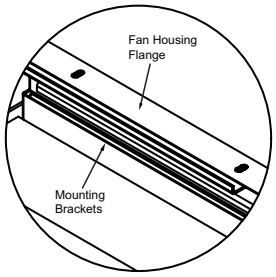


**Figure 3**

4. The ceiling penetration should be located within ceiling tiles or panels without necessitating cuts in the ceiling suspension main runners or cross tees. If required, a maximum of one runner or cross tee may be cut to enable proper damper location and installation. Each cut end shall be supported by a min. 12 swg (2.7) vertical hanger wire. The opening in the ceiling should be the same size as the outside of the damper frame.

5. Position the damper/fan assembly such that the bottom edge of the damper is flush with the finished surface of the ceiling. Attach the damper/fan assembly to the structure above or adjacent to it. If the damper/fan is being attached to the assembly above, a minimum of 12 swg. (2.7) hanger wire must be used. A minimum of two hanger wires on two opposite sides are required. The hanger wires can be attached directly to the fan housing flange or to the ends of the mounting brackets. If the damper/fan assembly is being directly mounted to the adjacent structure, a minimum #8 (M4) sheet metal screws or 1/2" dia. bolts/nuts must be used. If necessary, a min. 1/2" wide flange is to be attached to the damper using a minimum #8 (M4) sheet metal screw, 3/16" pop rivets, welds or bolts at 6" (152) o.c. maximum. A minimum of 2 connections per side is required.

6. For other installation details see Panasonic Installation Instructions.

**For horizontal mount only.**

**Certified to UL555C.**

CLASSIFIED SEE DETAILS ON UL CLASSIFICATION MARKING ON ENCLOSED PRODUCT CLASSIFIED

Intertek



Information is correct at time of printing. However, we reserve the right to make changes without notice. Note: All dimensions are shown in () millimeters..

# Panasonic®

## PC-RD06C6 wire mesh installation instructions

1. Start with damper and wire mesh as shown in Figure 1. Grab wire mesh and place inside of damper making sure to insert 2nd opening on mesh grid into the tabs closest to the damper curtain. Refer to "Detail of wire mesh placement" detail view.

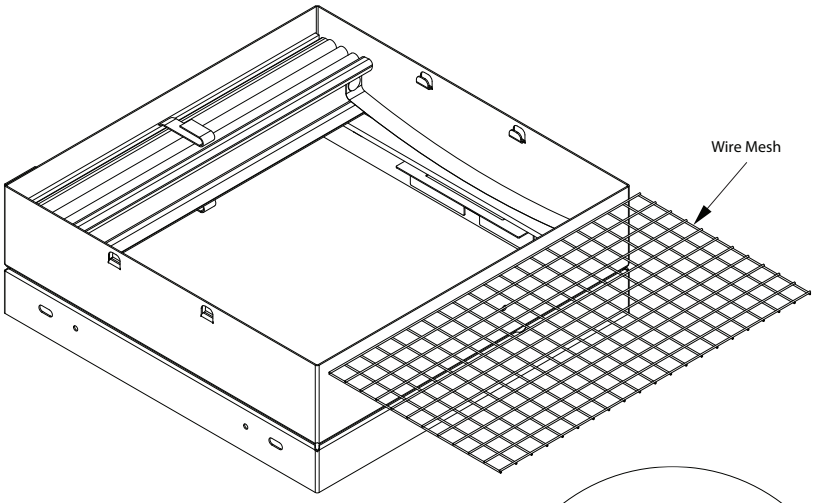


**Figure 1**

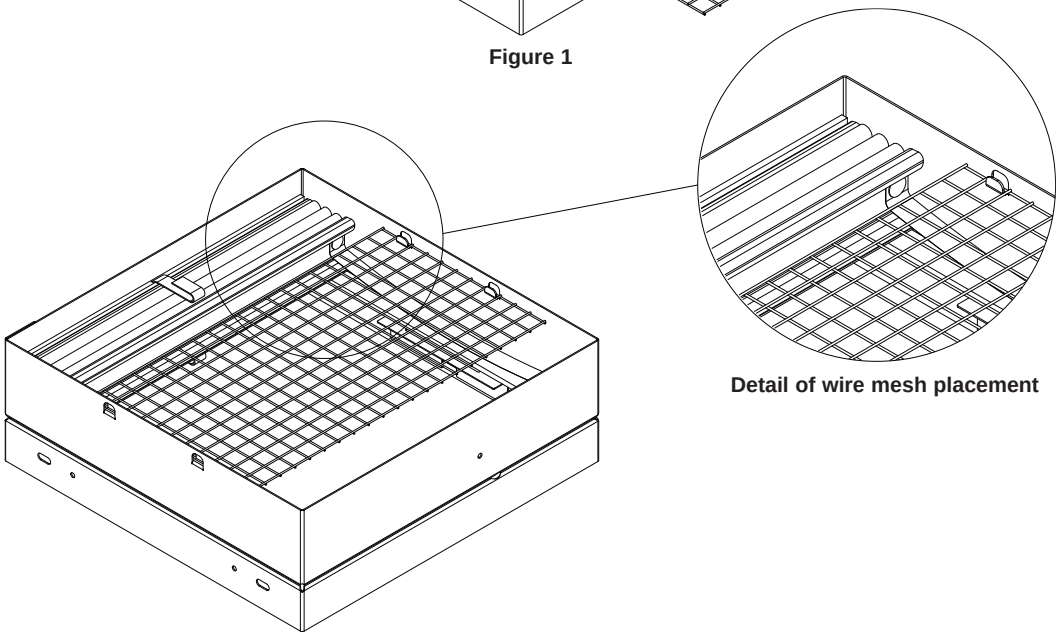

**Wire mesh placement**



**Detail of wire mesh placement**

2. Once the mesh has been correctly placed into the frame, pinch tabs to secure wire mesh in place as shown in "Detail of wire mesh & tabs". Do this for all 4 tabs.

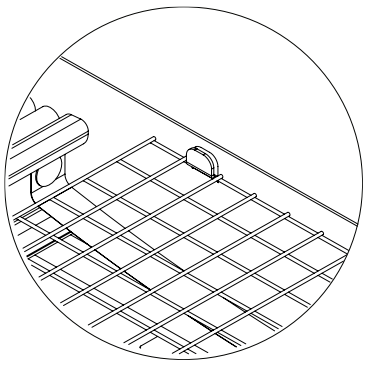

**Detail of wire mesh and tabs**

CLASSIFIED SEE DETAILS ON UL CLASSIFICATION MARKING ON ENCLOSED PRODUCT CLASSIFIED

Intertek

LISTING SERVICE

PC-RD06C6 Wire Mesh Installation (1/1) May 2025

Information is correct at time of printing. However, we reserve the right to make changes without notice. Note: All dimensions are shown in () millimeters.