Panasonic

WhisperComfort® 60 Energy Recovery Ventilator

WhisperComfort® 60

FV-06VE1





CODE COMPLIANCE

- Can be used to comply with the latest green building codes and standards
- Product is HVI certified for energy recovery and sound
- Static pressure access ports make it easy for raters to verify airflow for ASHRAE 62.2 compliance
- Suitable for new/remodel, single-family/multi-family, energy efficient projects

PERFORMANCE

- Sensible Recovery Efficiency 70% at 0°C (32°F)
- Total Recovery Efficiency 60% at 35°C (95°F)
- Multi-speed selector (20 to 50 CFM) provides customizable airflow
- Occupant controllable Boost function moves fan speed to 60 CFM when activated
- Engineered for use in virtually any North America Climate Zone
- High efficiency capillary core recovers heat and helps maintain desired moisture levels inside
- Two (2) powerful DC Panasonic ECM motors provide quiet and efficient airflow
- MERV 13 replaceable filters for superior air filtration
- Core material permeated with anti-mold treatment to help prevent mold
- Separate control of supply and exhaust airflow
- New (Optional) WhisperVent™ Wall Cap allows for supply and exhaust air through one building penetration - up to 100 CFM each side

INSTALLATION

- Easy installation with 2 duct structure (Two 4" or 5" outlets; exhaust & supply)
- Two mounting options – wall or ceiling (brackets included)
- Static pressure access ports assist with airflow verification
- New larger WhisperVent™ Wall Cap conveniently allows both exhaust and supply airflow through a single hole in the building envelope (optional accessory, sold separately)

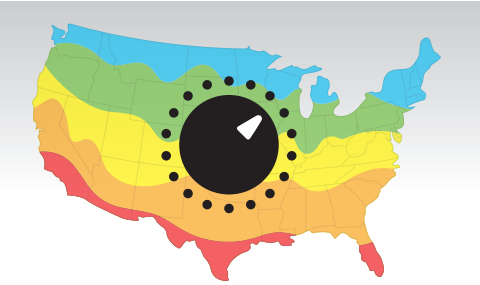

COST EFFECTIVE, CODE COMPLIANT ERV FOR ANY CLIMATE ZONE

WhisperComfort® 60 is a compact yet powerful, high performance, high efficiency Energy Recovery Ventilator (ERV) that's designed to meet ASHRAE 62.2 requirements in a cost-effective way. This unique ERV is engineered for total versatility and installation flexibility, in virtually any climate zone. Built-in controls minimize the time it takes to set desired airflow, as well as verify and maintain performance. WhisperComfort® 60 allows you to simply design and specify your ventilation system requirements, improve IAQ and reduce ventilation costs on new construction or remodeling projects.

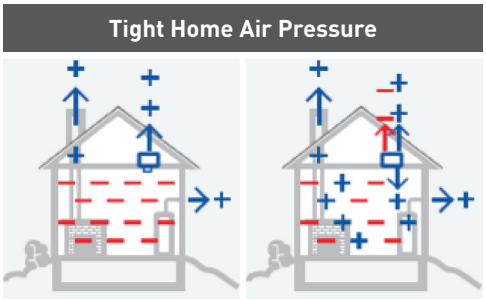

WITHOUT ERV WITH ERV

BALANCED VENTILATION

Tightly built homes and buildings utilizing exhaust-only fans can create negative pressure. The WhisperComfort® 60 ERV solves this problem by supplying air to replace exhausted air, balancing air pressure within the home.

WhisperComfort® 60 uses a 2-duct structure (Two 4" or 5" outlets) to exhaust stale air and supply fresh air. Panasonic WhisperComfort® 60 ERV's continuous run helps remove moist, stale air and replace it with fresh air. Air changes per hour have been shown to reduce virus and bacteria counts in the air.

WhisperComfort® 60 can be ceiling or wall mounted, does not require connection to the Central HVAC or the addition of a condensation line. This allows it to be installed in many places throughout the home to meet IAQ, health and comfort needs.

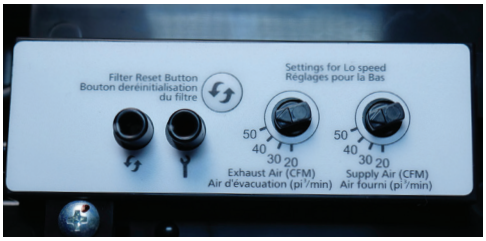

Multi-Speed Selector

MULTI-SPEED SELECTOR

WhisperComfort® 60 includes a built-in multi-speed selector that provides the unique ability to select the required supply (20-50 CFM) and exhaust airflow (20-50 CFM), with the simple turn of a dial. This truly customizable airflow capability can be used to create balanced, positive, or negative pressure within the home.



MERV 13 Filter - FV-FL1306VE1

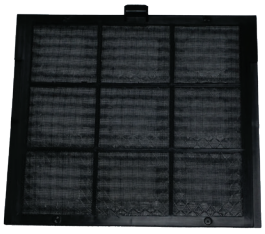

Reusable Return Air Dust Filter

FILTERS AND MAINTENANCE

WhisperComfort® 60 has two filters that clean the exhaust and supply air before passing through the ERV core, extending the life of the core. A replaceable Merv 13 filters incoming air, while a reusable return air dust filter protects the core from outgoing stale air. A convenient indicator light will help inform the homeowner when it's time to check and clean the filters. Both filters should be vacuumed with a soft brush attachment every 2-3 months or as needed, and the supply air filter should be inspected every 90 days and replaced every 6 months to maintain the ERV's peak performance.

ECM MOTOR TECHNOLOGY

WhisperComfort® 60 uses two (2) DC Panasonic ECM brushless motors for quiet and efficient ventilation. Both ECM motors are rated for continuous run and are totally enclosed to ensure long-life and quiet operation. Each motor is equipped with a thermal cutoff fuse.

ENERGY EXCHANGE CORE

Indoor and outdoor air pass through Panasonic's patented energy exchange core designed to transfer heat and moisture. This process tempers supply air while helping to maintain desired moisture levels inside. The core's high latent energy (moisture) transfer makes WhisperComfort® 60 ideal for use in virtually any climate zone, as it helps expel moisture during incidences of high relative humidity (RH) and helps return moisture back inside during the winter for a healthier, more comfortable living environment. Core material is permeated with an anti-mold treatment to help prevent mold in the home.

INSTALLATION

Mounting:
WhisperComfort® 60 is UL listed for ceiling or wall mount installation. It measures 14" wide and fits between joists 16" on center. Adjustable brackets and screws are provided to secure the unit to the joist on 4 corners.

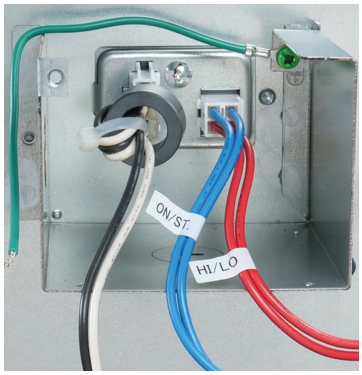

Wiring:
Power consumption is 39 Watts at 60CFM with a power rating of 120/60 V/Hz. Bring house power to the unit junction box and use 3 wires to connect the power supply wires. In addition, the junction box contains 2 red wires and 2 blue wires for switch connections: 2 Red Wires: 60 CFM Boost (Hi-Lo) Function & 2 Blue Wires: Standby Function

Duct:
Insulated duct is required. WhisperComfort® 60 is easy to install, featuring a 2 duct structure (Two 4" or 5" outlets; exhaust and supply).

OPTIONAL ACCESSORIES

Swidget 20-40-60 Timer Switch (S16008WA) with an IAQ sensor insert (WI008UWA) are ideal to control the 60CFM Boost function.

Swidget Auxiliary Switch (S16009WA) with a Wi-Fi control insert (WI000UWA) are ideal to control the Standby function.



20-40-60 Timer Switch



IAQ Sensor



Auxiliary Switch



Wi-Fi Control Insert

The WhisperVent™ Wall Cap is designed for use with WhisperComfort® 60, as well as the Intelli-Balance® 100 ERV's. This optional accessory simplifies installation with both exhaust and supply airflow through a single 7.5" penetration in the building envelope. The dividers of the unique Y shaped chamber and the wall cap help prevent cross contamination; with air flow rated up to 100 CFM per side.

Unlike traditional installations where two wall caps were required, the WhisperVent™ Wall Cap accessory with Expanded Polystyrene adapter conveniently allows both exhaust (from the one side) and supply (from the second side), through a single 7.5" penetration in the building envelope.

WhisperVent™ Wall Cap

FV-WC10VE1

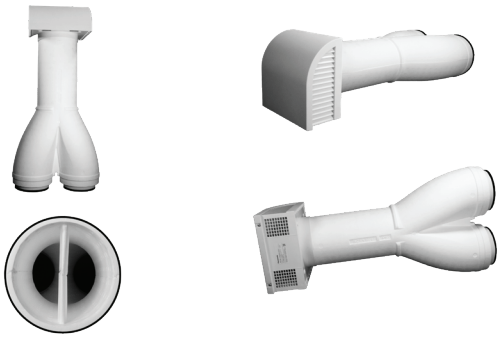

Pressure drop curve: FV-WC10VE1 WhisperVent™ Wall Cap

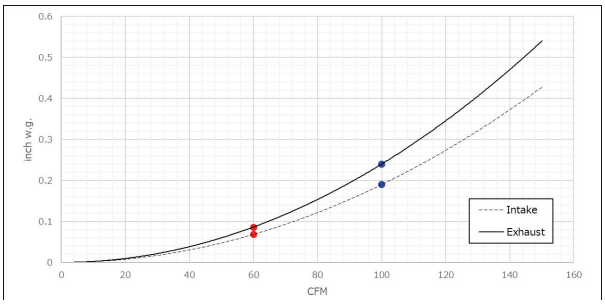

FV-WC10VE1		
Pressure drops intake (inch w.g.)*	60	0.7
	100	0.19
Pressure drops exhaust (inch w.g.)*	60	0.09
	100	0.24

*measured value

Performance Specifications: WhisperComfort® 60 FV-06VE1								
Mode	Supply Temperature		Net Air Flow		Power Consumption (w)	Sensible Recovery Efficiency	Apparent Sensible Recovery Efficiency	Net Moisture Transfer
	°F	°C	L/s	CFM				
Heating	32	0	9	20	9	70%	73%	0.7
	32	0	28	60	39	60%	63%	0.5
Cooling	95	35	13	27	12	Total Recovery Efficiency		
						60%		

Sound Specifications: WhisperComfort® 60 FV-06VE1							
	SP	CFM	Sones	CFM	Sones	CFM	Sones
4" Duct	0.1"	60	2.5	50	1.5	40	0.9
	0.25"	54	2.5	43	2.0	30	1.2

WhisperComfort® 60

FV-06VE1

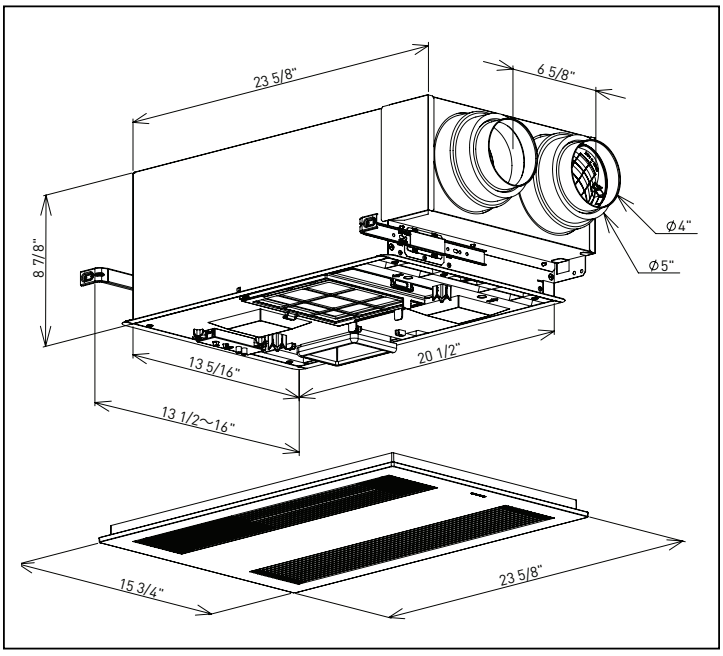

Panasonic Canada Inc.
5770 Ambler Drive
Mississauga, Ontario L4W 2T3
na.panasonic.com/ca/ventilation

For Order Information
PHONE: 1-800-669-5165
EPSorders@ca.panasonic.com

Design and specifications subject to change without notice.

IAQ25243SS
R2