WhisperComfort® 60 *Energy Recovery Ventilator*

FV-06VE1

Specification Submittal Data / Panasonic ERV

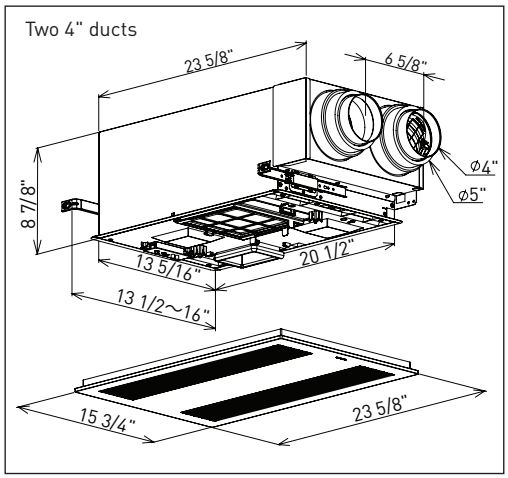

FV-06VE1

Optional Exterior WhisperVent™ Wall Cap (see next page)

Description

UL Listed ceiling or wall mount Energy Recovery Ventilator provides a tempered fresh air supply and balanced exhaust air flow to maintain neutral pressure throughout the home. Panasonic's WhisperComfort® 60 is not for use in a bathroom.

Motor/Blower:

- ERV supply and exhaust rates shall be manually adjustable for 20 - 30 - 40 - 50 CFM
- Two fully enclosed Panasonic DC Electronic Commutated Motors (ECM) rated for continuous run.
- ERV shall have Hi / Lo speed occupant boost capability
- Power rating shall be 120 volts and 60 Hz.
- Two highly efficient blower wheels running on two motors for lower power consumption and decreased noise.
- Motors are equipped with thermal cut-off fuse control.

Housing:

- Corrosion Resistant and Galvanized steel body.
- 2 Pressure ports allow for easy airflow verification.
- Dual 4" intake and exhaust ducts. 5" Duct connections are also available.
- Built in backdraft damper on exhaust duct.
- Filters on supply and exhaust air extend the life of the ERV core.
- Expandable mounting bracket up to 16" on center.

Grille:

- Attractive design using Polypropylene material.
- Attaches directly to housing with torsion springs.

Warranty:

- DC Motors: 6 years from original purchase date
- All Parts: 3 Years from original purchase date.

Architectural Specifications:

ERV shall be ceiling or wall mount type with built-in speed selectors for both Supply and Exhaust air, select from 20/30/40/50 CFM. ERV shall have 60 CFM gross exhaust airflow and 60 CFM net supply airflow at 0.1" w.g. in accordance with HVI 916 standards. ERV shall be 2.5 sones or less at 60 CFM in accordance with HVI 915 standards. ERV shall have Hi/Lo Speed Occupant Controlled Boost Capability. Power consumption shall be no greater than 39 watts at 0.1" w.g. static pressure. Sensible Recovery Efficiency for heating shall be no less than 70% at 20 CFM net air flow at 0°C (32°F) as tested in accordance with CSA C439-18. Total Recovery Efficiency for cooling shall be no less than 60% at 27 CFM net air flow under 35°C [95°F]. The supply port damper shall close when outdoor temperatures are < -10°C [14°F] to prevent freezing of the core. The (2) motors shall be totally enclosed DC brushless motors rated for continuous run. Power rating shall be 120v/60Hz. Duct diameters shall be no less than 4". ERV can be used to comply with ASHRAE 62.2, LEED, IAP, California Title-24, and WA Energy Code Credits.

Maintenance:

MERV 13 filter included; replacements available

ERV Core Technology:

- Indoor and outdoor air passes through Panasonic's capillary core technology. This process tempers supply air while transferring moisture and energy.
- Built in Frost Prevention Mode prevents the core from freezing. Frost Prevention Mode is free of interaction and operates without intervention.

Performance Specifications : WhisperComfort® 60 FV-06VE1

Mode	Supply Temperature		Net Air Flow		Power Consumption (w)	Sensible Recovery Efficiency	Apparent Sensible Recovery Efficiency	Net Moisture Transfer
	°F	°C	L/s	CFM				
Heating	32	0	9	20	9	70%	73%	0.7
	32	0	28	60	39	60%	63%	0.5
Cooling	95	35	13	27	12	Total Recovery Efficiency		
						60%		

Sound Specifications: WhisperComfort® 60 FV-06VE1

	SP	CFM	Sones	CFM	Sones	CFM	Sones
4" Duct	0.1"	60	2.5	50	1.5	40	0.9
	0.25"	54	2.5	43	2.0	30	1.2

For complete Installation Instructions visit **na.panasonic.com/ca/ventilation**

Model	Quantity	Comments	Project:
			Location:
			Architect:
			Engineer:
			Contractor:
			Submitted by:
			Date:

Panasonic Canada Inc.
5770 Ambler Drive
Mississauga, Ontario L4W 2T3

na.panasonic.com/ca/ventilation

c UL us

Panasonic

Specification Submittal Data / Panasonic ERV
(Continued)

Optional Accessories

WhisperVent™ Wall Cap

Optional Exterior Wall Cap

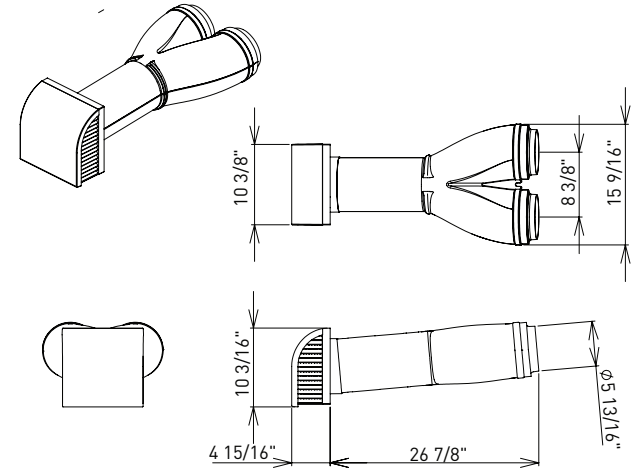

Pressure drop curve: FV-WC10VE1 WhisperVent™ Wall Cap

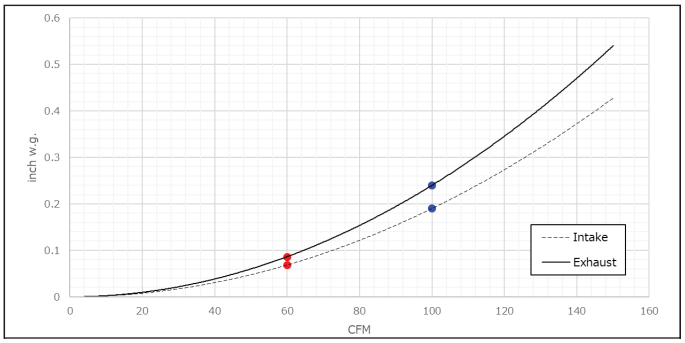

FV-WC10VE1		
Pressure drops intake (inch w.g.)*	60	0.7
	100	0.19
Pressure drops exhaust (inch w.g.)*	60	0.09
	100	0.24

*measured value

Exterior Wall Cap
FV-WC10VE1 polypropylene wall cap with polystyrene adaptor allows both exhaust (from the right) and supply (from the left) airflow through a 7.5" hole in the building envelope. The dividers inside the bottom portion of the Y shape chamber and the new wall cap help prevent cross contamination.

For complete Installation Instructions visit **na.panasonic.com/ca/ventilation**

Model	Quantity	Comments	**Project:**
			Location:
			Architect:
			Engineer:
			Contractor:
			Submitted by:
			Date:

Panasonic Canada Inc.
5770 Ambler Drive
Mississauga, Ontario L4W 2T3

na.panasonic.com/ca/ventilation

c UL us

Panasonic