# 21. Exploded View and Replacement Parts List

## *21.1 Indoor Unit*

### 21.1.1 CS-RE9SKUA CS-RE12SKUA

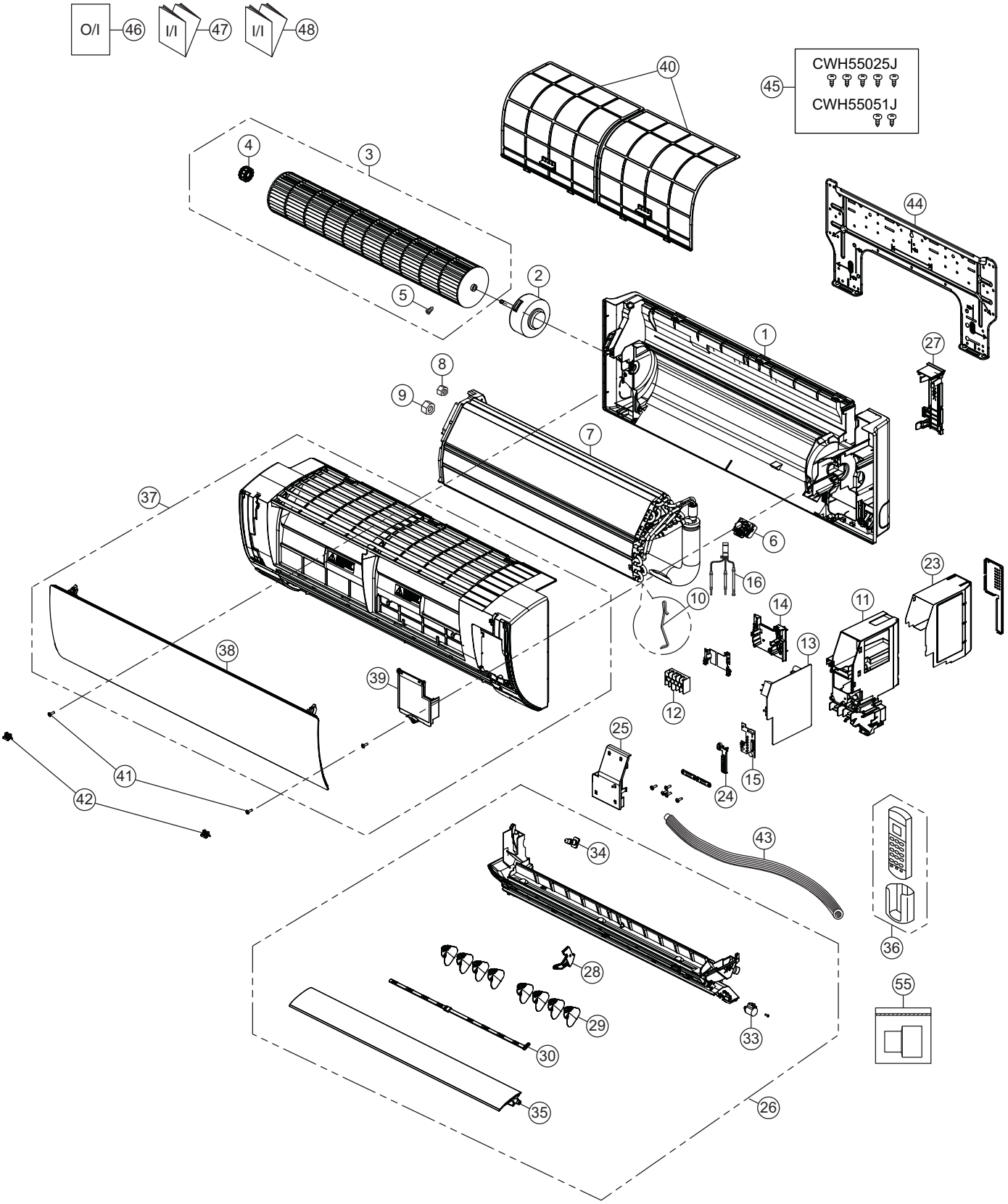


Note
The above exploded view is for the purpose of parts disassembly and replacement.
The non-numbered parts are not kept as standard service parts.

| SAFETY | REF. NO. | PART NAME & DESCRIPTION | QTY. | CS-RE9SKUA | CS-RE12SKUA | REMARK |
|---|---|---|---|---|---|---|
| | 1 | CHASSIS COMPLETE | 1 | CWD50C1633 | ← | |
| ⚠ | 2 | FAN MOTOR | 1 | L6CBYYYL0055 | ← | O |
| | 3 | CROSS - FLOW FAN COMPLETE | 1 | CWH02C1076 | ← | |
| | 4 | BEARING ASSY | 1 | CWH64K1010 | ← | O |
| | 5 | SCREW - CROSS-FLOW FAN | 1 | CWH551146 | ← | |
| | 6 | PARTICULAR PIECE | 1 | CWD933067 | ← | |
| | 7 | EVAPORATOR | 1 | ACXB30C00800 | ACXB30C00810 | |
| | 8 | FLARE NUT (LIQUID) | 1 | CWT251048 | ← | |
| | 9 | FLARE NUT (GAS) | 1 | CWT251049 | CWT251032 | |
| | 10 | CLIP FOR SENSOR | 1 | CWH321085 | ← | |
| | 11 | CONTROL BOARD CASING | 1 | CWH102605A | ← | |
| ⚠ | 12 | TERMINAL BOARD COMPLETE | 1 | CWA28C2357 | ← | O |
| ⚠ | 13 | ELECTRONIC CONTROLLER - MAIN | 1 | ACXA73C0443 | ACXA73C0444 | O |
| | 14 | PARTICULAR PIECE - TERMINAL | 1 | CWD933137A | ← | |
| ⚠ | 15 | ELECTRONIC CO. (INDICATOR & RECEIVER) | 1 | ACXA73-02450 | ← | O |
| | 16 | SENSOR COMPLETE | 1 | CWA50C2800 | ← | O |
| | 23 | CONTROL BOARD TOP COVER | 1 | ACXH13-00240 | ← | |
| | 24 | INDICATOR HOLDER | 1 | CWD933406 | ← | |
| | 25 | CONTROL BOARD FRONT COVER CO. | 1 | CWH13C1333 | ← | |
| | 26 | DISCHARGE GRILLE COMPLETE | 1 | CWE20C3495 | ← | |
| | 27 | BACK COVER CHASSIS | 1 | CWD933233B | ← | |
| | 28 | FULCRUM | 1 | CWH621131 | ← | |
| | 29 | VERTICAL VANE | 8 | CWE241374 | ← | |
| | 30 | CONNECTING BAR (R) | 2 | CWE261251 | ← | |
| ⚠ | 33 | AIR SWING MOTOR (BIG H. VANE) | 1 | CWA981264 | ← | O |
| | 34 | CAP - DRAIN TRAY | 1 | CWH521259 | ← | |
| | 35 | HORIZONTAL VANE CO. (BIG) | 1 | CWE24C1385 | ← | |
| | 36 | REMOTE CONTROL COMPLETE | 1 | CWA75C4643 | ← | O |
| | 37 | FRONT GRILLE COMPLETE | 1 | ACXE10C00710 | ← | O |
| | 38 | INTAKE GRILLE COMPLETE | 1 | CWE22C1861 | ← | |
| | 39 | GRILLE DOOR COMPLETE | 1 | CWE14C1131 | ← | |
| | 40 | AIR FILTER | 2 | CWD001279 | ← | O |
| | 41 | SCREW - FRONT GRILLE | 2 | XTT4+16CFJ | ← | |
| | 42 | CAP - FRONT GRILLE | 2 | CWH521227 | ← | |
| | 43 | DRAIN HOSE | 1 | CWH851173 | ← | |
| | 44 | INSTALLATION PLATE | 1 | CWH361134 | ← | |
| | 45 | BAG COMPLETE - INSTALLATION SCREW | 1 | CWH82C1705 | ← | |
| | 46 | OPERATING INSTRUCTION | 1 | ACXF55-00750 | ← | |
| | 47 | INSTALLATION INSTRUCTION | 1 | ACXF60-01080 | ← | |
| | 48 | INSTALLATION INSTRUCTION | 1 | ACXF60-01090 | ← | |
| | 55 | BAG COMPLETE (TUBE CONNECTOR) | 1 | CWH82C2030 | ← | |

(Note)

- All parts are supplied from PHAAM, Malaysia (Vendor Code: 00029488).
- “O” marked parts are recommended to be kept in stock.