Order No: PAPAMY1501049CE

Service Manual

Air Conditioner

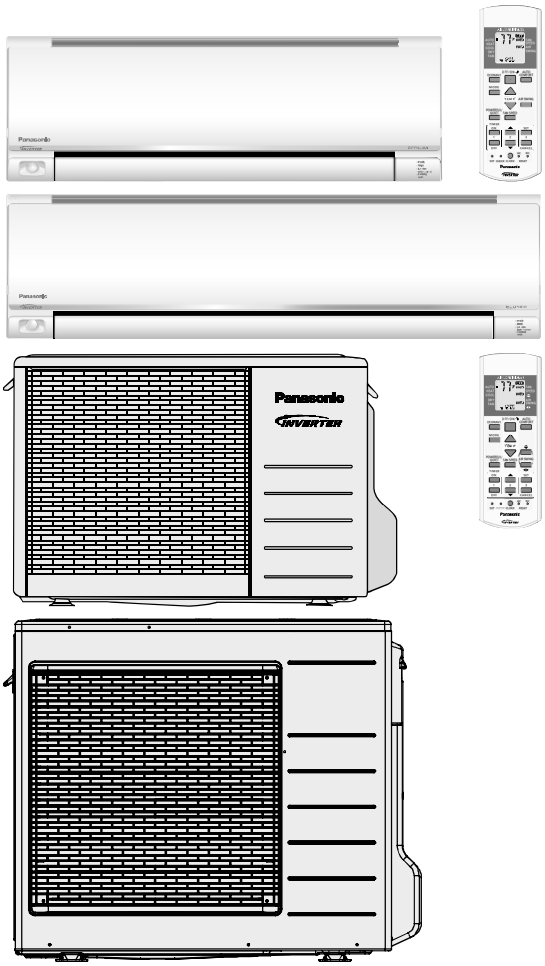

Indoor Unit	Outdoor Unit
CS-E9RKUAW	CU-E9RKUA
CS-E12RKUAW	CU-E12RKUA
CS-E18RKUAW	CU-E18RKUA
CS-E24RKUAW	CU-E24RKUA

Destination
USA
Canada

Please file and use this manual together with the service manual for Model No. CU-2E18NBU and CU-5E36QBU, Order No. PHAAM1111120A1 and PAPAMY1312037CE.

⚠ WARNING

This service information is designed for experienced repair technicians only and is not designed for use by the general public. It does not contain warnings or cautions to advise non-technical individuals of potential dangers in attempting to service a product. Products powered by electricity should be serviced or repaired only by experienced professional technicians. Any attempt to service or repair the products dealt with in this service information by anyone else could result in serious injury or death.

⚠ PRECAUTION OF LOW TEMPERATURE

In order to avoid frostbite, be assured of no refrigerant leakage during the installation or repairing of refrigerant circuit.

Panasonic®

© Panasonic Corporation 2015.

TABLE OF CONTENTS

1. Safety Precautions 3

2. Specification 5

3. Features.....11

4. Location of Controls and Components.....12

4.1 Indoor Unit 12
4.2 Outdoor Unit 12
4.3 Remote Control 12

5. Dimensions 13

5.1 Indoor Unit 13
5.2 Outdoor Unit 15

6. Refrigeration Cycle Diagram 16

6.1 CU-E9RKUA CU-E12RKUA.....16
6.2 CU-E18RKUA CU-E24RKUA.....17

7. Block Diagram 18

7.1 CS-E9RKUAW CU-E9RKUA CS-E12RKUAW CU-E12RKUA.....18
7.2 CS-E18RKUAW CU-E18RKUA CS-E24RKUAW CU-E24RKUA.....19

8. Wiring Connection Diagram 20

8.1 Indoor Unit 20
8.2 Outdoor Unit 22

9. Electronic Circuit Diagram 24

9.1 Indoor Unit 24
9.2 Outdoor Unit 26

10. Printed Circuit Board 28

10.1 Indoor Unit 28
10.2 Outdoor Unit 30

11. Installation Instruction (E9RK and E12RK)....33

11.1 Select the Best Location.....33
11.2 Indoor Unit 34
11.3 Outdoor Unit 38

12. Installation Instruction (E18RK and E24RK) 41

12.1 Select the Best Location.....41
12.2 Indoor Unit 42
12.3 Outdoor Unit 46

13. Operation Control.....49

13.1 Basic Function 49
13.2 Indoor Fan Speed Control 50
13.3 Indoor Fan Motor Operation 51
13.4 Outdoor Fan Motor Operation 51
13.5 Airflow Direction.....52
13.6 Quiet Operation (Cooling Mode/Cooling Area of Dry Mode) 53
13.7 Quiet Operation (Heating) 54
13.8 Powerful Mode Operation.....54
13.9 Timer Control.....54
13.10 Auto Restart Control 55
13.11 Indication Panel 55
13.12 ECONAVI and AUTO COMFORT Operation 55

14. Operation Control (For Multi Split Connection) 59

14.1 Cooling operation 59
14.2 Soft Dry Operation.....59
14.3 Heating Operation 59
14.4 Automatic Operation (For Multi Split Connection Only) 60
14.5 Indoor Fan Motor Operation 60
14.6 Powerful Mode Operation.....60
14.7 Auto restart control 60
14.8 Indication Panel 60

15. Protection Control (E9RK and E12RK).....61

15.1 Protection Control For All Operations.....61
15.2 Protection Control For Cooling & Soft Dry Operation 63

16. Protection Control (E18RK and E24RK).....66

16.1 Protection Control For All Operations.....66
16.2 Protection Control For Cooling & Soft Dry Operation 67

17. Servicing Mode 70

17.1 Auto Off/On Button 70
17.2 Cooling Only Operation (Single connection Only, Multi connection please refer to Multi outdoor manual).....71
17.3 Remote Control Button 72

18. Troubleshooting Guide 73

18.1 Refrigeration Cycle System 73
18.2 Breakdown Self Diagnosis Function.....75
18.3 Error Code Table 76
18.4 Self-diagnosis Method 78

19. Disassembly and Assembly Instructions ... 107

19.1 CS-E9RKUAW CS-E12RKUAW 107
19.2 CS-E18RKUAW CS-E24RKUAW 111
19.3 Outdoor Electronic Controller Removal Procedure 114

20. Technical Data 116

20.1 Cool Mode Performance Data..... 116
20.2 Heat Mode Performance Data..... 120

21. Service Data 122

21.1 Cool Mode Outdoor Air Temperature Characteristic..... 122
21.2 Heat Mode Outdoor Air Temperature Characteristic..... 126
21.3 Piping Length Correction Factor..... 130

22. Exploded View and Replacement Parts List 132

22.1 Indoor Unit 132
22.2 Outdoor Unit 138

1. Safety Precautions

- Read the following “SAFETY PRECAUTIONS” carefully before perform any servicing.
- Electrical work must be installed or serviced by a licensed electrician. Be sure to use the correct rating of the power plug and main circuit for the model installed.
- The caution items stated here must be followed because these important contents are related to safety. The meaning of each indication used is as below. Incorrect installation or servicing due to ignoring of the instruction will cause harm or damage, and the seriousness is classified by the following indications.

WARNING	This indication shows the possibility of causing death or serious injury
CAUTION	This indication shows the possibility of causing injury or damage to properties.

- The items to be followed are classified by the symbols:

⃠	This symbol denotes item that is PROHIBITED from doing.

- Carry out test run to confirm that no abnormality occurs after the servicing. Then, explain to user the operation, care and maintenance as stated in instructions. Please remind the customer to keep the operating instructions for future reference.

WARNING
1. Do not modify the machine, part, material during repairing service.
2. If wiring unit is supplied as repairing part, do not repair or connect the wire even only partial wire break. Exchange the whole wiring unit.
3. Do not wrench the fasten terminal. Pull it out or insert it straightly.
4. Engage authorized dealer or specialist for installation and servicing. If installation of servicing done by the user is defective, it will cause water leakage, electrical shock or fire.
5. Install according to this installation instructions strictly. If installation is defective, it will cause water leakage, electric shock or fire.
6. Use the attached accessories parts and specified parts for installation and servicing. Otherwise, it will cause the set to fall, water leakage, fire or electrical shock.
7. Install at a strong and firm location which is able to withstand the set’s weight. If the strength is not enough or installation is not properly done, the set will drop and cause injury.
8. For electrical work, follow the local national wiring standard, regulation and the installation instruction. An independent circuit and single outlet must be used. If electrical circuit capacity is not enough or defect found in electrical work, it will cause electrical shock or fire.
9. This equipment is strongly recommended to be installed with Earth Leakage Circuit Breaker (ELCB) or Residual Current Device (RCD). Otherwise, it may cause electrical shock and fire in case equipment breakdown or insulation breakdown.
10. Do not use joint cable for indoor/outdoor connection cable. Use the specified indoor/outdoor connection cable, refer to installation instruction CONNECT THE CABLE TO THE INDOOR UNIT and connect tightly for indoor/outdoor connection. Clamp the cable so that no external force will be acted on the terminal. If connecting or fixing is not perfect, it will cause heat up or fire at the connection.
11. Wire routing must be properly arranged so that control board cover is fixed properly. If control board cover is not fixed perfectly, it will cause heat-up or fire at the connection point of terminal, fire or electrical shock.
12. When install or relocate air conditioner, do not let any substance other than the specified refrigerant, eg. air etc. mix into refrigeration cycle (piping). (Mixing of air etc. will cause abnormal high pressure in refrigeration cycle and result in explosion, injury etc.).
13. Do not install outdoor unit near handrail of veranda. When installing air-conditioner unit at veranda of high rise building, child may climb up to outdoor unit and cross over the handrail and causing accident.
14. This equipment must be properly earthed. Earth line must not be connected to gas pipe, water pipe, earth of lightning rod and telephone. Otherwise, it may cause electrical shock in case equipment breakdown or insulation breakdown. ⃠
15. Keep away from small children, the thin film may cling to nose and mouth and prevent breathing. ⃠
16. Do not use unspecified cord, modified cord, joint cord or extension cord for power supply cord. Do not share the single outlet with other electrical appliances. Poor contact, poor insulation or over current will cause electrical shock or fire. ⃠
17. Tighten the flare nut with torque wrench according to specified method. If the flare nut is over-tightened, after a long period, the flare may break and cause refrigerant gas leakage.
18. For R410A model, use piping, flare nut and tools which is specified for R410A refrigerant. Using of existing (R22) piping, flare nut and tools may cause abnormally high pressure in the refrigerant cycle (piping), and possibly result in explosion and injury. Thickness or copper pipes used with R410A must be more than 1/32" (0.8 mm). Never use copper pipes thinner than 1/32" (0.8 mm). It is desirable that the amount of residual oil is less than 0.0008 oz/ft (40 mg/10 m). ⃠

WARNING
19. During installation, install the refrigerant piping properly before run the compressor. (Operation of compressor without fixing refrigeration piping and valves at opened condition will cause suck-in of air, abnormal high pressure in refrigeration cycle and result in explosion, injury etc.).
20. During pump down operation, stop the compressor before remove the refrigeration piping. (Removal of refrigeration piping while compressor is operating and valves are opened condition will cause suck-in of air, abnormal high pressure in refrigeration cycle and result in explosion, injury etc.).
21. After completion of installation or service, confirm there is no leakage of refrigerant gas. It may generate toxic gas when the refrigerant contacts with fire.
22. Ventilate if there is refrigerant gas leakage during operation. It may cause toxic gas when the refrigerant contacts with fire.
23. Do not insert your fingers or other objects into the unit, high speed rotating fan may cause injury.
24. Must not use other parts except original parts describe in catalog and manual.
25. Using of refrigerant other than the specified type may cause product damage, burst and injury etc.

CAUTION
1. Do not install the unit at place where leakage of flammable gas may occur. In case gas leaks and accumulates at surrounding of the unit, it may cause fire.
2. Carry out drainage piping as mentioned in installation instructions. If drainage is not perfect, water may enter the room and damage the furniture.
3. Tighten the flare nut with torque wrench according to specified method. If the flare nut is over-tightened, after a long period, the flare may break and cause refrigerant gas leakage.
4. Do not touch outdoor unit air inlet and aluminium fin. It may cause injury.
5. Select an installation location which is easy for maintenance.
6. Pb free solder has a higher melting point than standard solder; typically the melting point is 50°F – 70°F (30°C – 40°C) higher. Please use a high temperature solder iron. In case of the soldering iron with temperature control, please set it to 700 ± 20°F (370 ± 10°C). Pb free solder will tend to splash when heated too high (about 1100°F / 600°C).
7. Power supply connection to the room air conditioner. Power supply cord shall be UL listed or CSA approved 3 conductor with minimum AWG14 (For E9RK and E12RK) and AWG12 (For E18RK and E24RK) wires. Power supply point should be in an easily accessible place for power disconnection in case of emergency. In some countries, permanent connection of this air conditioner to the power supply is prohibited. Fix power supply connection to a circuit breaker for permanent connection. Use NRTL approved fuse or circuit breaker (rating refers to name plate) for permanent connection.
8. Do not release refrigerant during piping work for installation, servicing, reinstallation and during repairing a refrigerant parts. Take care of the liquid refrigerant, it may cause frostbite.
9. Installation or servicing work: It may need two people to carry out the installation or servicing work.
10. Do not install this appliance in a laundry room or other location where water may drip from the ceiling, etc.
11. Do not sit or step on the unit, you may fall down accidentally.
12. Do not touch the sharp aluminium fins or edges of metal parts. If you are required to handle sharp parts during installation or servicing, please wear hand glove. Sharp parts may cause injury.

2. Specification

Model		Indoor	CS-E9RKUAW						CS-E12RKUAW					
		Outdoor	CU-E9RKUA						CU-E12RKUA					
Performance Test Condition			ARI						ARI					
Power Supply		Phase, Hz	Single, 60						Single, 60					
		V	208			230			208			230		
			Min.	Mid.	Max.	Min.	Mid.	Max.	Min.	Mid.	Max.	Min.	Mid.	Max.
Cooling	Capacity	kW	1.20	2.64	3.00	1.20	2.64	3.00	1.20	3.36	3.90	1.20	3.36	3.90
		BTU/h	4100	9000	10200	4100	9000	10200	4100	11500	13300	4100	11500	13300
	Running Current	A	-	3.6	-	-	3.2	-	-	4.7	-	-	4.2	-
	Input Power	W	250	690	850	250	690	850	250	920	1.15k	250	920	1.15k
	EER	W/W	4.80	3.83	3.53	4.80	3.83	3.53	4.80	3.65	3.39	4.80	3.65	3.39
		Btu/hW	16.40	13.00	12.00	16.40	13.00	12.00	16.40	12.50	11.55	16.40	12.50	11.55
	Power Factor	%	-	92	-	-	94	-	-	94	-	-	95	-
	Indoor Noise (H / L / QLo)	dB-A	40 / 25 / 20			40 / 25 / 20			43 / 28 / 20			43 / 28 / 20		
		Power Level dB	56 / - / -			56 / - / -			59 / - / -			59 / - / -		
	Outdoor Noise (H / L / QLo)	dB-A	47 / - / -			47 / - / -			48 / - / -			48 / - / -		
		Power Level dB	62 / - / -			62 / - / -			63 / - / -			63 / - / -		
Heating	Capacity	kW	1.20	3.52	4.14	1.20	3.52	4.14	1.20	4.05	4.77	1.20	4.05	4.77
		BTU/h	4100	12000	14100	4100	12000	14100	4100	13800	16300	4100	13800	16300
	Running Current	A	-	5.7	-	-	5.1	-	-	6.3	-	-	5.6	-
	Input Power	W	200	1.12k	1.50k	200	1.12k	1.50k	200	1.25k	1.71k	200	1.25k	1.71k
	COP	W/W	6.00	3.14	2.76	6.00	3.14	2.76	6.00	3.24	2.79	6.00	3.24	2.79
		Btu/hW	20.50	10.70	9.40	20.50	10.70	9.40	20.50	11.00	9.50	20.50	11.00	9.50
	Power Factor	%	-	94	-	-	95	-	-	95	-	-	97	-
	Indoor Noise (H / L / QLo)	dB-A	42 / 29 / 26			42 / 29 / 26			44 / 35 / 32			44 / 35 / 32		
		Power Level dB	58 / - / -			58 / - / -			60 / - / -			60 / - / -		
	Outdoor Noise (H / L / QLo)	dB-A	48 / - / -			48 / - / -			49 / - / -			49 / - / -		
		Power Level dB	63 / - / -			63 / - / -			64 / - / -			64 / - / -		
Max Current (A) / Max Input Power (W)			7.0 / 1.57k						7.8 / 1.71k					
Starting Current (A)			5.7						6.3					
Min Circuit Ampacity			15.0						15.0					
Max. Current Protection			15.0						15.0					
SEER / HSPF			23.00 / 11.00						22.50 / 11.00					
Compressor	Type		Hermetic Motor / Rotary						Hermetic Motor / Rotary					
	Motor Type		Brushless (4 poles)						Brushless (4 poles)					
	Output Power	W	700						700					
Indoor Fan	Type		Cross-flow fan						Cross-flow fan					
	Material		ASG20K1						ASG20K1					
	Motor Type		DC (8 poles)						DC (8 poles)					
	Input Power	W	47.0 - 47.0						47.0 - 47.0					
	Output Power	W	40						40					
	Speed	QLo	rpm	Cooling : 610 Heating : 730						Cooling : 620 Heating : 940				
		Lo	rpm	Cooling : 710 Heating : 830						Cooling : 780 Heating : 1040				
		Me	rpm	Cooling : 910 Heating : 1040						Cooling : 1000 Heating : 1210				
		Hi	rpm	Cooling : 1120 Heating : 1250						Cooling : 1230 Heating : 1380				
		SHi	rpm	Cooling : 1210 Heating : 1340						Cooling : 1350 Heating : 1450				

Model			Indoor	CS-E9RKUAW	CS-E12RKUAW
			Outdoor	CU-E9RKUA	CU-E12RKUA
Outdoor Fan	Type			Propeller	Propeller
	Material			PP	PP
	Motor Type			DC (8 poles)	DC (8 poles)
	Input Power		W	-	-
	Output Power		W	40	40
	Speed	Hi	rpm	C: 830 H: 780	C: 830 H: 820
Moisture Removal			L/h (Pt/h)	0.6 (1.3)	0.8 (1.7)
Indoor Airflow	QLo		m^3/min (ft^3/min)	Cooling : 6.28 (222) Heating : 7.08 (250)	Cooling : 5.97 (211) Heating : 9.37 (331)
	Lo		m^3/min (ft^3/min)	Cooling : 7.40 (261) Heating : 8.20 (290)	Cooling : 7.76 (274) Heating : 10.49 (370)
	Me		m^3/min (ft^3/min)	Cooling : 9.64 (340) Heating : 10.55 (373)	Cooling : 10.22 (361) Heating : 12.40 (438)
	Hi		m^3/min (ft^3/min)	Cooling : 12.0 (425) Heating : 12.9 (455)	Cooling : 12.8 (450) Heating : 14.3 (505)
	SHi		m^3/min (ft^3/min)	Cooling : 13.00 (459) Heating : 13.91 (491)	Cooling : 14.14 (499) Heating : 15.08 (532)
Outdoor Airflow	Hi		m^3/min (ft^3/min)	Cooling : 31.0 (1095) Heating : 31.0 (1095)	Cooling : 31.2 (1100) Heating : 31.2 (1100)
Refrigeration Cycle	Control Device			Expansion Valve	Expansion Valve
	Refrigerant Oil		cm^3	FV50S (320)	FV50S (320)
	Refrigerant Type		g (oz)	R410A, 980 (34.6)	R410A, 1.08k (38.1)
Dimension	Height(I/D / O/D)		mm (inch)	290 (11-7/16) / 540 (21-9/32)	290 (11-7/16) / 540 (21-9/32)
	Width (I/D / O/D)		mm (inch)	870 (34-9/32) / 780 (30-23/32)	870 (34-9/32) / 780 (30-23/32)
	Depth (I/D / O/D)		mm (inch)	214 (8-7/16) / 289 (11-13/32)	214 (8-7/16) / 289 (11-13/32)
Weight	Net (I/D / O/D)		kg (lb)	9 (20) / 37 (82)	9 (20) / 37 (82)
Piping	Pipe Diameter (Liquid / Gas)		mm (inch)	6.35 (1/4) / 9.52 (3/8)	6.35 (1/4) / 12.70 (1/2)
	Standard length		m (ft)	7.5 (24.6)	7.5 (24.6)
	Length range (min – max)		m (ft)	3 (9.8) ~ 20 (65.6)	3 (9.8) ~ 20 (65.6)
	I/D & O/D Height different		m (ft)	15 (49.2)	15 (49.2)
	Additional Gas Amount		g/m (oz/ft)	20 (0.2)	20 (0.2)
	Length for Additional Gas		m (ft)	7.5 (24.6)	7.5 (24.6)
Drain Hose	Inner Diameter		mm (inch)	16.7 (5/8)	16.7 (5/8)
	Length		mm (inch)	650 (25-5/8)	650 (25-5/8)
Indoor Heat Exchanger	Fin Material			Aluminium (Pre Coat)	Aluminium (Pre Coat)
	Fin Type			Slit Fin	Slit Fin
	Row x Stage x FPI			2 x 15 x 21	2 x 15 x 21
	Size (W x H x L)		inch	1 x 12-13/32 x 24	1 x 12-13/32 x 24
Outdoor Heat Exchanger	Fin Material			Aluminium (Blue coated)	Aluminium (Blue coated)
	Fin Type			Corrugate Fin	Corrugate Fin
	Row x Stage x FPI			2 x 24 x 17	2 x 24 x 17
	Size (W x H x L)		inch	1-13/32 x 19-13/16 x 28-1/16 26-7/8	1-13/32 x 19-13/16 x 32-7/16 31-1/4
Air Filter	Material			Polypropelene	Polypropelene
	Type			One-touch	One-touch
Power Supply				Outdoor	Outdoor
Power Supply Cord			A	-	-
Thermostat				-	-
Protection Device				-	-

Model	Indoor	CS-E9RKUAW		CS-E12RKUAW	
	Outdoor	CU-E9RKUA		CU-E12RKUA	
		DRY BULB	WET BULB	DRY BULB	WET BULB
Indoor Operation Range (Cooling) (°F / °C)	Maximum	89.6 / 32	73.4 / 23	89.6 / 32	73.4 / 23
	Minimum	60.8 / 16	51.8 / 11	60.8 / 16	51.8 / 11
Outdoor Operation Range (Cooling) (°F / °C)	Maximum	114.8 / 46	78.8 / 26	114.8 / 46	78.8 / 26
	Minimum	0 / -17.8	- / -	0 / -17.8	- / -
Indoor Operation Range (Heating) (°F / °C)	Maximum	86.0 / 30	- / -	86.0 / 30	- / -
	Minimum	60.8 / 16	- / -	60.8 / 16	- / -
Outdoor Operation Range (Heating) (°F / °C)	Maximum	75.2 / 24	64.4 / 18	75.2 / 24	64.4 / 18
	Minimum	-4 / -20	-5.8 / -21	-4 / -20	-5.8 / -21

1. Cooling capacities are based on indoor temperature of 27°C DRY BULB (80.6°F DRY BULB), 19.0°C WET BULB (66°F WET BULB) and outdoor air temperature of 35°C DRY BULB (95°F DRY BULB), 24°C WET BULB (75.2°F WET BULB)
2. Heating capacities are based on indoor temperature of 20°C Dry Bulb (68°F Dry Bulb) and outdoor air temperature of 7°C Dry Bulb (44.6°F Dry Bulb), 6°C Wet Bulb (42.8°F Wet Bulb)
3. Specifications are subjected to change without prior notice for further improvement.

Model		Indoor	CS-E18RKUAW						CS-E24RKUAW					
		Outdoor	CU-E18RKUA						CU-E24RKUA					
Performance Test Condition			ARI						ARI					
Power Supply		Phase, Hz	Single, 60						Single, 60					
		V	208			230			208			230		
			Min.	Mid.	Max.	Min.	Mid.	Max.	Min.	Mid.	Max.	Min.	Mid.	Max.
Cooling	Capacity	kW	1.70	5.04	5.80	1.70	5.04	5.80	1.70	7.02	8.00	1.70	7.02	8.00
		BTU/h	5800	17200	19800	5800	17200	19800	5800	24000	27200	5800	24000	27200
	Running Current	A	-	7.00	-	-	6.30	-	-	11.90	-	-	10.80	-
	Input Power	W	430	1.30k	1.60k	430	1.30k	1.60k	430	2.35k	2.72k	430	2.35k	2.72k
	EER	W/W	3.95	3.88	3.63	3.95	3.88	3.63	3.95	2.99	2.94	3.95	2.99	2.94
		Btu/hW	13.45	13.20	12.35	13.45	13.20	12.35	13.45	10.20	10.00	13.45	10.20	10.00
	Power Factor	%	-	89	-	-	90	-	-	95	-	-	95	-
	Indoor Noise (H / L / QLo)	dB-A	47 / 39 / 36			47 / 39 / 36			48 / 40 / 37			48 / 40 / 37		
		Power Level dB	63 / - / -			63 / - / -			64 / - / -			64 / - / -		
	Outdoor Noise (H / L / QLo)	dB-A	49 / - / -			49 / - / -			51 / - / -			51 / - / -		
		Power Level dB	63 / - / -			63 / - / -			65 / - / -			65 / - / -		
Heating	Capacity	kW	1.70	6.33	6.43	1.70	6.33	6.43	1.70	8.46	8.56	1.70	8.46	8.56
		BTU/h	5800	21600	22000	5800	21600	22000	5800	28800	29200	5800	28800	29200
	Running Current	A	-	9.30	-	-	8.30	-	-	12.60	-	-	11.40	-
	Input Power	W	380	1.75k	1.80k	380	1.75k	1.80k	380	2.50k	2.66k	380	2.50k	2.66k
	COP	W/W	4.47	3.62	3.57	4.47	3.62	3.57	4.47	3.38	3.22	4.47	3.38	3.22
		Btu/hW	15.25	12.30	12.20	15.25	12.30	12.20	15.25	11.50	10.95	15.25	11.50	10.95
	Power Factor	%	-	90	-	-	92	-	-	95	-	-	95	-
	Indoor Noise (H / L / QLo)	dB-A	46 / 39 / 36			46 / 39 / 36			48 / 40 / 37			48 / 40 / 37		
		Power Level dB	62 / - / -			62 / - / -			64 / - / -			64 / - / -		
	Outdoor Noise (H / L / QLo)	dB-A	51 / - / -			51 / - / -			53 / - / -			53 / - / -		
		Power Level dB	65 / - / -			65 / - / -			67 / - / -			67 / - / -		
Max Current (A) / Max Input Power (W)			12.7 / 2.69k						13.7 / 3.06k					
Starting Current (A)			9.3						12.6					
Min Circuit Ampacity			15.0						20.0					
Max. Overcurrent Protection			20.0						25.0					
SEER / HSPF			19.50 / 10.00						19.00 / 10.00					
Compressor	Type		Hermetic Motor / Rotary						Hermetic Motor / Rotary					
	Motor Type		Brushless (4 poles)						Brushless (4 poles)					
	Output Power	W	1.7k						1.7k					
Indoor Fan	Type		Cross-flow fan						Cross-flow fan					
	Material		ASG30K1						ASG30K1					
	Motor Type		DC (8 poles)						DC (8 poles)					
	Input Power	W	94.8 - 94.8						94.8 - 94.8					
	Output Power	W	40						40					
	Speed QLo	rpm	Cooling : 970 Heating : 1030						Cooling : 1000 Heating : 1110					
	Speed Lo	rpm	Cooling : 1060 Heating : 1120						Cooling : 1090 Heating : 1220					
	Speed Me	rpm	Cooling : 1220 Heating : 1260						Cooling : 1240 Heating : 1360					
	Speed Hi	rpm	Cooling : 1380 Heating : 1410						Cooling : 1400 Heating : 1500					
	Speed SHi	rpm	Cooling : 1480 Heating : 1500						Cooling : 1500 Heating : 1600					

Model			Indoor	CS-E18RKUAW		CS-E24RKUAW	
			Outdoor	CU-E18RKUA		CU-E24RKUA	
Outdoor Fan	Type			Propeller		Propeller	
	Material			PP		PP	
	Motor Type			DC Motor (8 poles)		DC Motor (8 poles)	
	Input Power		W	-		-	
	Output Power		W	60		60	
	Speed	Hi	rpm	Cooling: 700 Heating: 700		Cooling: 730 Heating: 750	
Moisture Removal			L/h (Pt/h)	1.4 (3.0)		3.6 (7.6)	
Indoor Airflow	QLo		m^3/min (ft^3/min)	Cooling : 13.28 (469) Heating : 14.40 (508)		Cooling : 13.42 (474) Heating : 14.86 (525)	
	Lo		m^3/min (ft^3/min)	Cooling : 14.53 (513) Heating : 15.65 (553)		Cooling : 14.67 (518) Heating : 16.39 (579)	
	Me		m^3/min (ft^3/min)	Cooling : 16.77 (592) Heating : 17.61 (622)		Cooling : 16.77 (592) Heating : 18.35 (648)	
	Hi		m^3/min (ft^3/min)	Cooling : 19.00 (670) Heating : 19.70 (695)		Cooling : 19.00 (670) Heating : 20.30 (715)	
	SHi		m^3/min (ft^3/min)	Cooling : 20.40 (720) Heating : 20.96 (740)		Cooling : 20.40 (720) Heating : 21.70 (766)	
Outdoor Airflow	Hi		m^3/min (ft^3/min)	Cooling : 54.5 (1925) Heating : 54.5 (1925)	Cooling : 54.5 (1925) Heating : 54.5 (1925)	Cooling : 54.9 (1940) Heating : 56.5 (1995)	Cooling : 54.9 (1940) Heating : 56.5 (1995)
Refrigeration Cycle	Control Device			Expansion Valve		Expansion Valve	
	Refrigerant Oil		cm^3	FV50S (800)		FV50S (800)	
	Refrigerant Type		g (oz)	R410A, 1.60k (56.5)		R410A, 1.85k (65.3)	
Dimension	Height(I/D / O/D)		mm (inch)	290 (11-7/16) / 795 (31-5/16)		290 (11-7/16) / 795 (31-5/16)	
	Width (I/D / O/D)		mm (inch)	1070 (42-5/32) / 875 (34-15/32)		1070 (42-5/32) / 875 (34-15/32)	
	Depth (I/D / O/D)		mm (inch)	240 (9-15/32) / 320 (12-5/8)		240 (9-15/32) / 320 (12-5/8)	
Weight	Net (I/D / O/D)		kg (lb)	12 (26)	60 (132)	12 (26)	60 (132)
Piping	Pipe Diameter (Liquid / Gas)		mm (inch)	6.35 (1/4) / 12.70 (1/2)		6.35 (1/4) / 15.88 (5/8)	
	Standard length		m (ft)	7.5 (24.6)		7.5 (24.6)	
	Length range (min – max)		m (ft)	3 (9.8) ~ 30.5 (100.0)		3 (9.8) ~ 30.5 (100.0)	
	I/D & O/D Height different		m (ft)	15 (49.2)		15 (49.2)	
	Additional Gas Amount		g/m (oz/ft)	25 (0.3)		25 (0.3)	
	Length for Additional Gas		m (ft)	10 (32.8)		10 (32.8)	
Drain Hose	Inner Diameter		mm (inch)	16.7 (5/8)		16.7 (5/8)	
	Length		mm (inch)	650 (25-5/8)		650 (25-5/8)	
Indoor Heat Exchanger	Fin Material			Aluminium (Pre Coat)		Aluminium (Pre Coat)	
	Fin Type			Slit Fin		Slit Fin	
	Row x Stage x FPI			2 x 15 x 21		2 x 15 x 21	
	Size (W x H x L)		inch	1 x 12-13/32 x 31-7/8		1 x 12-13/32 x 31-7/8	
Outdoor Heat Exchanger	Fin Material			Aluminium (Blue coated)		Aluminium (Blue coated)	
	Fin Type			Corrugate Fin		Corrugate Fin	
	Row x Stage x FPI			2 x 36 x 19		2 x 36 x 19	
	Size (W x H x L)		inch	1-13/32 x 29-25/32 x 34-7/32 35-5/16		1-13/32 x 29-25/32 x 34-7/32 35-5/16	
Air Filter	Material			Polypropelene		Polypropelene	
	Type			One-touch		One-touch	
Power Supply				Outdoor		Outdoor	
Power Supply Cord			A	-		-	
Thermostat				-		-	
Protection Device				-		-	

Model	Indoor	CS-E18RKUAW		CS-E24RKUAW	
	Outdoor	CU-E18RKUA		CU-E24RKUA	
		DRY BULB	WET BULB	DRY BULB	WET BULB
Indoor Operation Range (Cooling) (°F / °C)	Maximum	89.6 / 32	73.4 / 23	89.6 / 32	73.4 / 23
	Minimum	60.8 / 16	51.8 / 11	60.8 / 16	51.8 / 11
Outdoor Operation Range (Cooling) (°F / °C)	Maximum	114.8 / 46	78.8 / 26	114.8 / 46	78.8 / 26
	Minimum	0 / -17.8	- / -	0 / -17.8	- / -
Indoor Operation Range (Heating) (°F / °C)	Maximum	86.0 / 30	- / -	86.0 / 30	- / -
	Minimum	60.8 / 16	- / -	60.8 / 16	- / -
Outdoor Operation Range (Heating) (°F / °C)	Maximum	75.0 / 24	64.4 / 18	75.0 / 24	64.4 / 18
	Minimum	-4 / -20	-5.8 / -21	-4 / -20	-5.8 / -21

1. Cooling capacities are based on indoor temperature of 80°F DRY BULB, 67°F WET BULB and outdoor air temperature of 95°F DRY BULB, 75°F WET BULB.
2. Heating capacities are based on indoor temperature of 70°F DRY BULB, 60°F WET BULB and outdoor air temperature of 47°F DRY BULB, 43°F WET BULB.
3. Specifications are subjected to change without prior notice for further improvement.

3. Features

- **Inverter Technology**
  - Wider output power range
  - Energy saving
  - Quick Cooling
  - More precise temperature control

- **Environment Protection**
  - Non-ozone depletion substances refrigerant (R410A)

- **Long Installation Piping**
  - CS/CU-E9/12RK, long piping up to 65 feet (20 meters)
  - CS/CU-E18/24RK, long piping up to 100 feet (30 meters)

- **Easy to use remote control**

- **Quality Improvement**
  - Random auto restart after power failure for safety restart operation
  - Gas leakage protection
  - Prevent compressor reverse cycle
  - Inner protector to protect Compressor
  - Noise prevention during soft dry operation

- **Operation Improvement**
  - Quiet mode to reduce the indoor unit operating sound
  - Powerful mode to reach the desired room temperature quickly

- **Serviceability Improvement**
  - Breakdown Self Diagnosis function

4. Location of Controls and Components

4.1 Indoor Unit

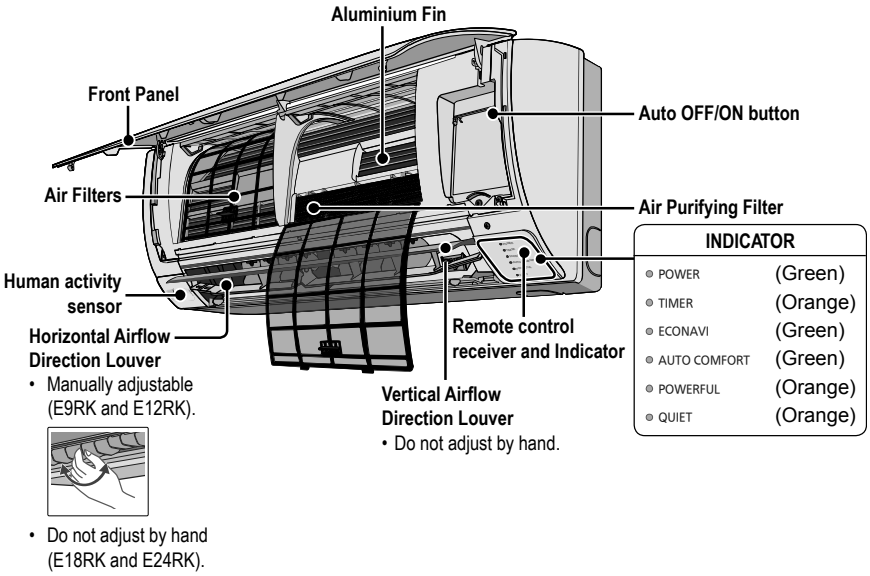

4.2 Outdoor Unit

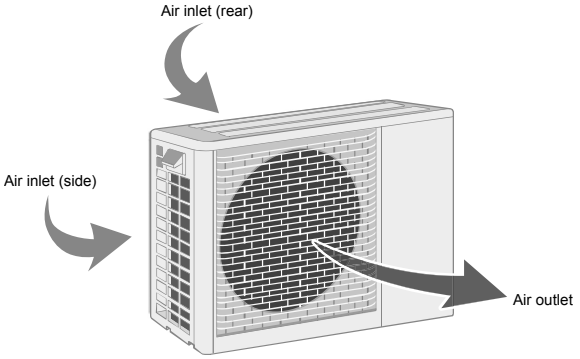

4.3 Remote Control

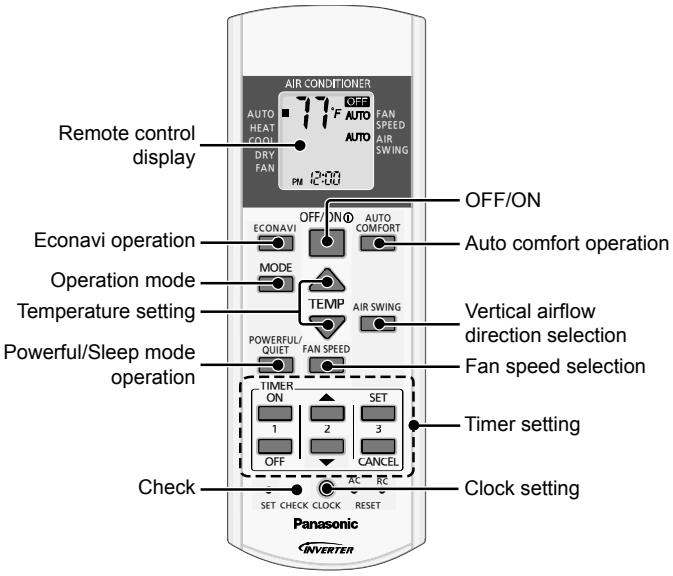

E9RK E12RK

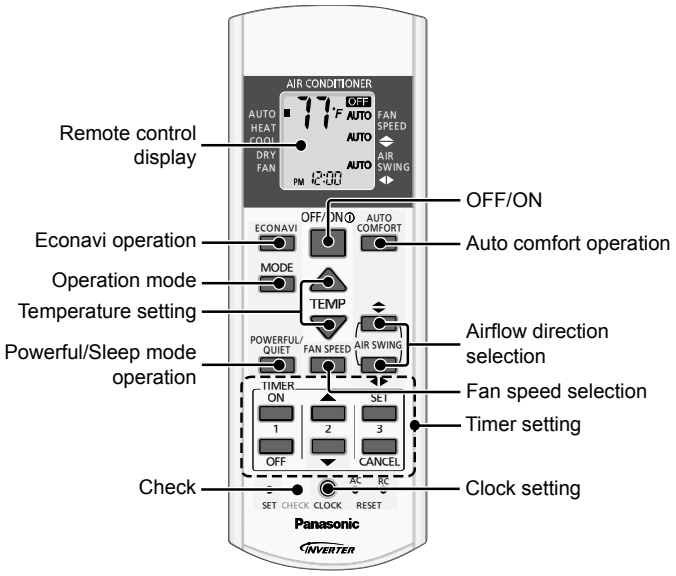

E18RK E24RK

5. Dimensions

5.1 Indoor Unit

5.1.1 CS-E9RKUAW CS-E12RKUAW

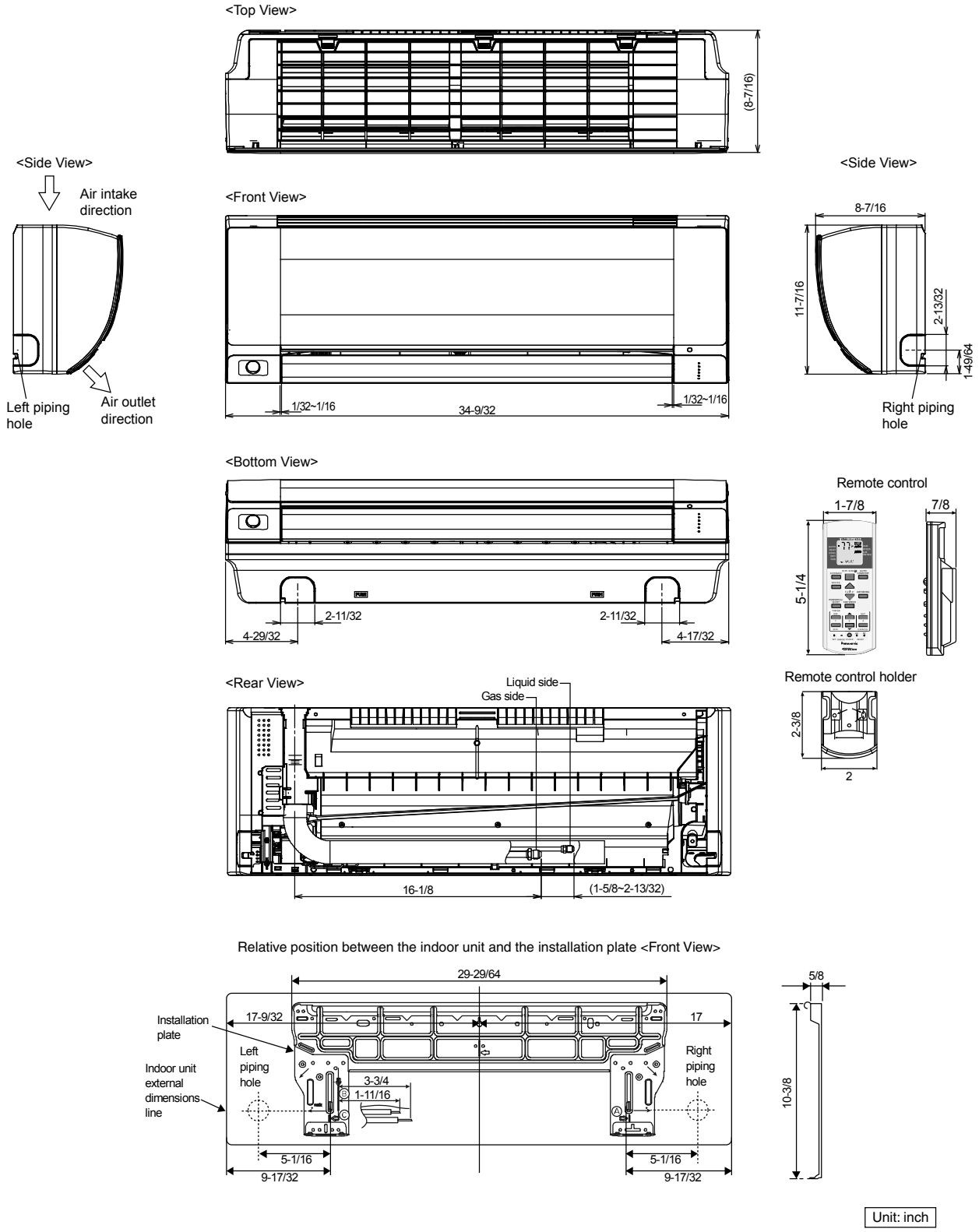

5.1.2 CS-E18RKUAW CS-E24RKUAW

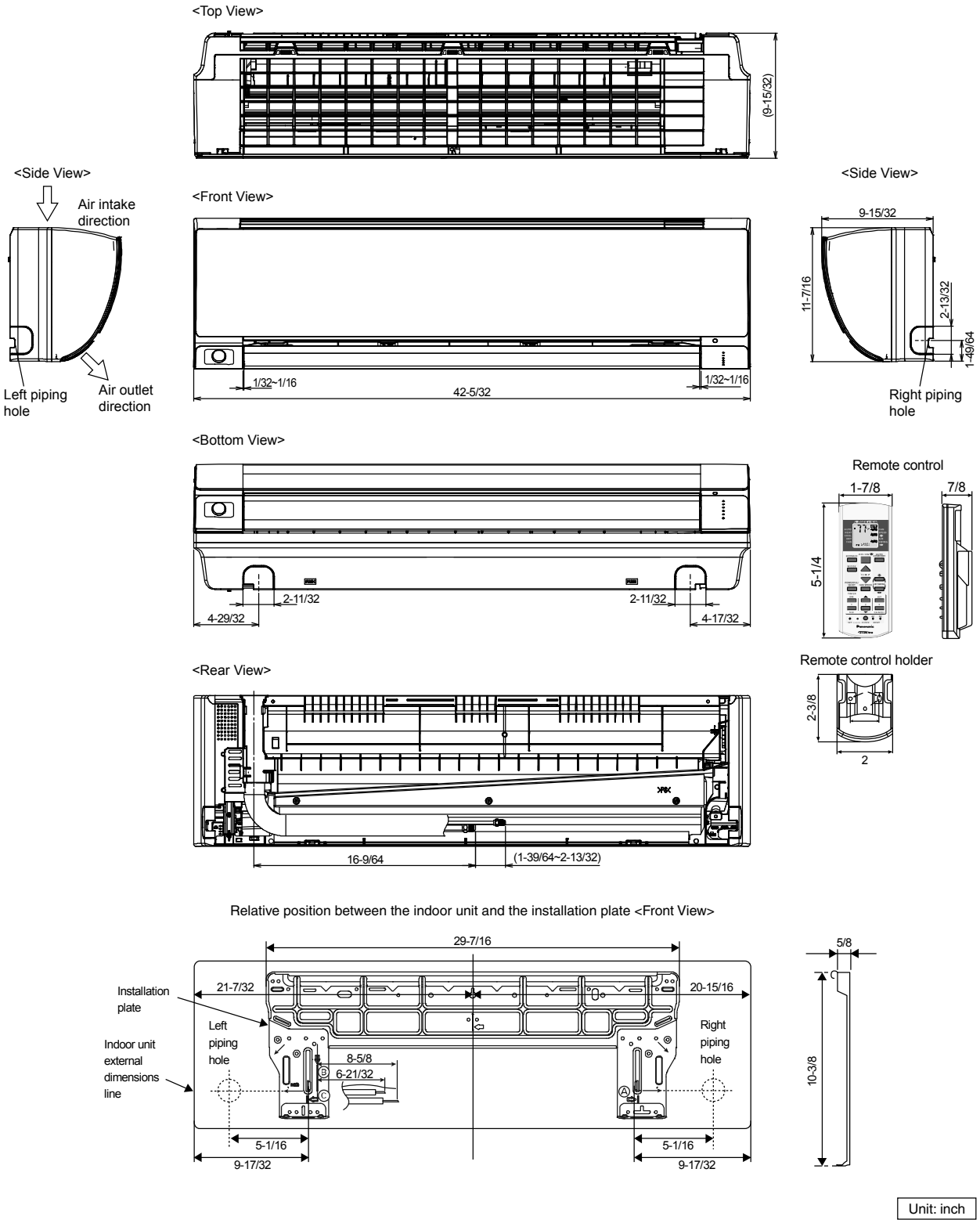

5.2 Outdoor Unit

5.2.1 CU-E9RKUA CU-E12RKUA

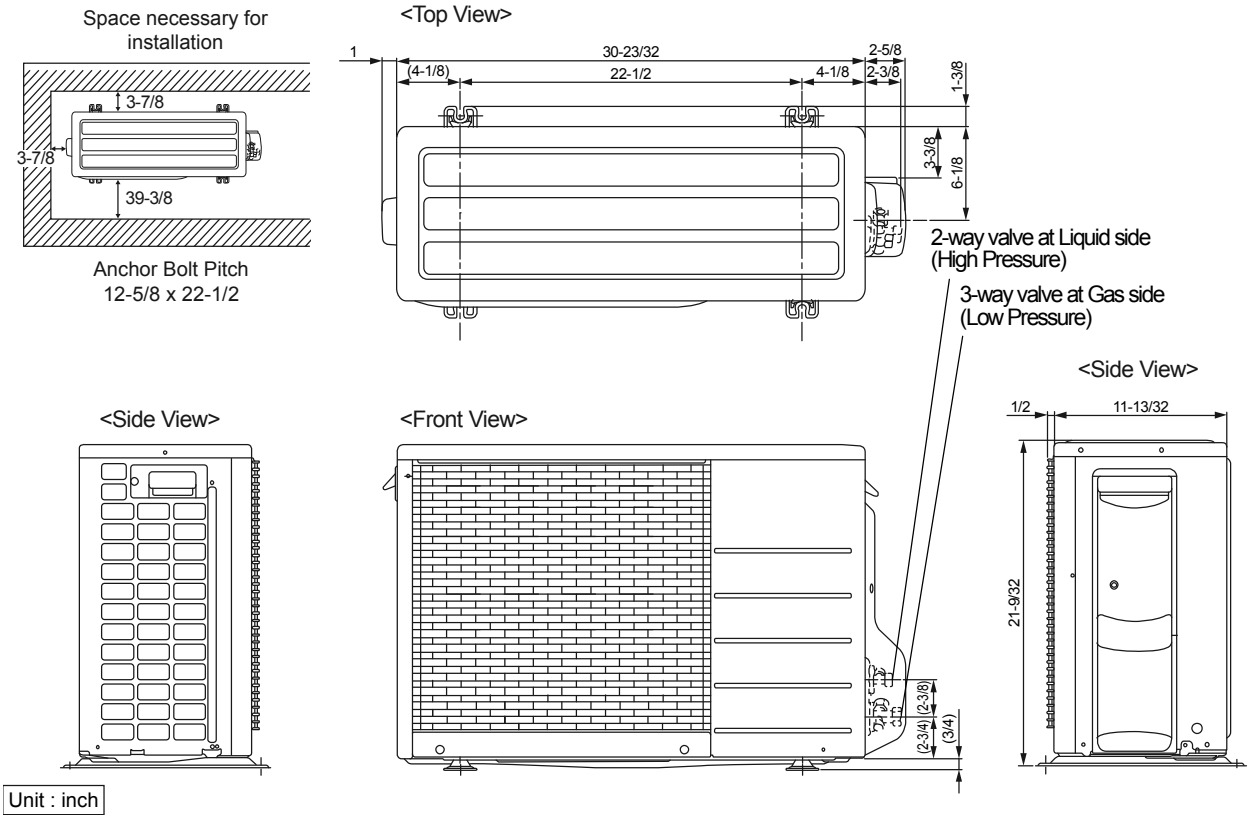

5.2.2 CU-E18RKUA CU-E24RKUA

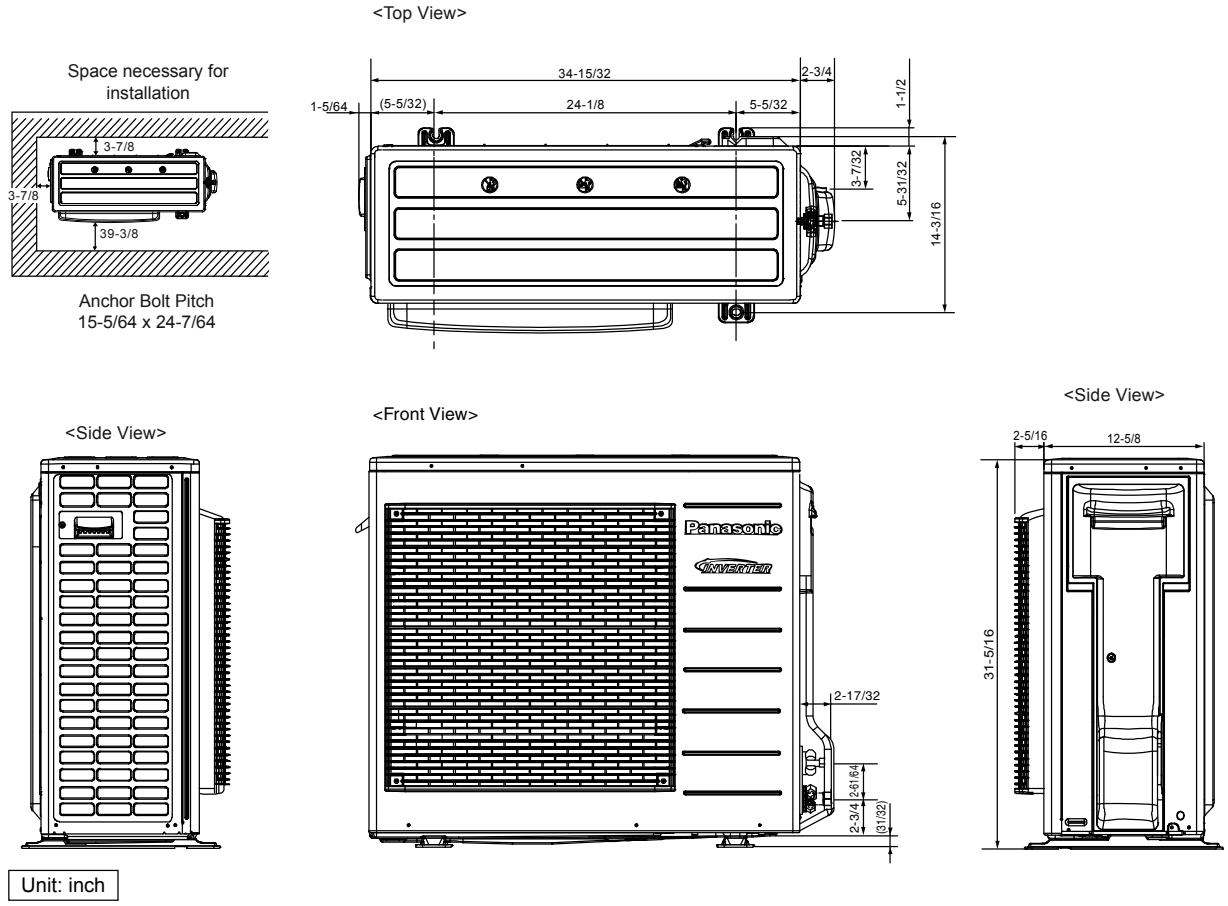

6. Refrigeration Cycle Diagram

6.1 CU-E9RKUA CU-E12RKUA

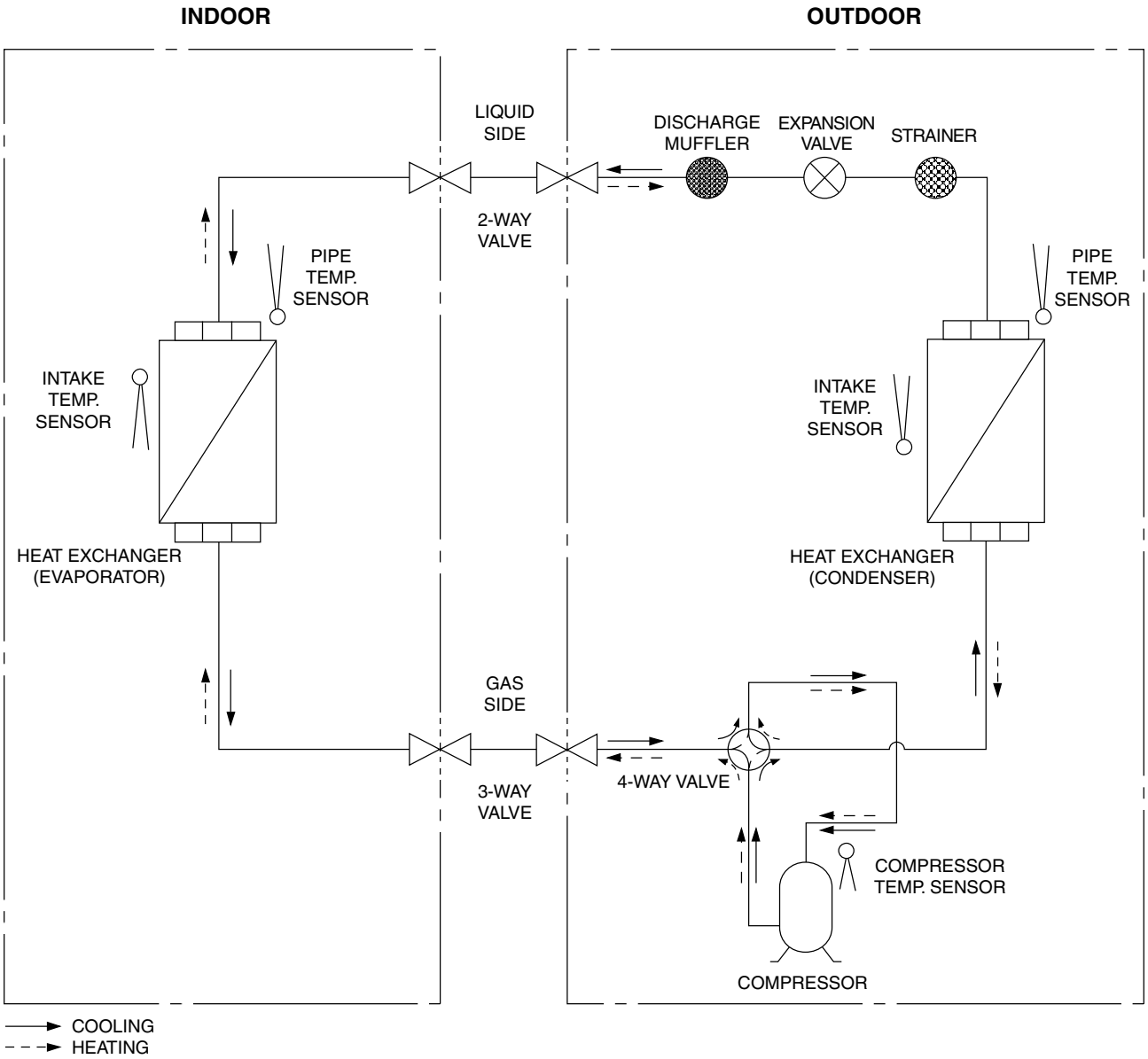

6.2 CU-E18RKUA CU-E24RKUA

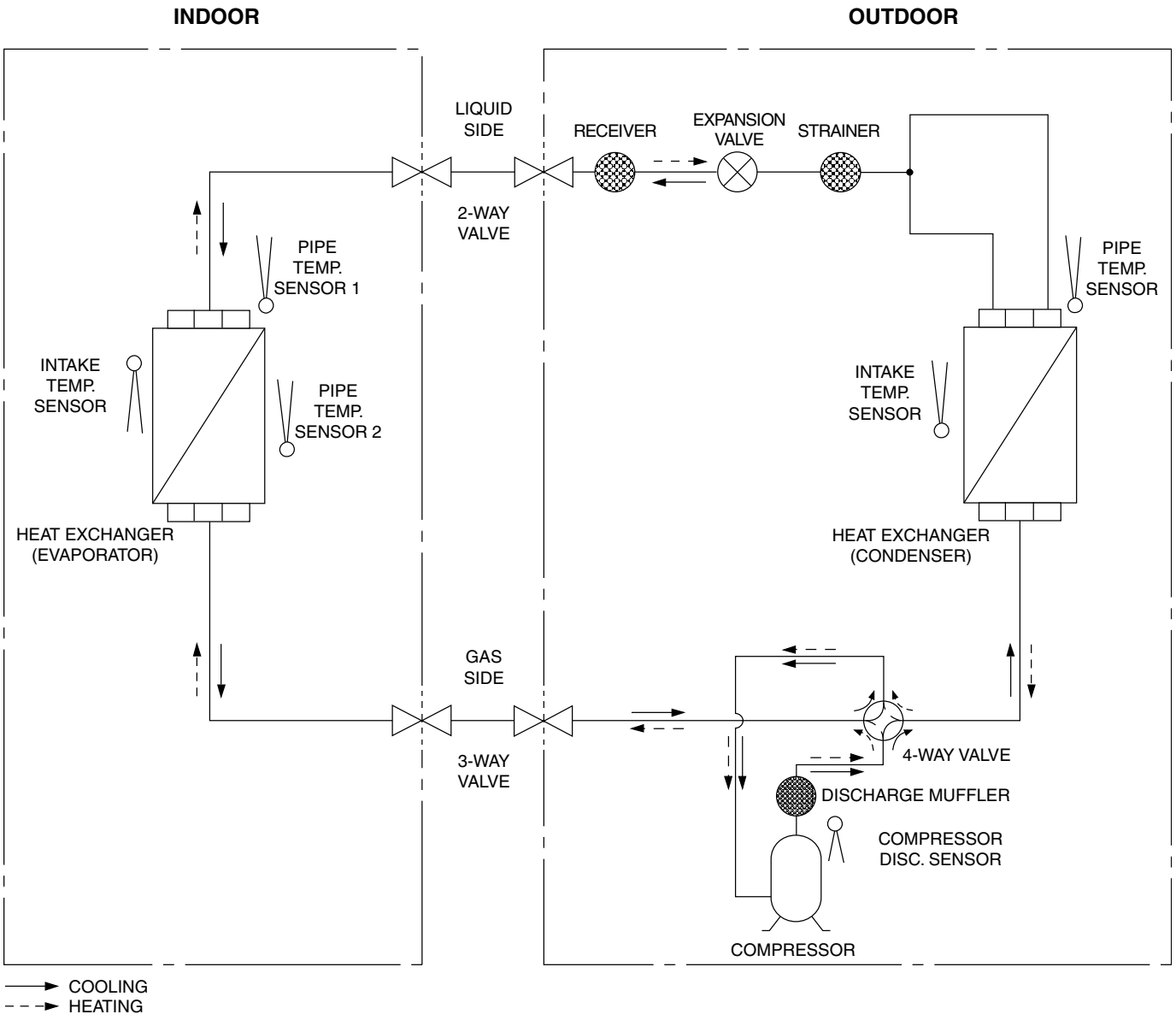

7. Block Diagram

7.1 CS-E9RKUAW CU-E9RKUA CS-E12RKUAW CU-E12RKUA

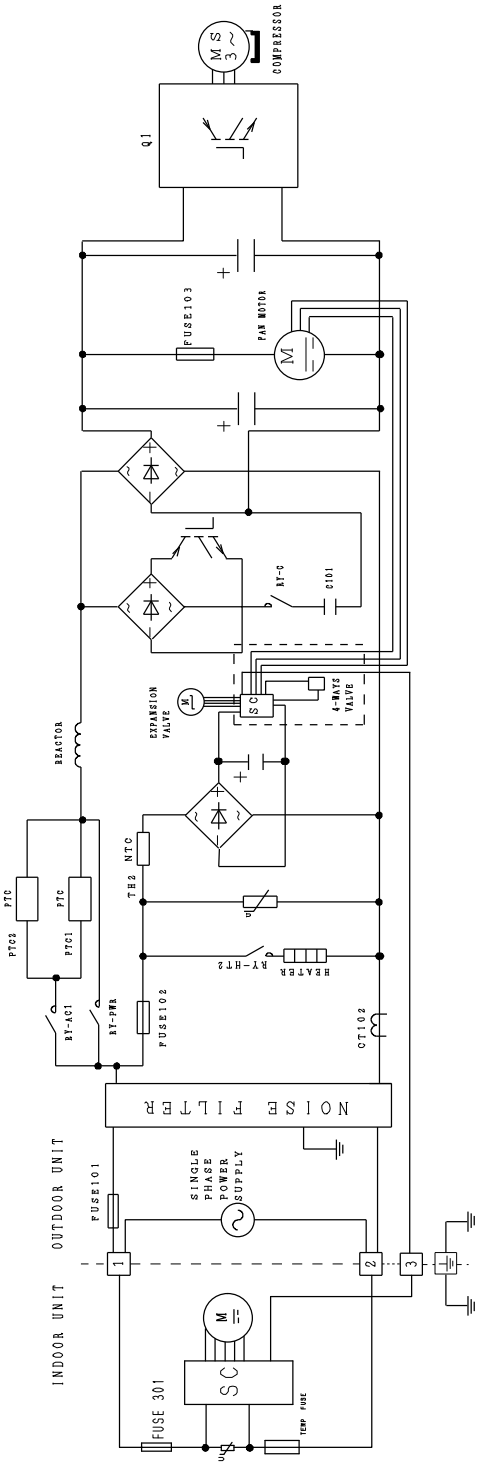

7.2 CS-E18RKUAW CU-E18RKUA CS-E24RKUAW CU-E24RKUA

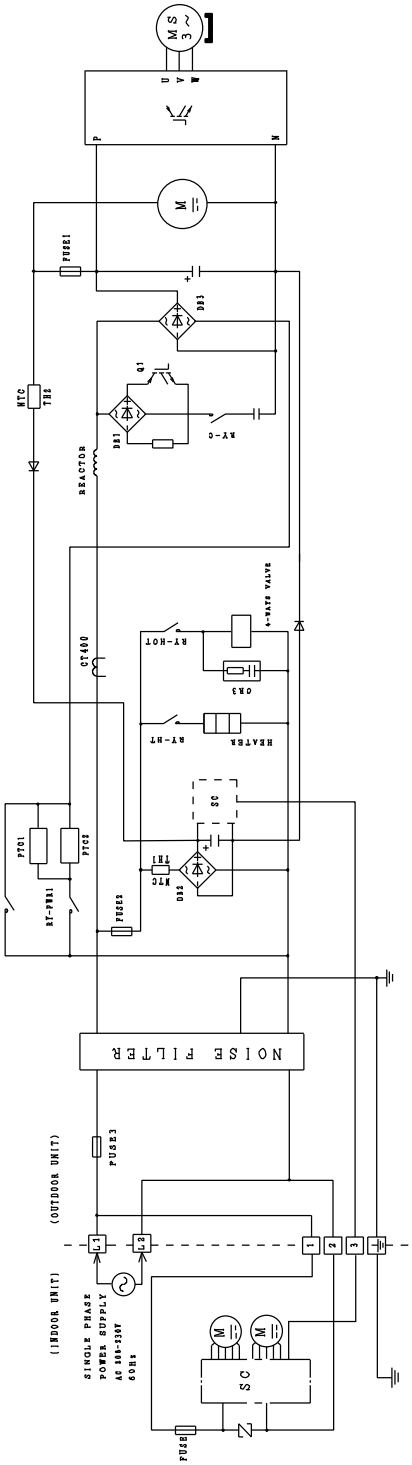

8. Wiring Connection Diagram

8.1 Indoor Unit

8.1.1 CS-E9RKUAW CS-E12RKUAW

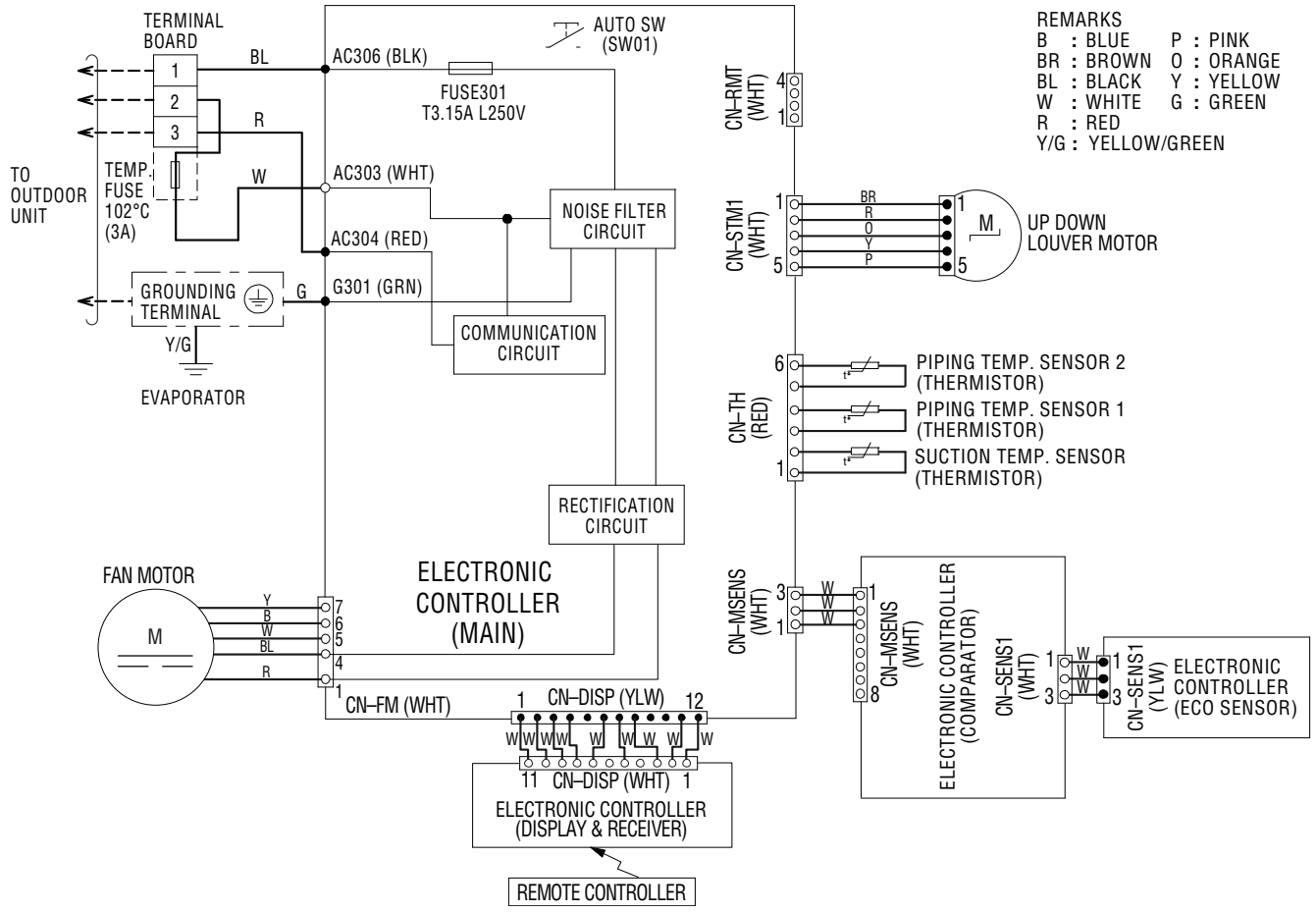

8.1.2 CS-E18RKUAW CS-E24RKUAW

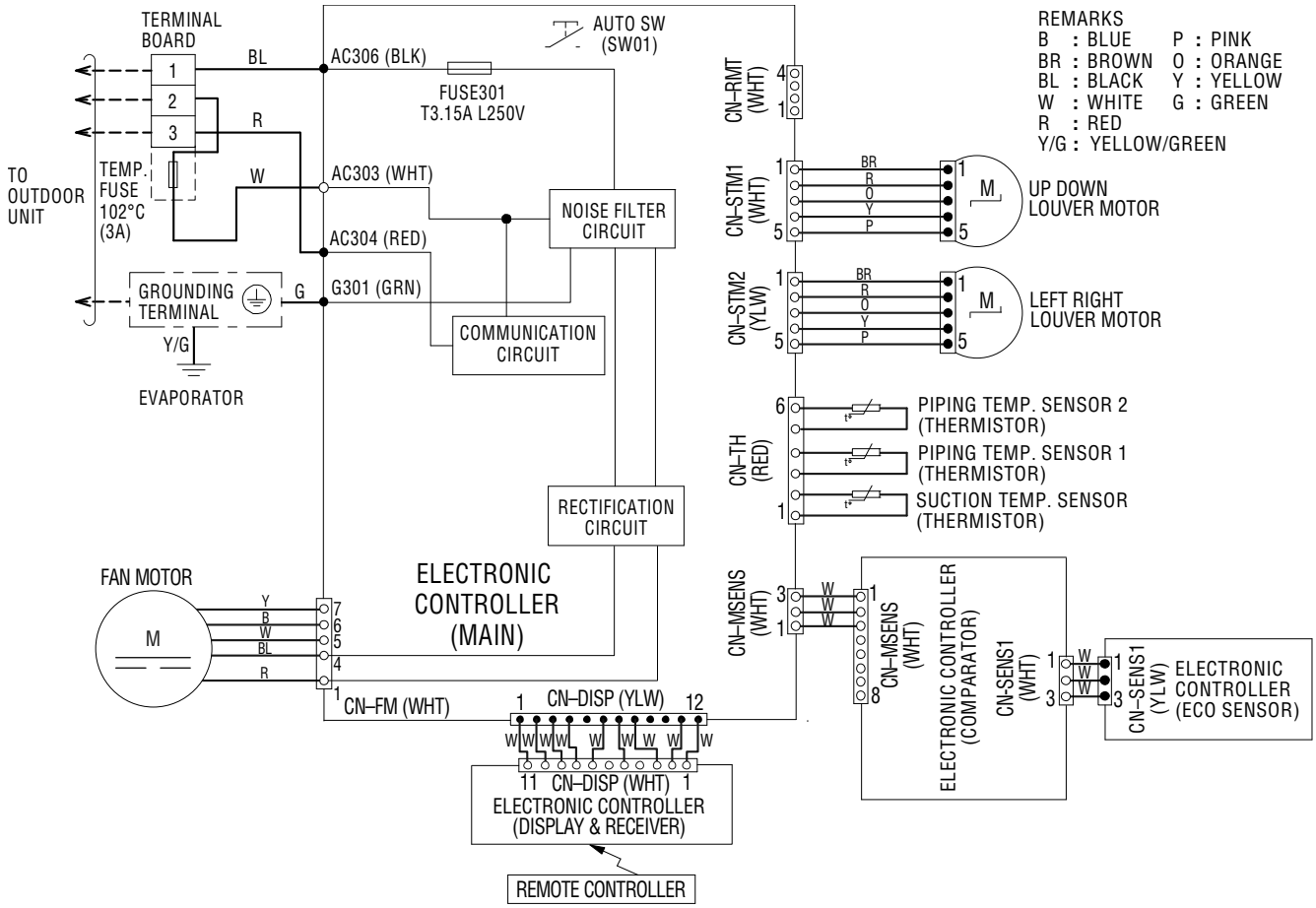

8.2 Outdoor Unit

8.2.1 CU-E9RKUA CU-E12RKUA

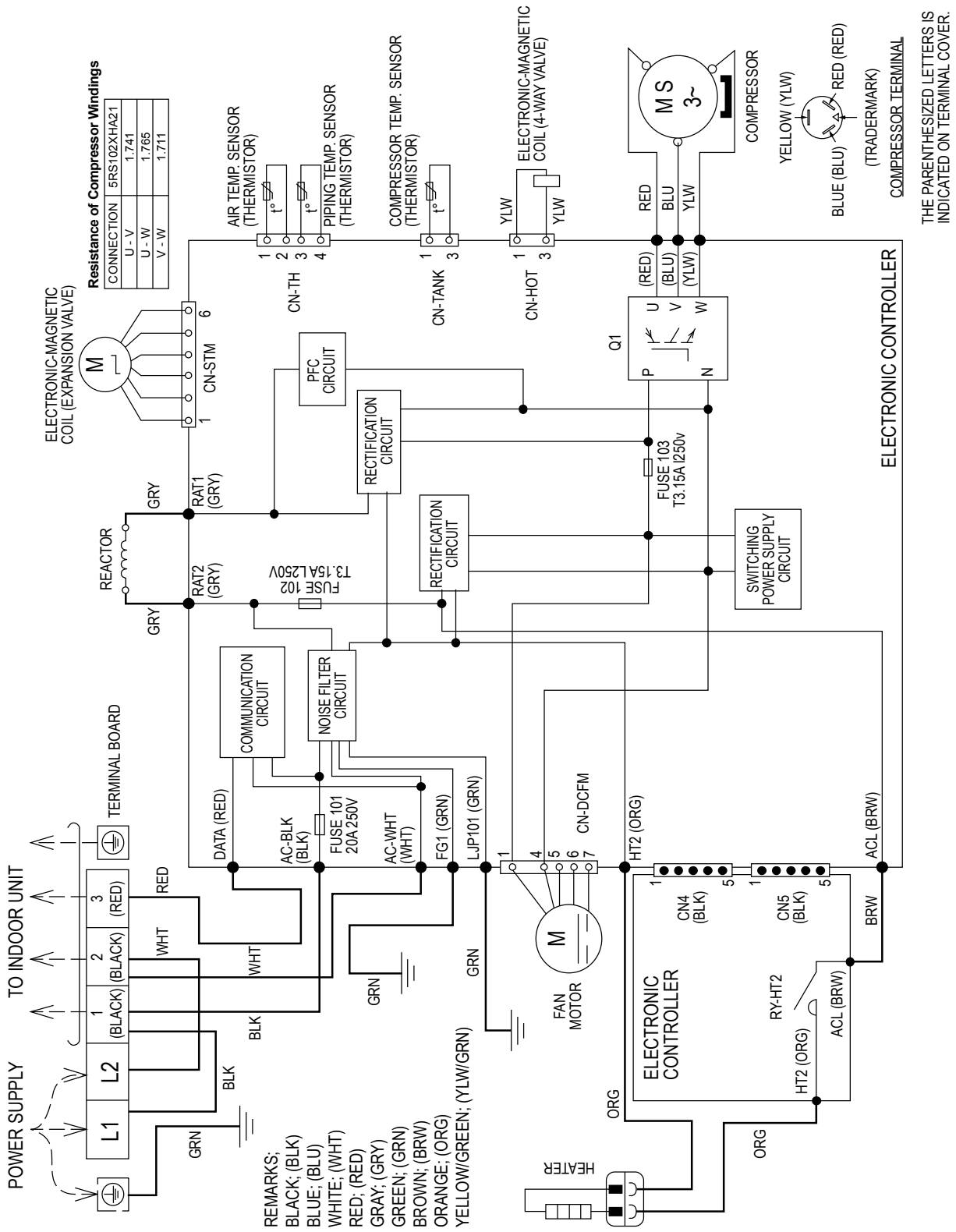

8.2.2 CU-E18RKUA CU-E24RKUA

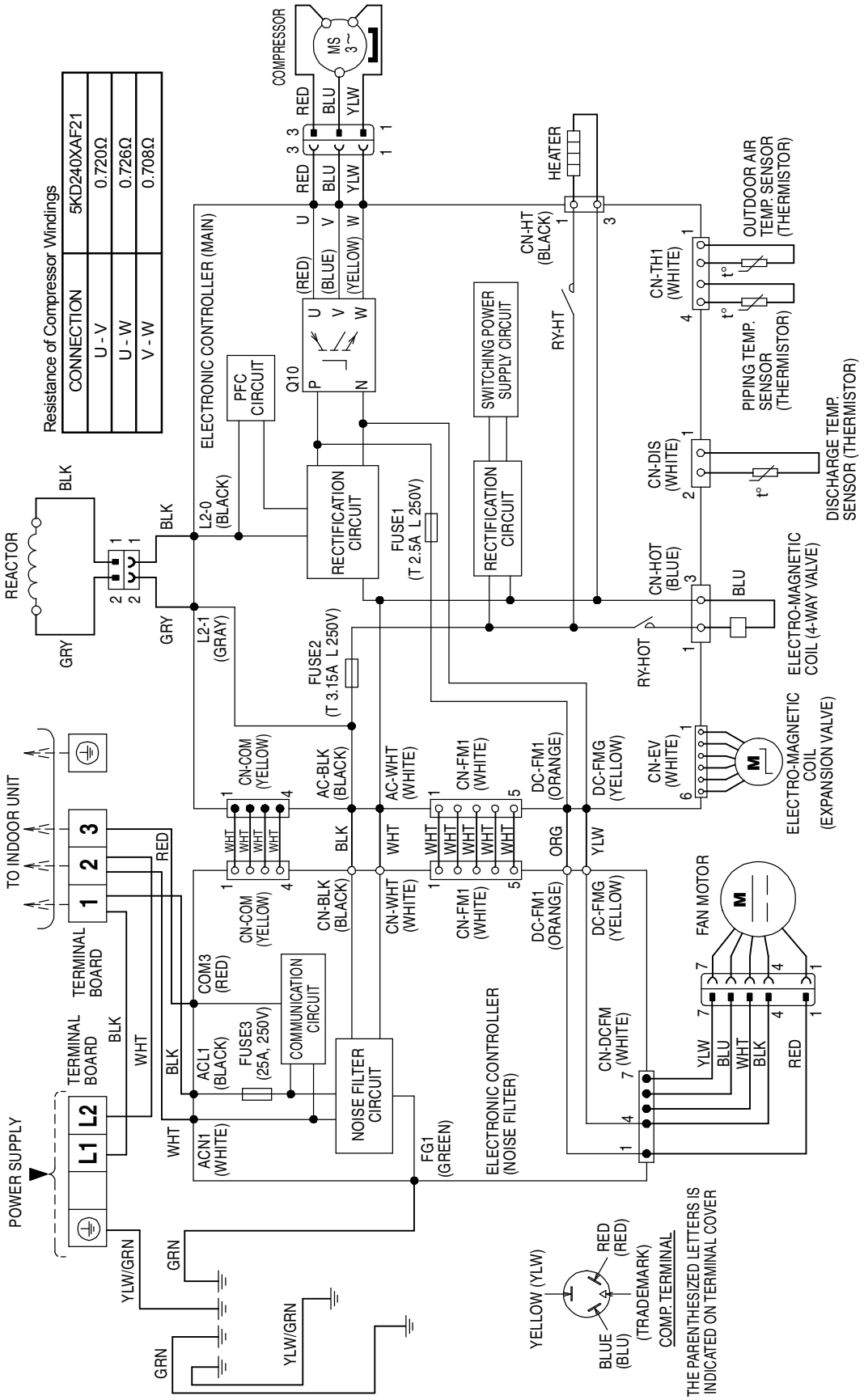

9. Electronic Circuit Diagram

9.1 Indoor Unit

9.1.1 CS-E9RKUAW CS-E12RKUAW

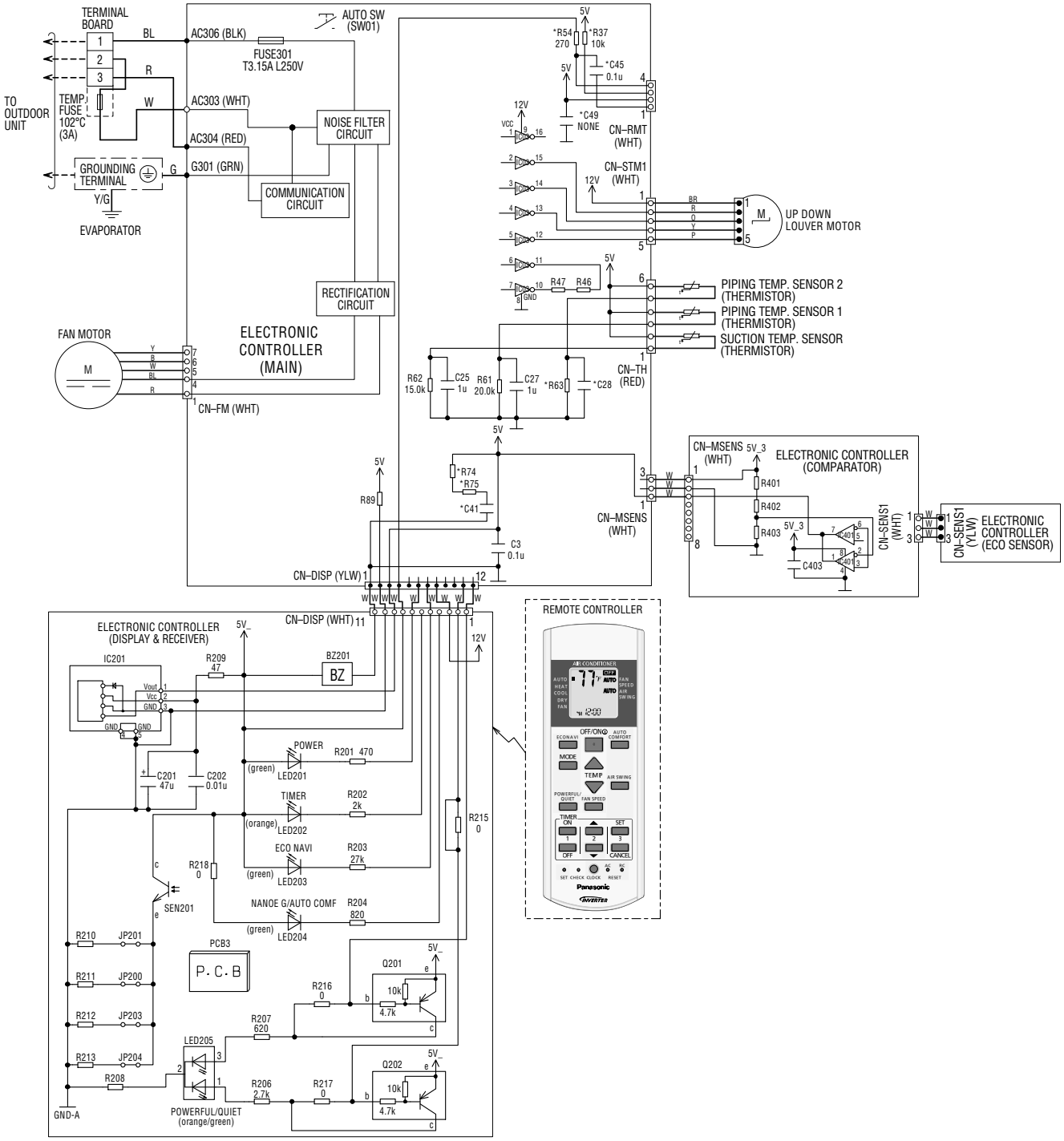

9.1.2 CS-E18RKUAW CS-E24RKUAW

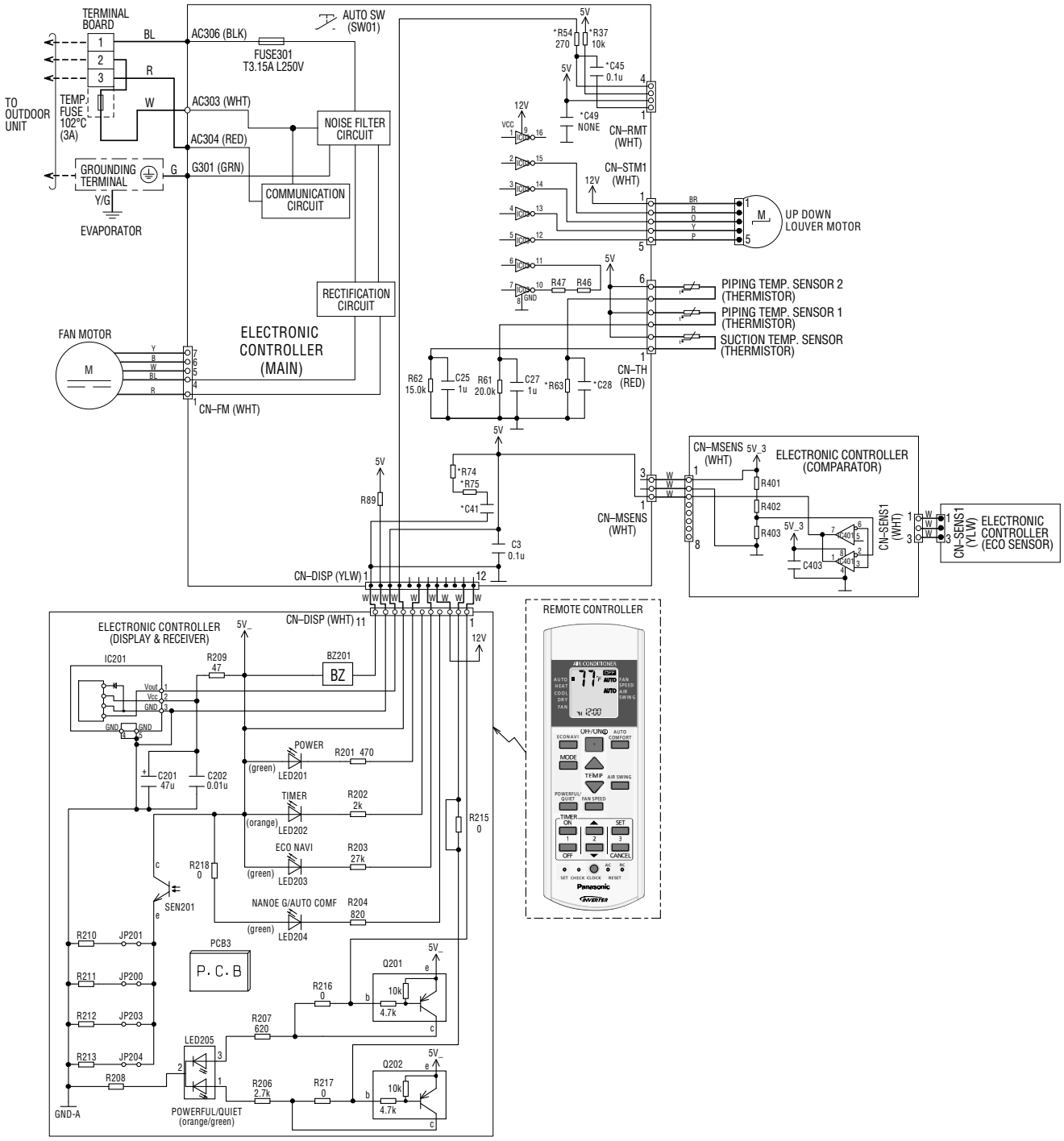

9.2 Outdoor Unit

9.2.1 CU-E9RKUA CU-E12RKUA

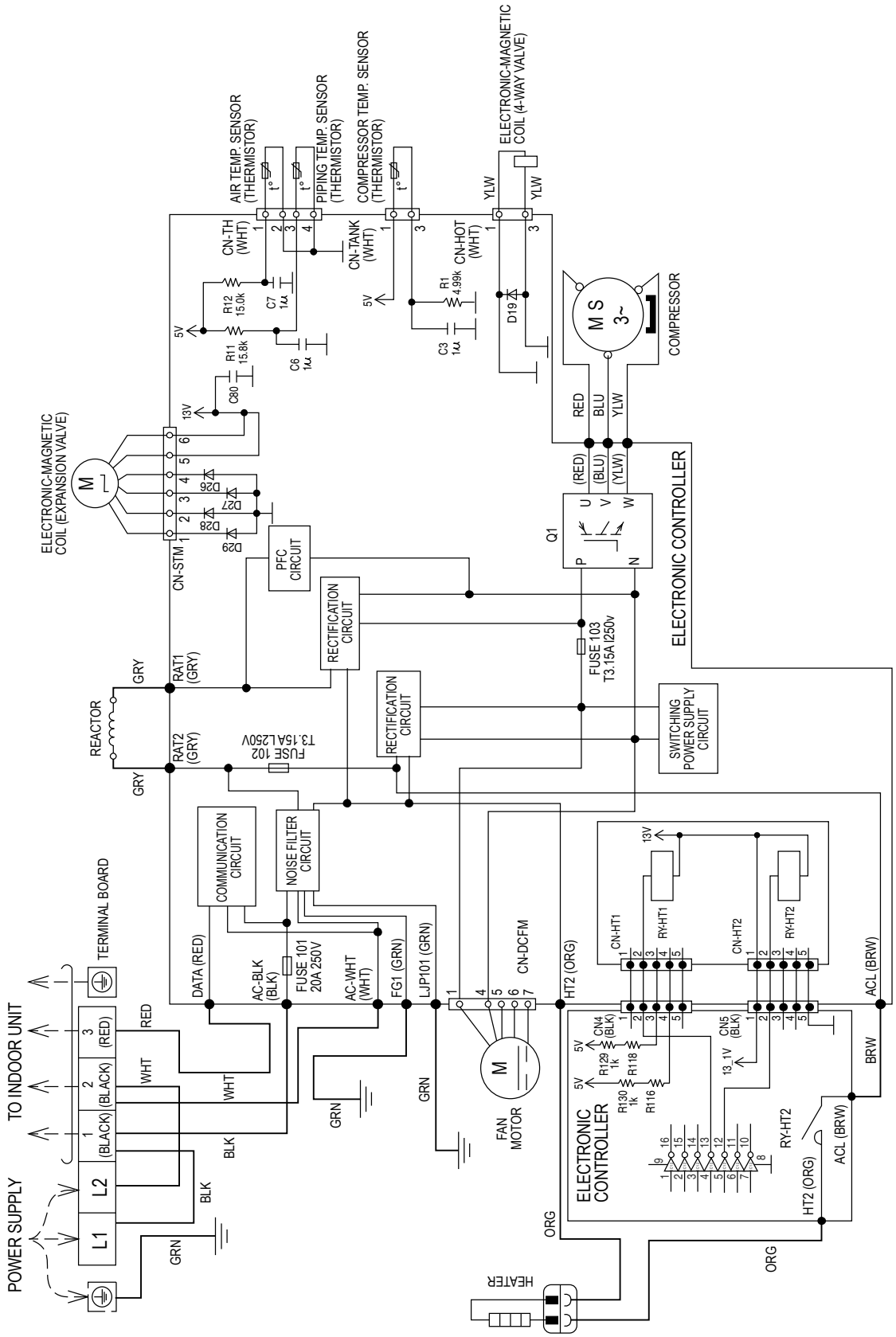

9.2.2 CU-E18RKUA CU-E24RKUA

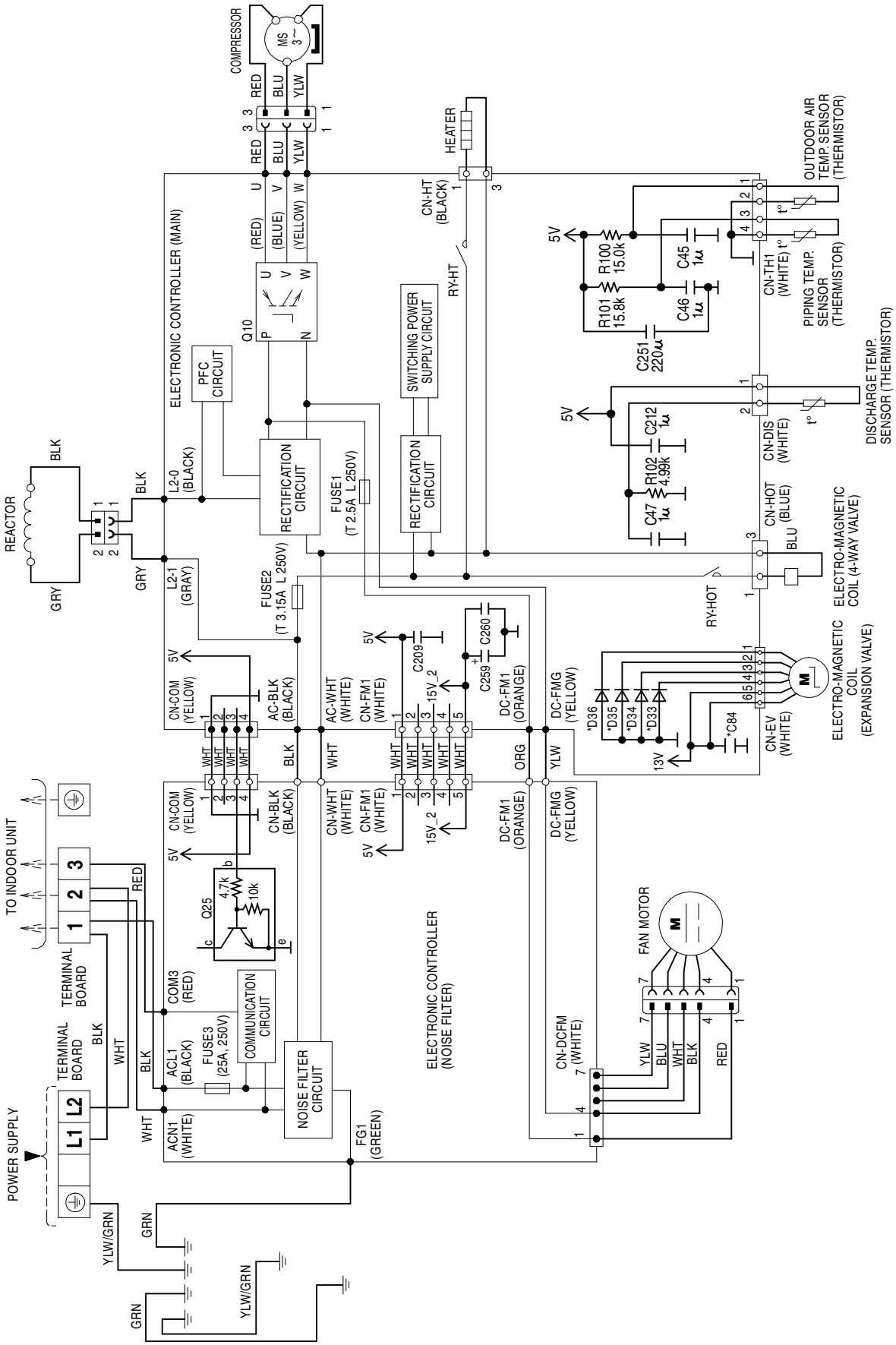

10. Printed Circuit Board

10.1 Indoor Unit

10.1.1 Main Printed Circuit Board

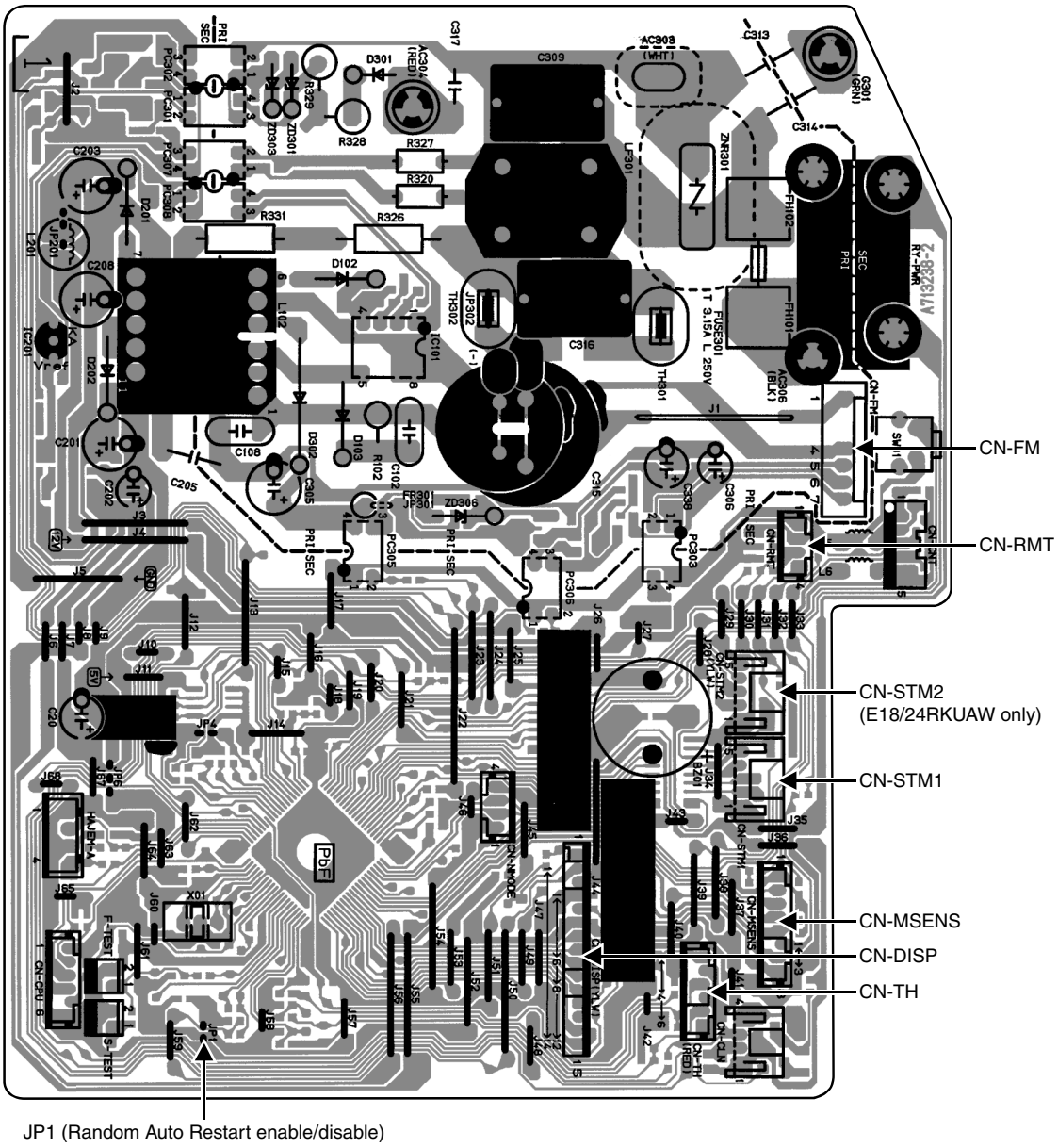

10.1.2 Indicator Printed Circuit Board

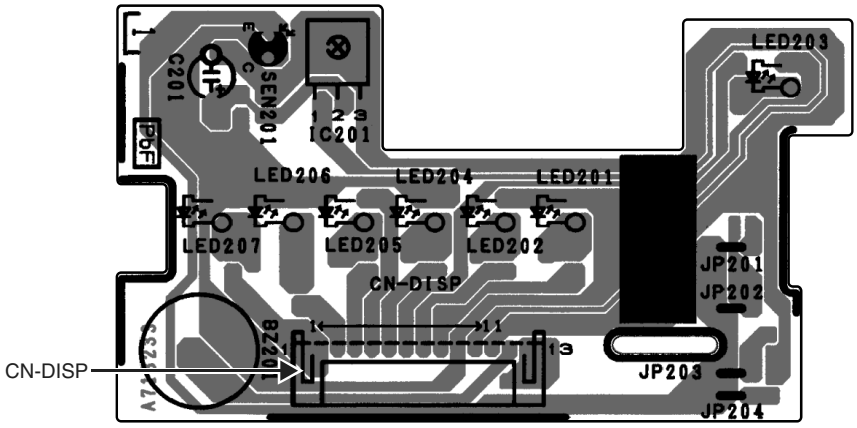

10.1.3 Comparator Printed Circuit Board

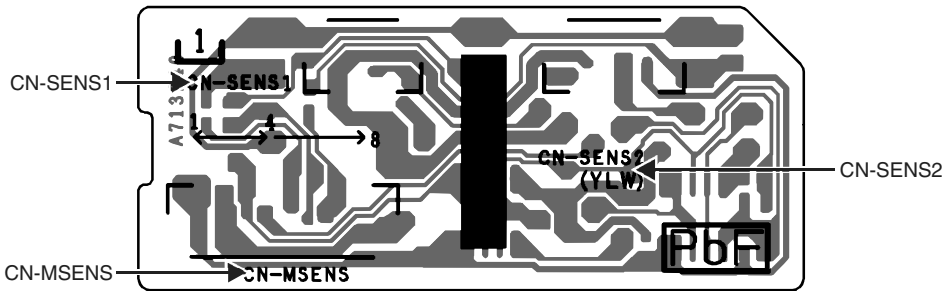

10.2 Outdoor Unit

10.2.1 Main Printed Circuit Board

10.2.1.1 CU-E9RKUA CU-E12RKUA

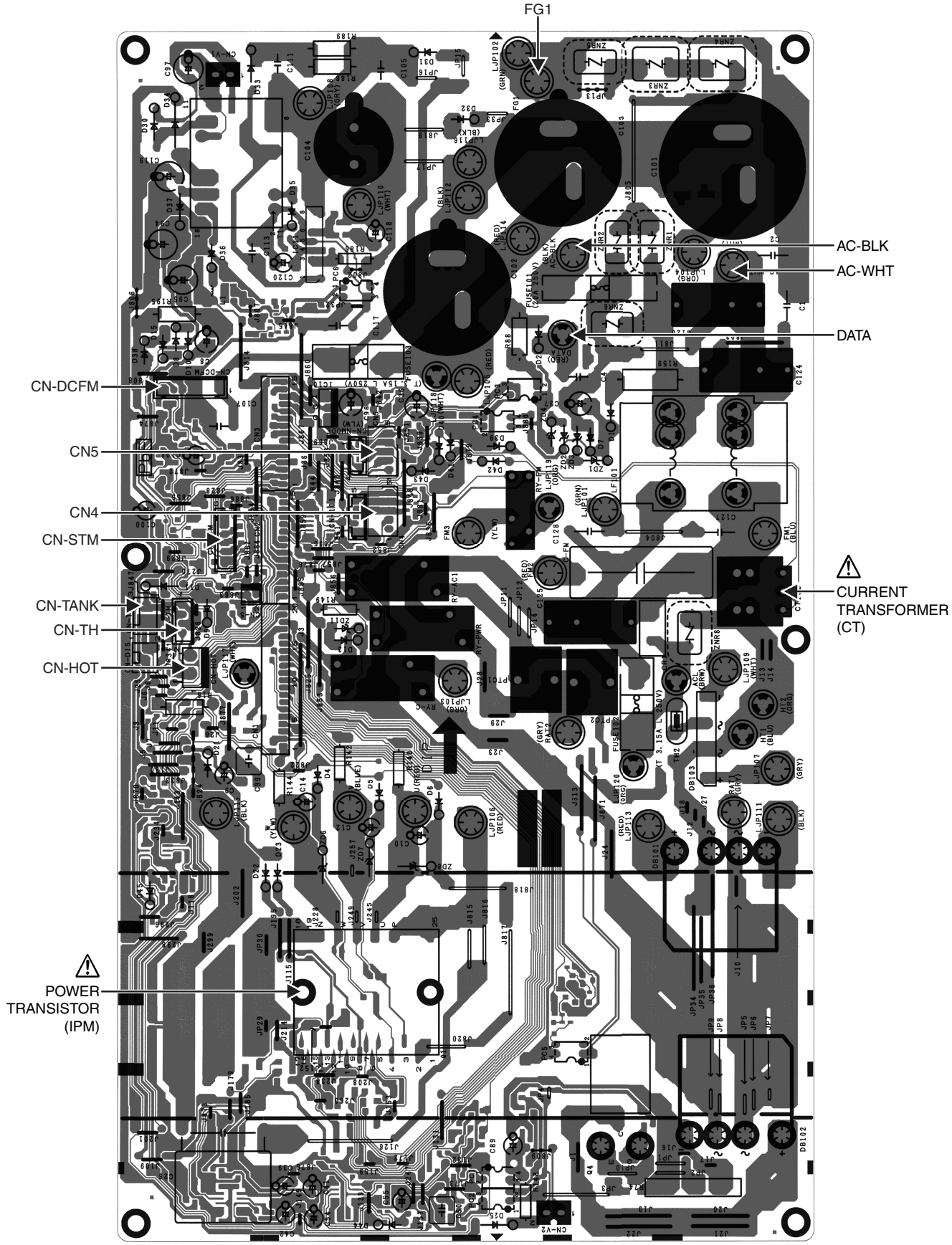

10.2.1.2 CU-E18RKUA CU-E24RKUA

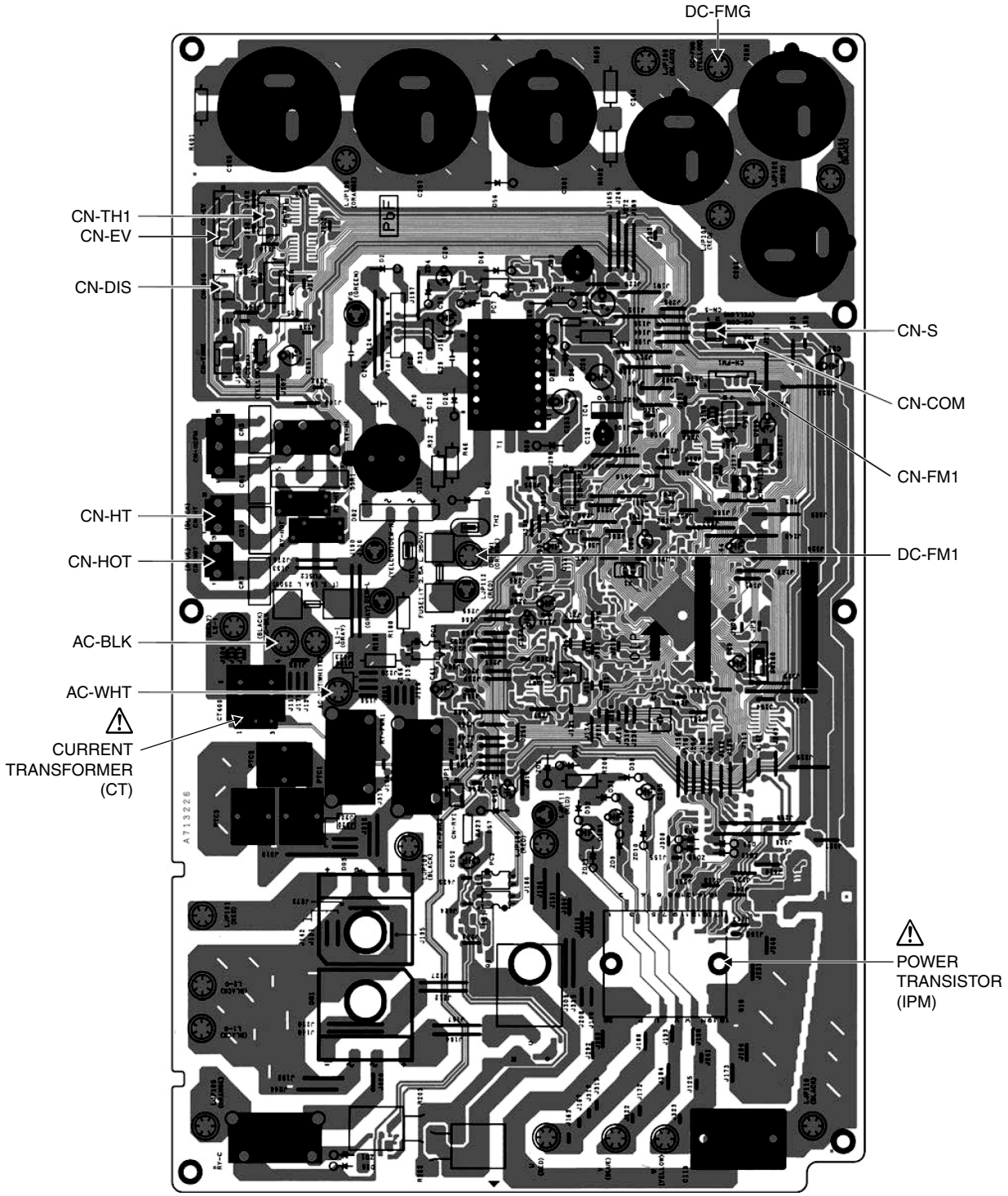

10.2.2 Noise Filter Printed Circuit Board

10.2.2.1 CU-E18RKUA CU-E24RKUA

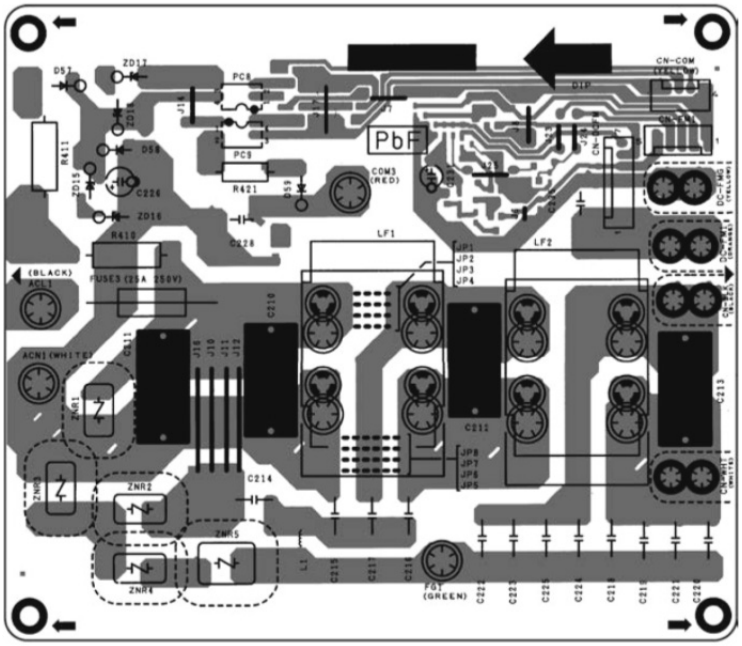

11. Installation Instruction (E9RK and E12RK)

11.1 Select the Best Location

11.1.1 Indoor Unit

- Do not install the unit in excessive oil fume area such as kitchen, workshop and etc.
- There should not be any heat source or steam near the unit.
- There should not be any obstacles blocking the air circulation.
- A place where air circulation in the room is good.
- A place where drainage can be easily done.
- A place where noise prevention is taken into consideration.
- Do not install the unit near the door way.
- Ensure the spaces indicated by arrows from the wall, ceiling, fence or other obstacles.
- Recommended installation height for indoor unit shall be at least 8 ft (2.4 m).

11.1.2 Outdoor Unit

- If an awning is built over the unit to prevent direct sunlight or rain, be careful that heat radiation from the condenser is not obstructed.
- There should not be any animal or plant which could be affected by hot air discharged.
- Keep the spaces indicated by arrows from wall, ceiling, fence or other obstacles.
- Do not place any obstacles which may cause a short circuit of the discharged air.
- If piping length is over the [piping length for additional gas], additional refrigerant should be added as shown in the table.
- Recommended installation height for outdoor unit should be above the seasonal snow level.

Model	Capacity (Btu/h)	Piping size		Std. Length	Max. Elevation	Min. Piping Length	Max. Piping Length	Additional Refrigerant	Piping Length for add. gas
		Gas	Liquid						
E9RKUAW	9000	3/8" (9.52 mm)	1/4" (6.35 mm)	24.6 ft (7.5 m)	49.2 ft (15 m)	9.8 ft (3 m)	65.6 ft (20 m)	0.2 oz/ft (20 g/m)	24.6 ft (7.5 m)
E12RKUAW	11500	1/2" (12.7 mm)							

Example: For E9RKUAW
If the unit is installed at 32.8 ft (10 m) distance, the quantity of additional refrigerant should be 1.64 oz (50 g) .... (32.8 - 24.6) ft x 0.2 oz/ft = 1.64 oz.
((10 -7.5) m x 20 g/m = 50 g).

11.1.3 Indoor/Outdoor Unit Installation Diagram

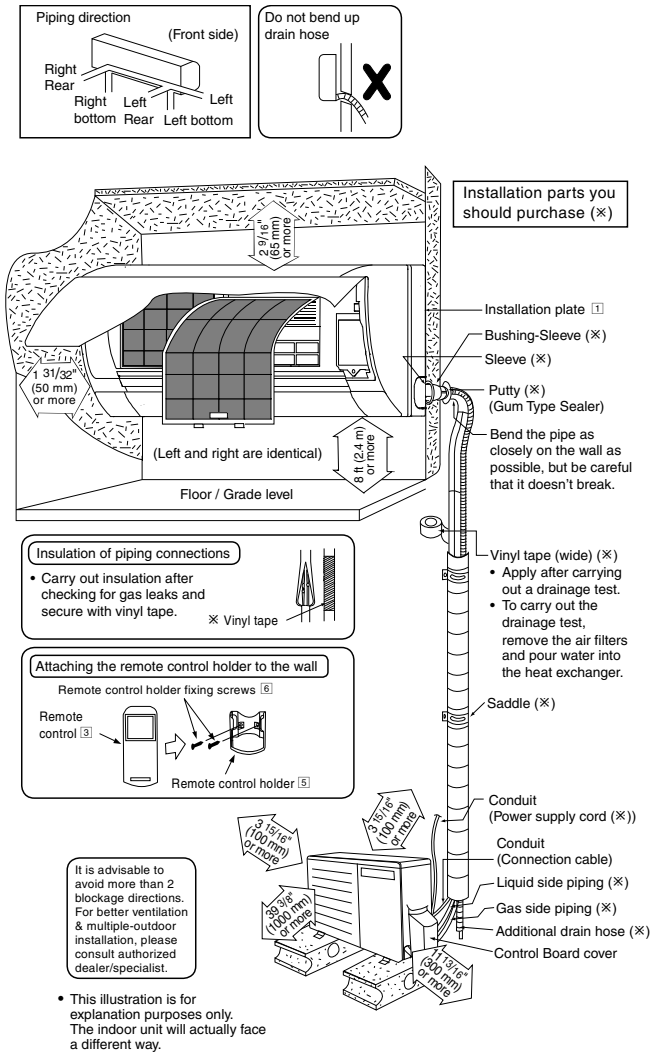

11.2 Indoor Unit

11.2.1 How to Fix Installation Plate

The mounting wall shall be strong and solid enough to prevent it from the vibration.

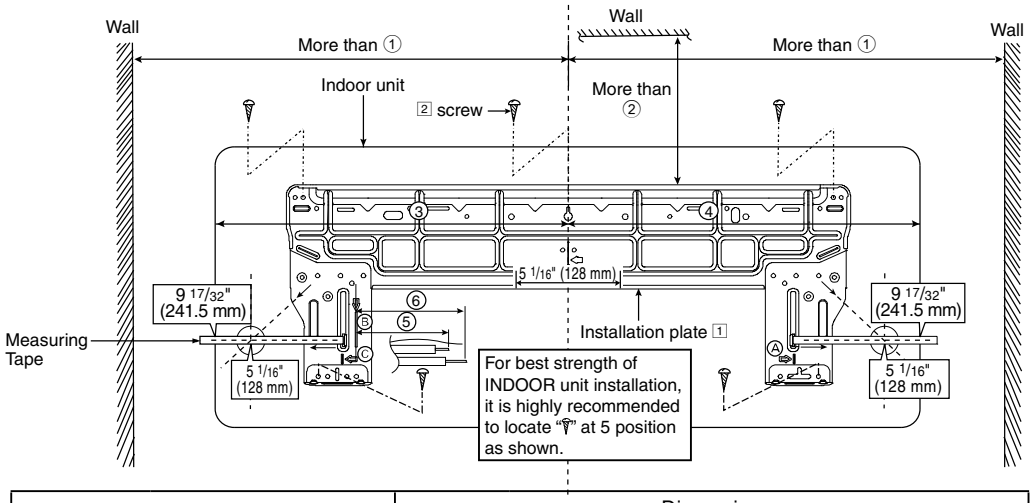

Model	Dimension					
	①	②	③	④	⑤	⑥
E9RKUAW, E12RKUAW	19 9/32" (490 mm)	3 7/32" (82 mm)	17 9/32" (439 mm)	17" (432 mm)	1 11/16" (43 mm)	3 3/4" (95 mm)

The center of installation plate should be at more than ① at right and left of the wall.
The distance from installation plate edge to ceiling should more than ②.
From installation plate left edge to unit's left side is ③.
From installation plate right edge to unit's right side is ④.

Ⓑ : For left side piping, piping connection for liquid should be about ⑤ from this line.
: For left side piping, piping connection for gas should be about ⑥ from this line.

1 Mount the installation plate on the wall with 5 screws or more (at least 5 screws).
(If mounting the unit on the concrete wall, consider using anchor bolts.)
- Always mount the installation plate horizontally by aligning the marking-off line with the thread and using a level gauge.

2 Drill the piping plate hole with ø2 3/4" (ø70 mm) hole-core drill.
- Line according to the left and right side of the installation plate. The meeting point of the extended line is the center of the hole. Another method is by putting measuring tape at position as shown in the diagram above. The hole center is obtained by measuring the distance namely 5 1/16" (128 mm) for left and right hole respectively.
- Drill the piping hole at either the right or the left and the hole should be slightly slanting to the outdoor side.

11.2.2 To Drill a Hole in the Wall and Install a Sleeve of Piping

1 Insert the piping sleeve to the hole.
2 Fix the bushing to the sleeve.
3 Cut the sleeve until it extrudes about 19/32" (15 mm) from the wall.

> ⚠ CAUTION
>
> When the wall is hollow, please be sure to use the sleeve for tube assembly to prevent dangers caused by mice biting the connection cable.

4 Finish by sealing the sleeve with putty or caulking compound at the final stage.

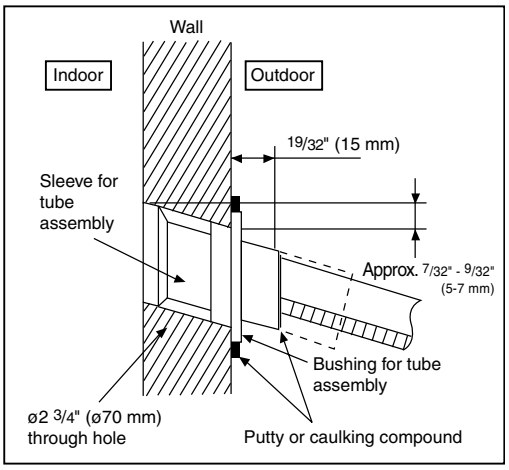

11.2.3 Indoor Unit Installation

Do not turn over the unit without it's shock absorber during pull out the piping.
It may cause intake grille damage.
Use shock absorber during pull out the piping to protect the intake grille from damage.

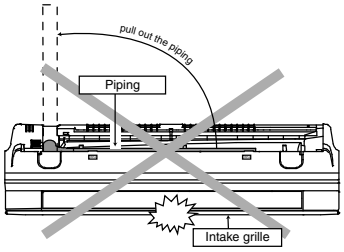

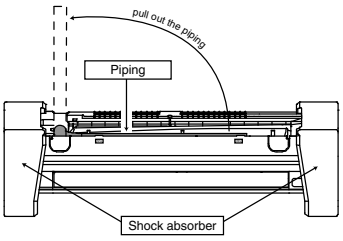

11.2.3.1 For the right rear piping

Step-1	Pull out the Indoor piping
Step-2	Install the Indoor Unit
Step-3	Secure the Indoor Unit
Step-4	Insert the connection cable

11.2.3.2 For the right bottom piping

Step-1	Pull out the Indoor piping
Step-2	Install the Indoor Unit
Step-3	Insert the connection cable
Step-4	Secure the Indoor Unit

11.2.3.3 For the embedded piping

Step-1	Replace the drain hose
Step-2	Bend the embedded piping
	• Use a spring bender or equivalent to bend the piping so that the piping is not crushed.
Step-3	Pull the connection cable into Indoor Unit
	• The inside and outside connection cable can be connected without removing the front grille.
Step-4	Cut and flare the embedded piping
	• When determining the dimensions of the piping, slide the unit all the way to the left on the installation plate. • Refer to the section "Cutting and flaring the piping".
Step-5	Install the Indoor Unit
Step-6	Connect the piping
	• Please refer to "Connecting the piping" column in outdoor unit section. (Below steps are done after connecting the outdoor piping and gas-leakage confirmation.)
Step-7	Insulate and finish the piping
	• Please refer to "Insulation of piping connection" column as mentioned in indoor/outdoor unit installation.
Step-8	Secure the Indoor Unit

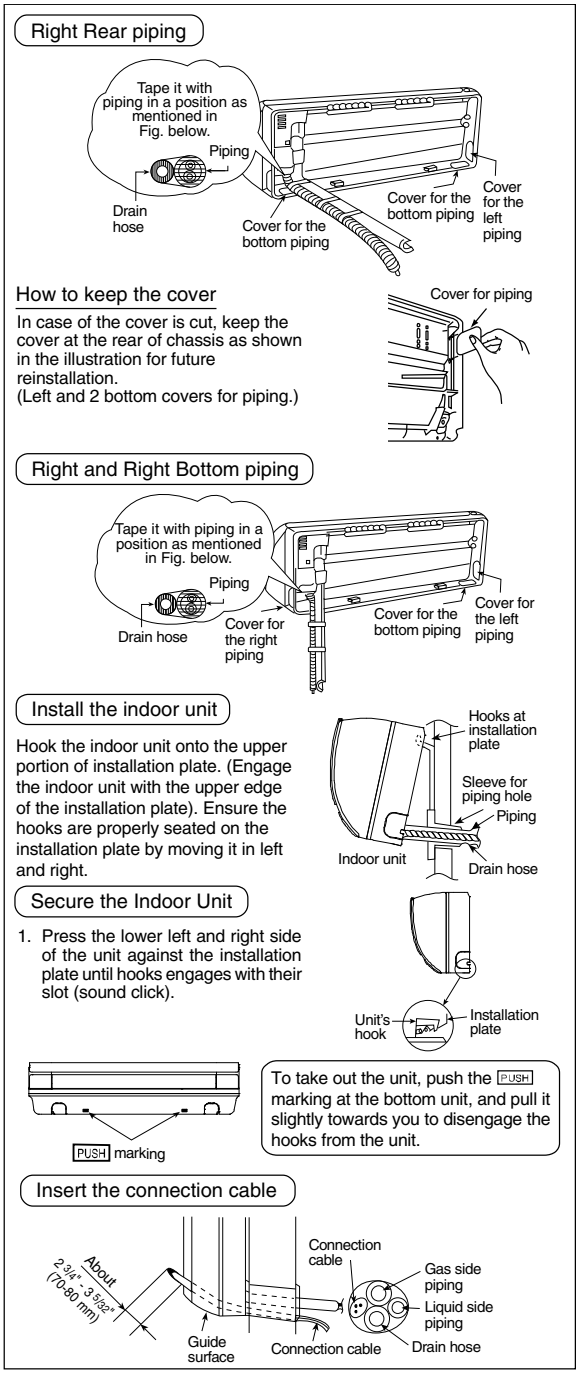

(This can be used for left rear piping and bottom piping also.)

Replace the drain hose

Rear view for left piping installation

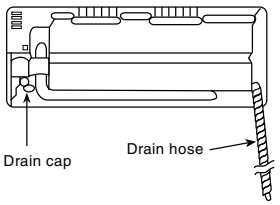

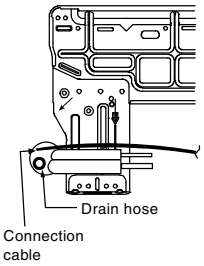

Adjust the piping slightly downwards.

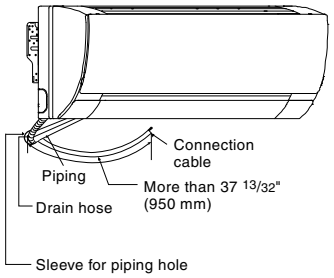

- How to pull the piping and drain hose out, in case of embedded piping.

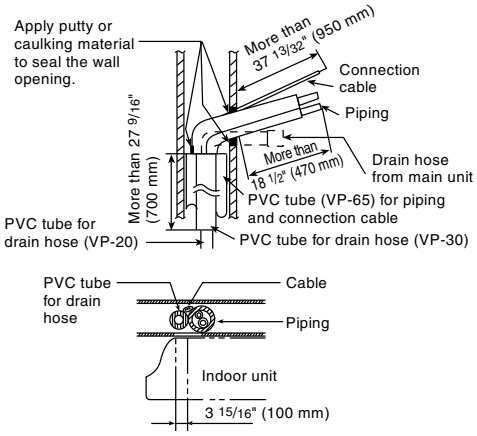

- How to insert the connection cable and drain hose in the case of left piping.

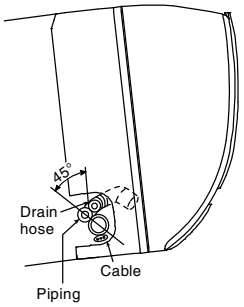

(For right piping, follow the same procedure)

Drain hose adapter 9 usage

- Join indoor drain hose to 3/4" (20 mm) nominal PVC pipe size by using drain hose adapter 9 when necessary.

Remarks :
Make sure indoor unit drain hose & 3/4" (20 mm) nominal PVC pipe are fully inserted to drain hose adapter 9.

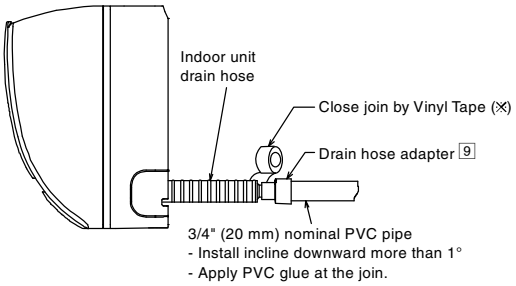

11.2.4 Connect the Cable to the Indoor Unit

1. The inside and outside connection cable can be connected without removing the front grille.
2. Unscrew the conduit cover and fix the conduit connector to conduit cover with lock nut, then secure it against chassis.
3. Connection cable between indoor unit and outdoor unit should be UL listed or CSA approved 4 conductor wires minimum AWG16 in accordance with local electric codes.
4. Connection cable between indoor unit and outdoor unit should be UL listed or CSA approved 4 conductor wires minimum AWG16 in accordance with local electric codes.
   - Ensure the colour of wires of outdoor unit and terminal number are the same as the indoor's repectively.

Terminals on the indoor unit	1	2	3	⏚
Colour of wires (connection cable)				
Terminals on the outdoor unit	1	2	3	⏚

⚠ WARNING

⏚ This equipment must be properly earthed.

- Earth lead wire shall be Yellow/Green (Y/G) in colour and shall be longer than other lead wires as shown in the figure for electrical safety in case of the slipping.

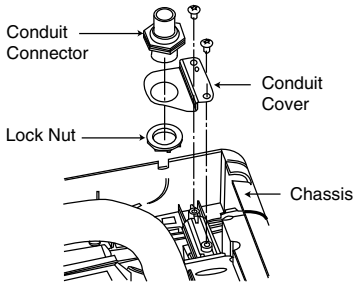

Rear Side of Indoor Unit

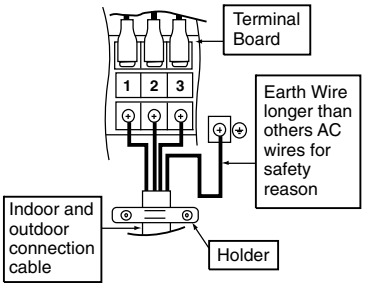

11.2.5 Wiring Stripping and connecting requirement

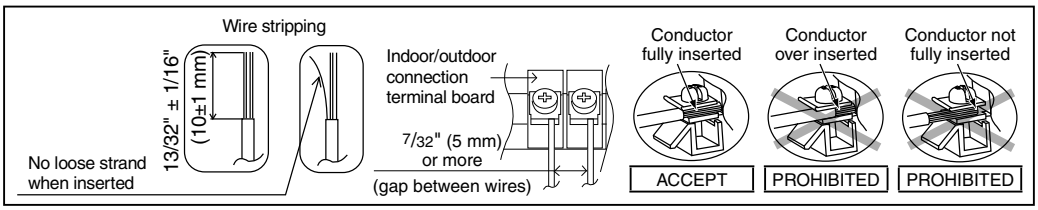

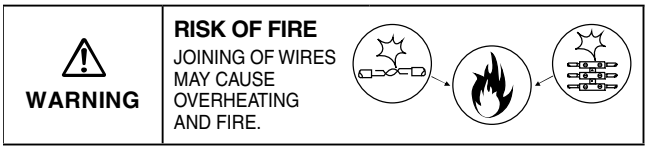

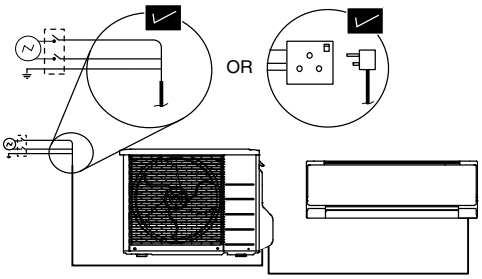

Do not joint wires

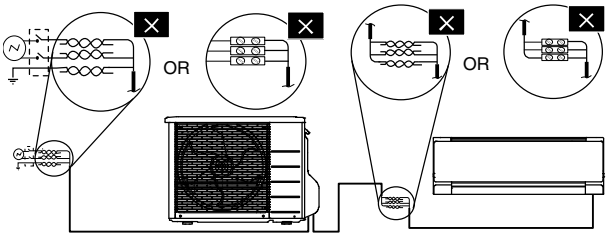

- Use complete wire without joining.
- Use approved socket and plug with earth pin.
- Wire connection in this area must follow to national wiring rules.

11.2.5.1 Cutting and flaring the piping

1 Please cut using pipe cutter and then remove the burrs.
2 Remove the burrs by using reamer. If burrs are not removed, gas leakage may be caused. Turn the piping end down to avoid the metal powder entering the pipe.
3 Please make flare after inserting the flare nut onto the copper pipes.

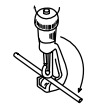

1. To cut

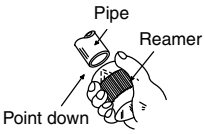

2. To remove burrs

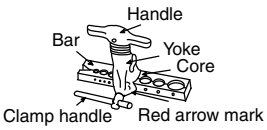

3. To flare

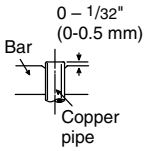

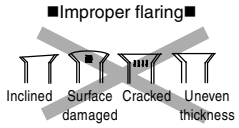

When properly flared, the internal surface of the flare will evenly shine and be of even thickness. Since the flare part comes into contact with the connections, carefully check the flare finish.

11.3 Outdoor Unit

11.3.1 Install the Outdoor Unit

- After selecting the best location, start installation according to indoor/outdoor unit installation diagram.
  1 Fix the unit on concrete or rigid frame firmly and horizontally by bolt nut (ø13/32" (ø10 mm)).
  2 When installing at roof, please consider strong wind and earthquake.
  Please fasten the installation stand firmly with bolt or nails.

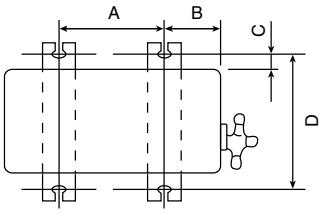

Model	A	B	C	D
E9RKUA, E12RKUA	22-7/16" (570 mm)	4-1/8" (105 mm)	23/32" (18.5 mm)	12-19/32" (320 mm)

11.3.2 Connect the Piping

11.3.2.1 Connecting the piping to indoor

Please make flare after inserting flare nut (locate at joint portion, of tube assembly) onto the copper pipe. (In case of using long piping)

Connect the piping
- Align the center of piping and sufficiently tighten the flare nut with fingers.
- Further tighten the flare nut with torque wrench in specified torque as stated in the table.

Do not over tighten, over tightening may cause gas leakage.	
Piping size	Torque
1/4" (6.35 mm)	13.3 lbf.ft [18 N•m (1.8 kgf•m)]
3/8” (9.52 mm)	31.0 lbf.ft [42 N•m (4.3 kgf•m)]
1/2" (12.7 mm)	40.6 lbf.ft [55 N•m (5.6 kgf•m)]
5/8” (15.88 mm)	47.9 lbf.ft [65 N•m (6.6 kgf•m)]
3/4" (19.05 mm)	73.8 lbf.ft [100 N•m (10.2 kgf•m)]

11.3.2.2 Connecting the piping to outdoor

Decide piping length and then cut by using pipe cutter.
Remove burrs from cut edge.
Make flare after inserting the flare nut (locate at valve) onto the copper pipe.
Align center of piping to valves and then tighten with torque wrench to the specified torque as stated in the table.

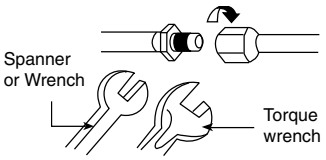

11.3.2.3 Connecting the piping to outdoor multi

Decide piping length and then cut by using pipe cutter. Remove burrs from cut edge.
Make flare after inserting the flare nut (locate at valve) onto the copper pipe.
Align center of piping to valve and then tighten with torque wrench to the specified torque as stated in the table.

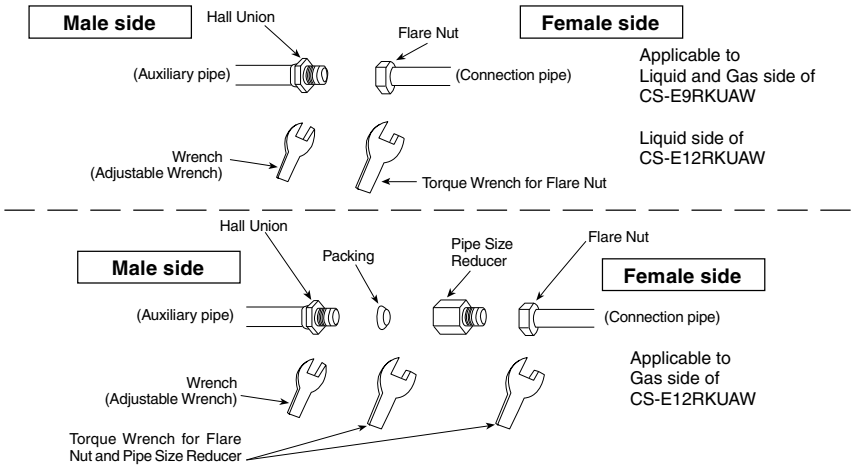

11.3.2.4 Gas Leak Checking

Pressure test to system to 400 PSIG with dry nitrogen, in stages. Thoroughly leak check the system.
If the pressure holds, release the nitrogen and proceed to section 11.3.3.

11.3.3 Evacuation of the equipment

WHEN INSTALLING AN AIR CONDITIONER, BE SURE TO EVACUATE THE AIR INSIDE THE INDOOR UNIT AND PIPES in the following procedures.

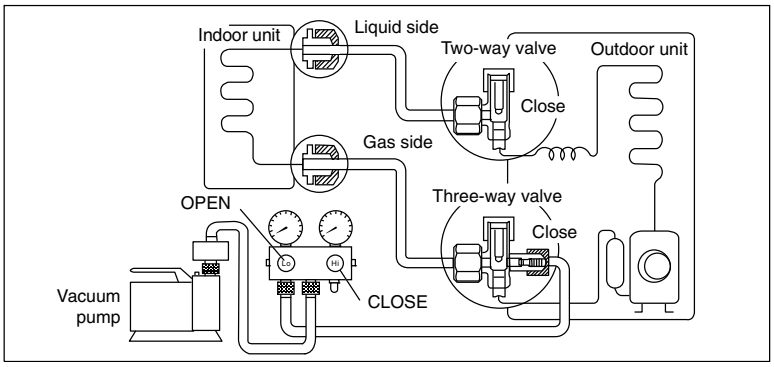

1. Connect a charging hose with a push pin to the Low side of a charging set and the service port of the 3-way valve.
2. Connect the micron gauge between vacuum pump and service port of outdoor units.
3. Turn on the power switch of the vacuum pump and make sure that connect digital micron gauge and to pull down to a value of 500 microns.
4. To make sure micron gauge a value 500 microns and close the low side valve of the charging set and turn off the vacuum pump.
5. Disconnect the vacuum pump house from the service port of the 3-way valve.
6. Tighten the service port caps of the 3-way valve at a torque of 13.3 lbf.ft (18 N•m) with a torque wrench.
7. Remove the valve caps of both of the 2-way valve and 3-way valve. Position both of the valves to “Open” using a hexagonal wrench (5/32" (4 mm)).
8. Mount valve caps onto the 2-way valve and the 3-way valve.
   - Be sure to check for gas leakage.

- If micron gauge value does not descend 500 microns, take the following measures:
- If the leak stops when the piping connections are tightened further, continue working from step ③.
- If the leak does not stop when the connections are retightened, repair location of leak.
- Do not release refrigerant during piping work for installation and reinstallation.
- Be careful with the liquid refrigerant, it may cause frostbite.

11.3.3.1 Connect the Cable to the Outdoor Unit

1. Remove Top panel.
2. Remove Control Board Cover (Resin and Metal).
3. Remove Plugs.
4. Fix the conduit connectors to the knockout holes with lock-nuts, then secure them against the side panel.
5. All wires pass through conduits.
6. Connection cable between indoor unit and outdoor unit should be UL listed or CSA approved 4 conductor wires minimum AWG16 in accordance with local electric codes.
7. Wire connection to the power supply (208/230V 60Hz) through circuit breaker.
   - Connect the UL listed or CSA approved wires minimum AWG14 to the terminal board, and connect the other end of the wires to ELCB / GFCI.
8. Connect the power supply cord and connection cable between indoor unit and outdoor unit according to the diagram below.

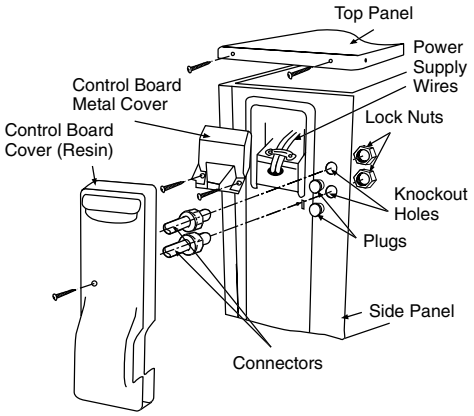

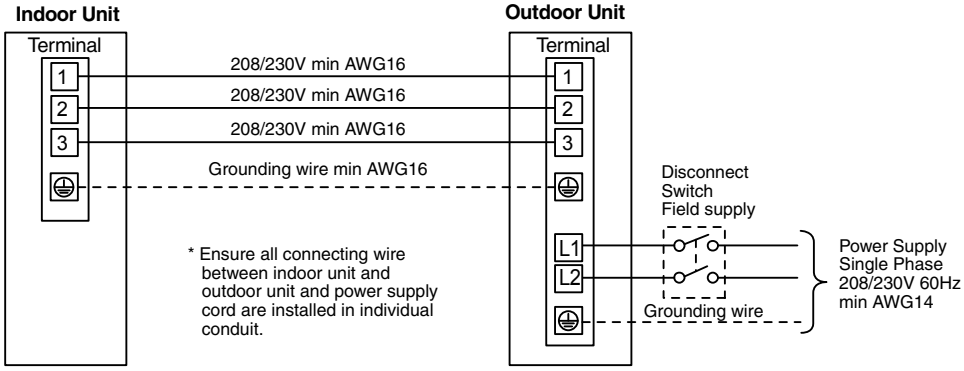

9. Secure the wire onto the control board with the holder (clamper).
10. After completing wiring connections, reattach the control board cover (Metal and Resin) and the top panel to the original position with the screws.
11. For wire stripping and connection requirement, refer to instruction 11.2.5 of indoor unit.

⚠ WARNING
This equipment must be properly earthed.

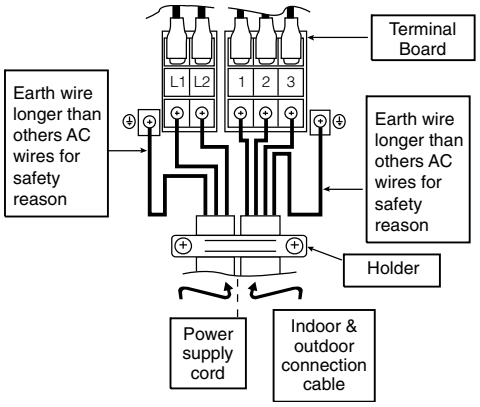

- Earth lead wire shall be Yellow/Green (Y/G) in colour and shall be longer than other lead wires as shown in the figure for electrical safety in case of the slipping.

11.3.3.2 Piping Insulation

1. Please carry out insulation at pipe connection portion as mentioned in Indoor/Outdoor Unit Installation Diagram. Please wrap the insulated piping end to prevent water from going inside the piping.
2. If drain hose or connecting piping is in the room (where dew may form), please increase the insulation by using POLY-E FOAM with thickness 1/4" (6 mm) or above.

12. Installation Instruction (E18RK and E24RK)

12.1 Select the Best Location

12.1.1 Indoor Unit

- Do not install the unit in excessive oil fume area such as kitchen, workshop and etc.
- There should not be any heat source or steam near the unit.
- There should not be any obstacles blocking the air circulation.
- A place where air circulation in the room is good.
- A place where drainage can be easily done.
- A place where noise prevention is taken into consideration.
- Do not install the unit near the door way.
- Ensure the spaces indicated by arrows from the wall, ceiling, fence or other obstacles.
- Recommended installation height for indoor unit shall be at least 8 ft (2.4 m).

12.1.2 Outdoor Unit

- If an awning is built over the unit to prevent direct sunlight or rain, be careful that heat radiation from the condenser is not obstructed.
- There should not be any animal or plant which could be affected by hot air discharged.
- Keep the spaces indicated by arrows from wall, ceiling, fence or other obstacles.
- Do not place any obstacles which may cause a short circuit of the discharged air.
- If piping length is over the [piping length for additional gas], additional refrigerant should be added as shown in the table.
- Recommended installation height for outdoor unit should be above the seasonal snow level.

Model	Capacity (Btu/h)	Piping size		Std. Length	Max. Elevation	Min. Piping Length	Max. Piping Length	Additional Refrigerant	Piping Length for add. gas
		Gas	Liquid						
E18RKUA	17200	1/2" (12.7 mm)	1/4" (6.35 mm)	24.6 ft (7.5 m)	49.2 ft (15 m)	9.8 ft (3 m)	100.0 ft (30.5 m)	0.3 oz/ft (25 g/m)	32.8 ft (10 m)
E24RKUA	24000	5/8" (15.88 mm)							

Example: For E18RKUA
If the unit is installed at 41 ft (12.5 m) distance, the quantity of additional refrigerant should be 2.46 oz (62.5 g) .... (41 - 32.8) ft x 0.3 oz/ft = 2.46 oz.
((12.5 - 10) m x 25 g/m = 62.5 g).

12.1.3 Indoor/Outdoor Unit Installation Diagram

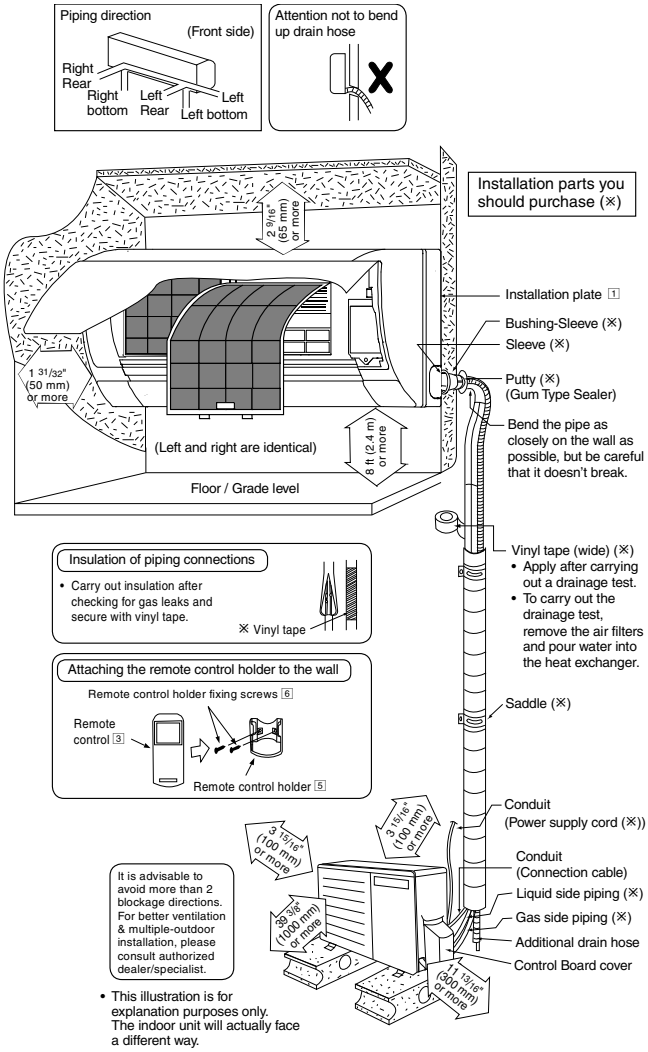

12.2 Indoor Unit

12.2.1 How to Fix Installation Plate

The mounting wall shall be strong and solid enough to prevent it from the vibration.

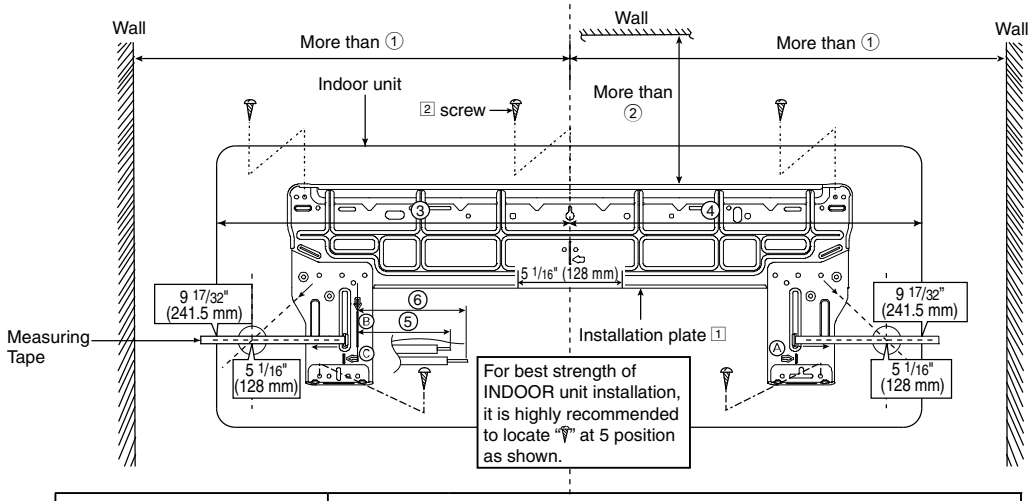

Model	Dimension					
	①	②	③	④	⑤	⑥
E18RKUA, E24RKUA	23 7/32" (590 mm)	3 7/32" (82 mm)	21 7/32" (539 mm)	20 15/16" (532 mm)	6 21/32" (169 mm)	8 5/8" (219 mm)

The center of installation plate should be at more than ① at right and left of the wall.
The distance from installation plate edge to ceiling should more than ②.
From installation plate left edge to unit's left side is ③.
From installation plate right edge to unit's right side is ④.

Ⓑ : For left side piping, piping connection for liquid should be about ⑤ from this line.
: For left side piping, piping connection for gas should be about ⑥ from this line.

1 Mount the installation plate on the wall with 5 screws or more (at least 5 screws).
(If mounting the unit on the concrete wall, consider using anchor bolts.)
- Always mount the installation plate horizontally by aligning the marking-off line with the thread and using a level gauge.

2 Drill the piping plate hole with ø2 3/4" (ø70 mm) hole-core drill.
- Line according to the left and right side of the installation plate. The meeting point of the extended line is the center of the hole. Another method is by putting measuring tape at position as shown in the diagram above. The hole center is obtained by measuring the distance namely 5 1/16" (128 mm) for left and right hole respectively.
- Drill the piping hole at either the right or the left and the hole should be slightly slanting to the outdoor side.

12.2.2 To Drill a Hole in the Wall and Install a Sleeve of Piping

1 Insert the piping sleeve to the hole.
2 Fix the bushing to the sleeve.
3 Cut the sleeve until it extrudes about 19/32" (15 mm) from the wall.

> ⚠ CAUTION
>
> ❗ When the wall is hollow, please be sure to use the sleeve for tube assembly to prevent dangers caused by mice biting the connection cable.

4 Finish by sealing the sleeve with putty or caulking compound at the final stage.

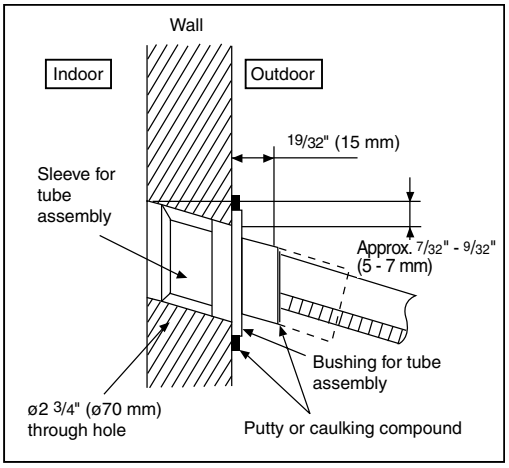

12.2.3 Indoor Unit Installation

Do not turn over the unit without it's shock absorber during pull out the piping.
It may cause intake grille damage.
Use shock absorber during pull out the piping to protect the intake grille from damage.

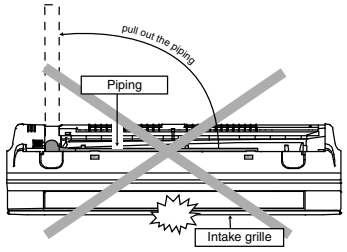

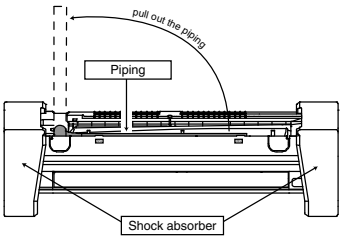

12.2.3.1 For the right rear piping

Step-1	Pull out the Indoor piping
Step-2	Install the Indoor Unit
Step-3	Secure the Indoor Unit
Step-4	Insert the connection cable

12.2.3.2 For the right bottom piping

Step-1	Pull out the Indoor piping
Step-2	Install the Indoor Unit
Step-3	Insert the connection cable
Step-4	Secure the Indoor Unit

12.2.3.3 For the embedded piping

Step-1	Replace the drain hose
Step-2	Bend the embedded piping
	• Use a spring bender or equivalent to bend the piping so that the piping is not crushed.
Step-3	Pull the connection cable into Indoor Unit
	• The inside and outside connection cable can be connected without removing the front grille.
Step-4	Cut and flare the embedded piping
	• When determining the dimensions of the piping, slide the unit all the way to the left on the installation plate. • Refer to the section "Cutting and flaring the piping".
Step-5	Install the Indoor Unit
Step-6	Connect the piping
	• Please refer to "Connecting the piping" column in outdoor unit section. (Below steps are done after connecting the outdoor piping and gas-leakage confirmation.)
Step-7	Insulate and finish the piping
	• Please refer to "Piping and finishing" column of outdoor section and "Insulation of piping connection" column as mentioned in indoor/outdoor unit installation.
Step-8	Secure the Indoor Unit

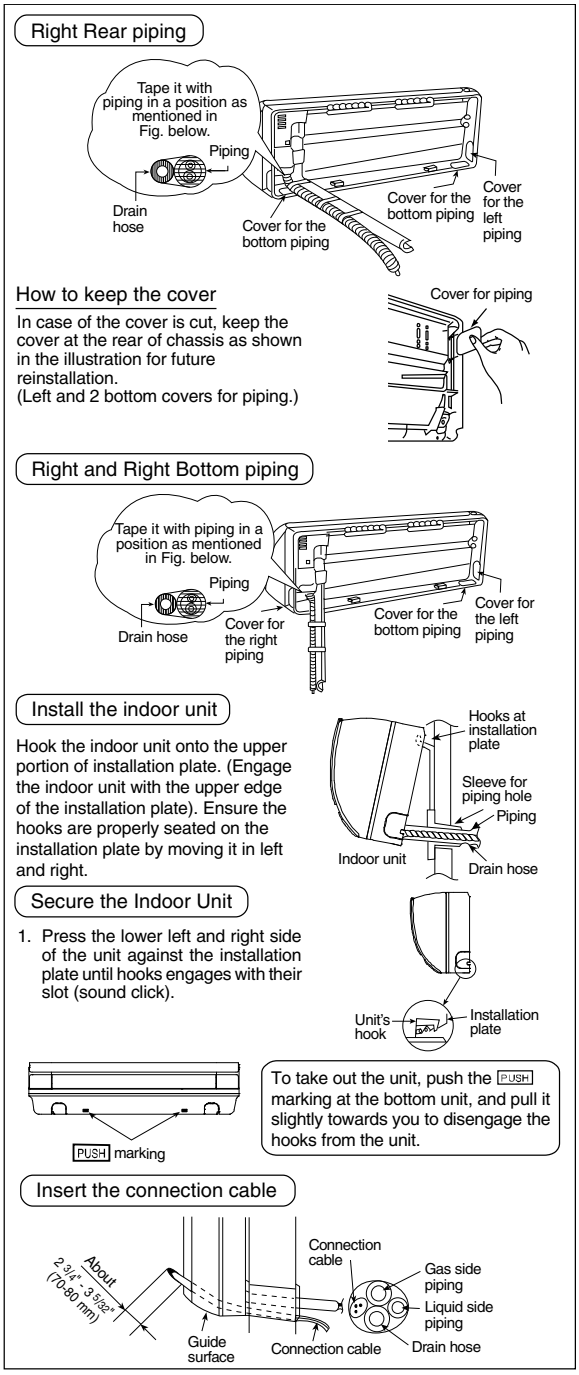

(This can be used for left rear piping and bottom piping also.)

Replace the drain hose

Rear view for left piping installation

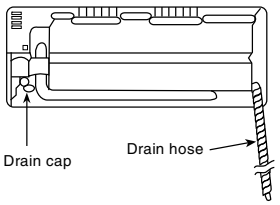

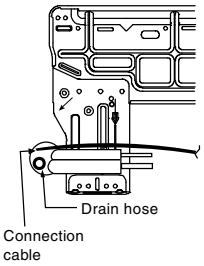

Adjust the piping slightly downwards.

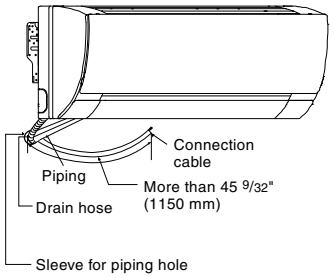

- How to pull the piping and drain hose out, in case of embedded piping.

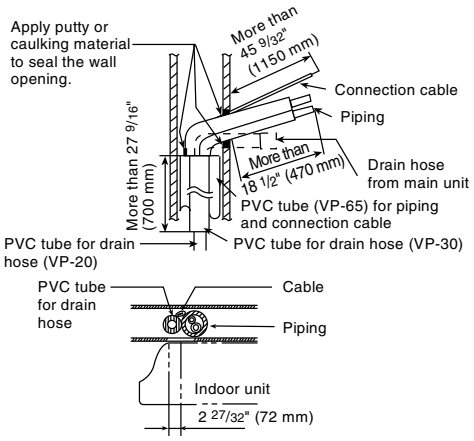

- How to insert the connection cable and drain hose in the case of left piping.

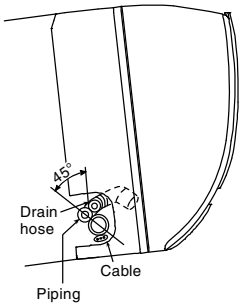

(For right piping, follow the same procedure)

Drain hose adapter 9 usage

- Join indoor drain hose to 3/4" (20 mm) nominal PVC pipe size by using drain hose adapter 9 when necessary.

Remarks :
Make sure indoor unit drain hose & 3/4" (20 mm) nominal PVC pipe are fully inserted to drain hose adapter 9.

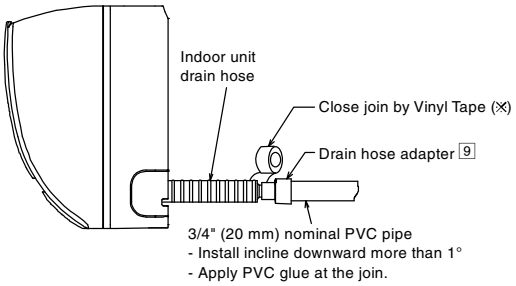

12.2.4 Connect the Cable to the Indoor Unit

1. The inside and outside connection cable can be connected without removing the front grille.
2. Unscrew the conduit cover and fix the conduit connector to conduit cover with lock nut, then secure it against chassis.
3. Connecting wire between indoor unit and outdoor unit should be UL listed or CSA approved 4 conductor wires minimum AWG16 in accordance with local electric codes.
   - Ensure the colour of wires of outdoor unit and terminal number are the same as the indoor's repectively.

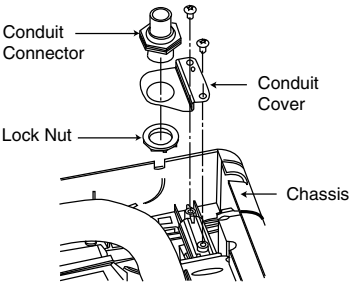

Rear Side of Indoor Unit

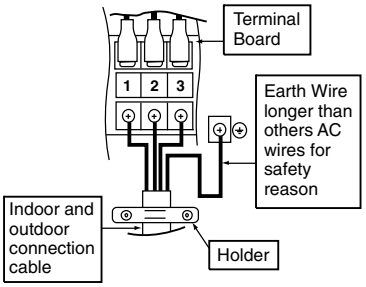

Terminals on the indoor unit	1	2	3	⏚
Colour of wires (Connecting wire)				
Terminals on the outdoor unit	1	2	3	⏚

⚠ WARNING

⏚ This equipment must be properly earthed.

- Earth lead wire shall be Yellow/Green (Y/G) in colour and shall be longer than other lead wires as shown in the figure for electrical safety in case of the slipping.

12.2.5 Wiring Stripping and connecting requirement

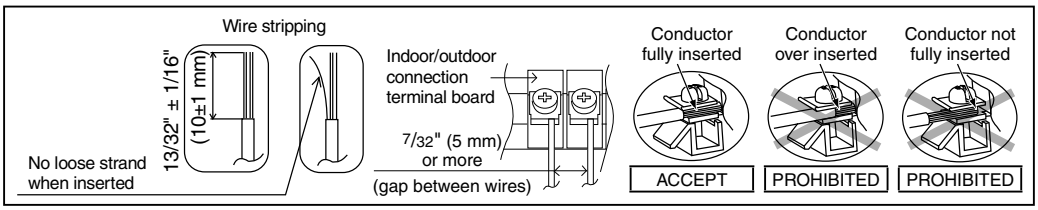

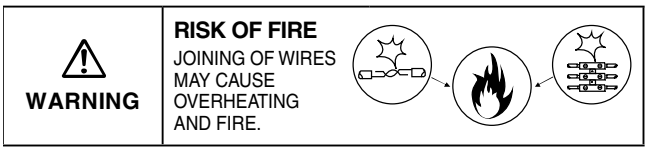

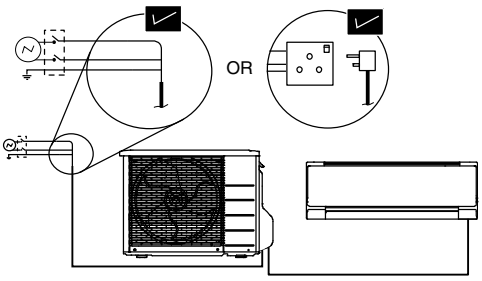

Do not joint wires

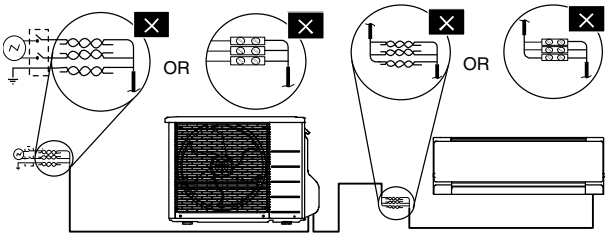

- Use complete wire without joining.
- Use approved socket and plug with earth pin.
- Wire connection in this area must follow to national wiring rules.

12.2.5.1 Cutting and flaring the piping

1 Please cut using pipe cutter and then remove the burrs.
2 Remove the burrs by using reamer. If burrs are not removed, gas leakage may be caused. Turn the piping end down to avoid the metal powder entering the pipe.
3 Please make flare after inserting the flare nut onto the copper pipes.

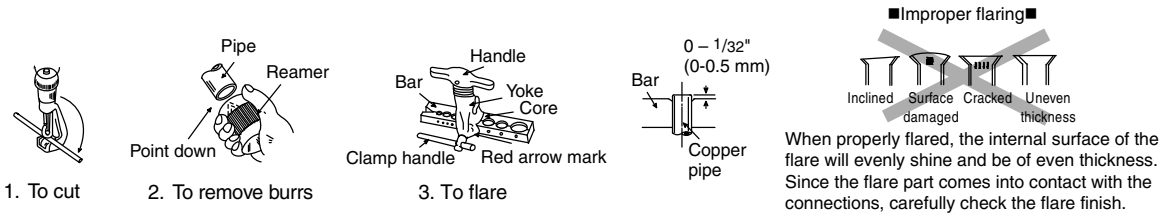

1. To cut
2. To remove burrs
3. To flare

When properly flared, the internal surface of the flare will evenly shine and be of even thickness. Since the flare part comes into contact with the connections, carefully check the flare finish.

12.3 Outdoor Unit

12.3.1 Install the Outdoor Unit

- After selecting the best location, start installation according to indoor/outdoor unit installation diagram.
  1 Fix the unit on concrete or rigid frame firmly and horizontally by bolt nut ø13/32" (ø10 mm).
  2 When installing at roof, please consider strong wind and earthquake.
  Please fasten the installation stand firmly with bolt or nails.

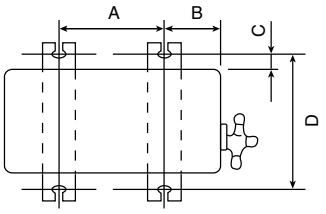

Model	A	B	C	D
E18RKUA, E24RKUA	24-1/8" (613 mm)	5 5/32" (131 mm)	5/8" (16 mm)	14 3/16" (360.5 mm)

12.3.2 Connect the Piping

12.3.2.1 Connecting the piping to indoor

Please make flare after inserting flare nut (locate at joint portion, of tube assembly) onto the copper pipe. (In case of using long piping)

Connect the piping
- Align the center of piping and sufficiently tighten the flare nut with fingers.
- Further tighten the flare nut with torque wrench in specified torque as stated in the table.

Do not over tighten, over tightening may cause gas leakage.	
Piping size	Torque
1/4" (6.35 mm)	13.3 lbf.ft [18 N•m (1.8 kgf•m)]
3/8” (9.52 mm)	31.0 lbf.ft [42 N•m (4.3 kgf•m)]
1/2" (12.7 mm)	40.6 lbf.ft [55 N•m (5.6 kgf•m)]
5/8” (15.88 mm)	47.9 lbf.ft [65 N•m (6.6 kgf•m)]
3/4" (19.05 mm)	73.8 lbf.ft [100 N•m (10.2 kgf•m)]

12.3.2.2 Connecting the piping to outdoor

Decide piping length and then cut by using pipe cutter.
Remove burrs from cut edge.
Make flare after inserting the flare nut (locate at valve) onto the copper pipe.
Align center of piping to valves and then tighten with torque wrench to the specified torque as stated in the table.

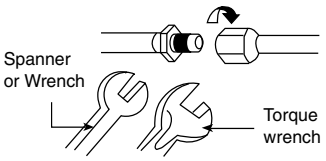

12.3.2.3 Connecting the piping to outdoor multi

Decide piping length and then cut by using pipe cutter. Remove burrs from cut edge.
Make flare after inserting the flare nut (locate at valve) onto the copper pipe.
Align center of piping to valve and then tighten with torque wrench to the specified torque as stated in the table.

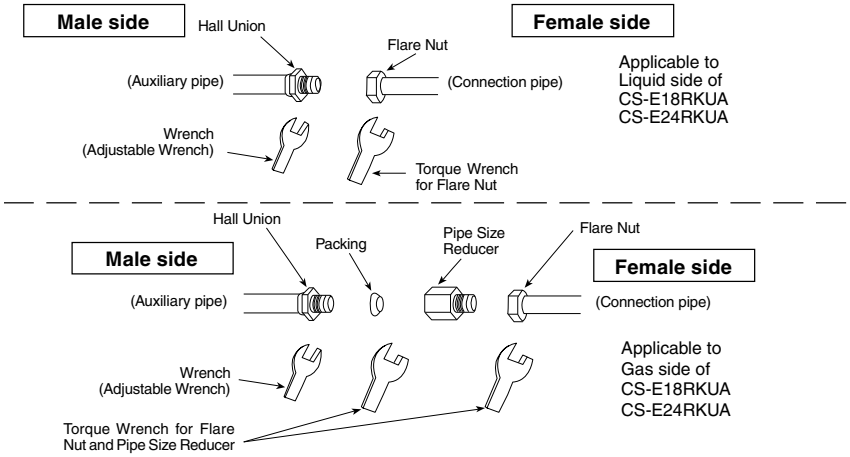

12.3.2.4 Gas Leak Checking

Pressure test to system to 400 PSIG with dry nitrogen, in stages. Thoroughly leak check the system.
If the pressure holds, release the nitrogen and proceed to section 12.3.3.

12.3.3 Evacuation of the equipment

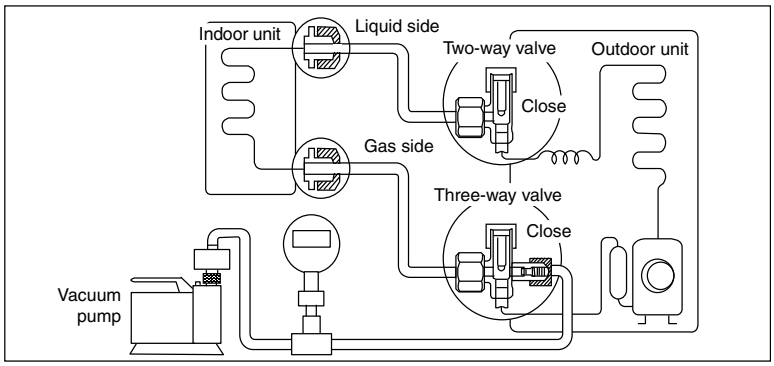

1. Connect a charging hose with a push pin to the Low side of a charging set and the service port of the 3-way valve.
2. Connect the micron gauge between vacuum pump and service port of outdoor units.
3. Turn on the power switch of the vacuum pump and make sure that connect digital micron gauge and to pull down to a value of 500 microns.
4. To make sure micron gauge a value 500 microns and close the low side valve of the charging set and turn off the vacuum pump.
5. Disconnect the vacuum pump house from the service port of the 3-way valve.
6. Tighten the service port caps of the 3-way valve at a torque of 13.3 lbf•ft (18 N•m) with a torque wrench.
7. Remove the valve caps of both of the 2-way valve and 3-way valve. Position both of the valves to “Open” using a hexagonal wrench (5/32" (4 mm)).
8. Mount valve caps onto the 2-way valve and the 3-way valve.
   - Be sure to check for gas leakage.

- If micron gauge value does not descend 500 microns, take the following measures:
- If the leak stops when the piping connections are tightened further, continue working from step ③.
- If the leak does not stop when the connections are retightened, repair location of leak.
- Do not release refrigerant during piping work for installation and reinstallation.
- Be careful with the liquid refrigerant, it may cause frostbite.

12.3.3.1 Connect the Cable to the Outdoor Unit

1. Remove control board cover (Resin and Metal).
2. Remove particular plate.
3. Remove plugs.
4. Fix the conduit connectors to the knockout holes with lock-nuts, then secure them against the side panel.
5. All wires pass through conduits & particular plate's opening hole.
6. Connecting wire between indoor unit and outdoor unit should be UL listed or CSA approved 4 conductor wires minimum AWG16 in accordance with local electric codes.
7. Wire connection to the power supply (208/230V 60Hz) through circuit breaker.
   - Connect the UL listed or CSA approved wires minimum AWG12 to the terminal board, and connect the other end of the wires to ELCB / GFCI.
8. Connect the power supply cord and connecting wire between indoor unit and outdoor unit according to the diagram below.

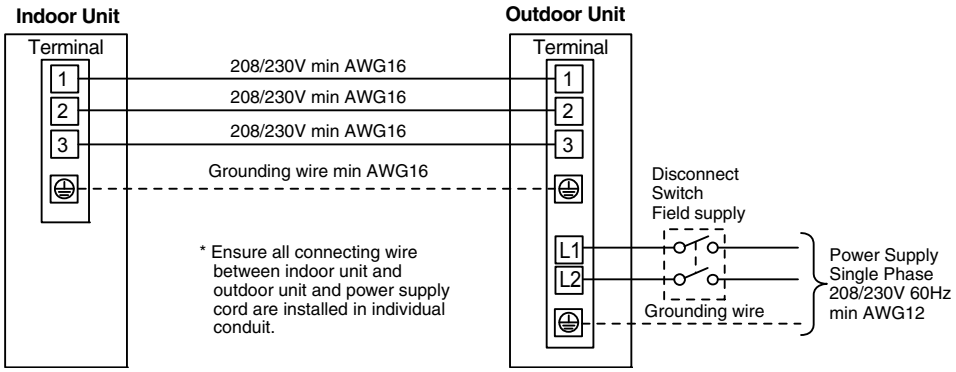

9. Secure the wire onto the control board with the holder (clamper).
10. After completing wiring connections, reattach the control board cover (Metal and Resin) and the top panel to the original position with the screws.
11. For wire stripping and connection requirement, refer to instruction 12.2.5 of indoor unit.

⚠ WARNING
This equipment must be properly earthed.

- Earth lead wire shall be Yellow/Green (Y/G) in colour and longer than other lead wires for electrical safety in case of the slipping.

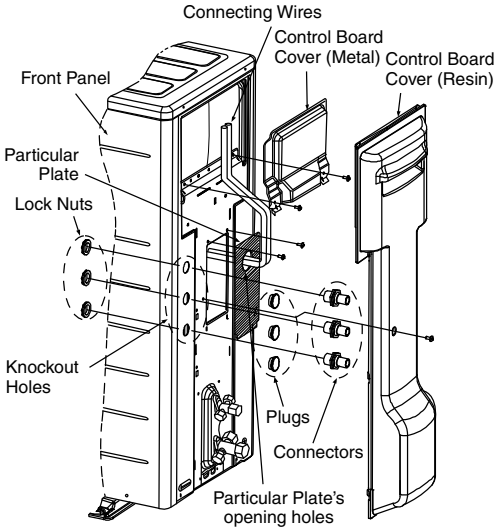

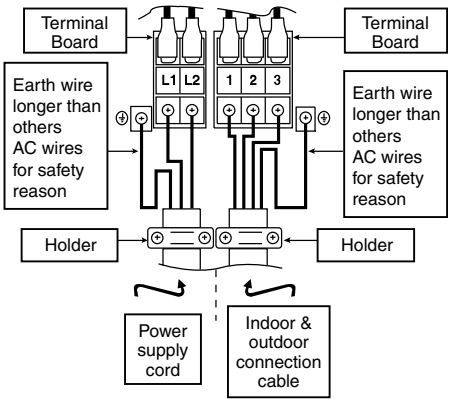

12.3.3.2 Piping Insulation

1. Please carry out insulation at pipe connection portion as mentioned in Indoor/Outdoor Unit Installation Diagram. Please wrap the insulated piping end to prevent water from going inside the piping.
2. If drain hose or connecting piping is in the room (where dew may form), please increase the insulation by using POLY-E FOAM with thickness 1/4" (6 mm) or above.

13. Operation Control

13.1 Basic Function

Inverter control, which equipped with a microcomputer in determining the most suitable operation mode as time passes, automatically adjusts output power for maximum comfort always. In order to achieve the suitable operation mode, the microcomputer maintains the set temperature by measuring the temperature of the environment and performing temperature shifting. The compressor at outdoor unit is operating following the frequency instructed by the microcomputer at indoor unit that judging the condition according to internal setting temperature and intake air temperature.

13.1.1 Internal Setting Temperature

Once the operation starts, remote control setting temperature will be taken as base value for temperature shifting processes. These shifting processes are depending on the air conditioner settings and the operation environment. The final shifted value will be used as internal setting temperature and it is updated continuously whenever the electrical power is supplied to the unit.

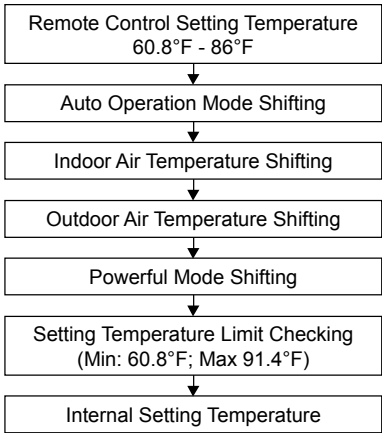

13.1.2 Cooling Operation

13.1.2.1 Thermostat control

- Compressor is OFF when intake Air Temperature - Internal Setting Temperature < 2.7°F.
- Compressor is ON after waiting for 3 minutes, if the Intake Temperature - Internal Setting Temperature > Compressor OFF point.

13.1.3 Soft Dry Operation

13.1.3.1 Thermostat control

- Compressor is OFF when Intake Temperature - Internal Setting Temperature < -3.6°F.
- Compressor is ON after waiting for 3 minutes, if the Intake Air Temperature - Internal Setting Temperature > Compressor OFF point.

13.1.4 Heating Operation

13.1.4.1 Thermostat control

- Compressor is OFF when Intake Temperature - Internal Setting Temperature > 3.6°F.
- Compressor is ON after waiting for 3 minutes, if the Intake Air Temperature - Internal Setting Temperature < Compressor OFF point

13.1.4.2 Automatic Operation (For Single Split Connection Only)

- This mode can be set using remote control and the operation is decided by remote control setting temperature, remote control operation mode and indoor intake air temperature.
- During operation mode judgment, indoor fan motor (with speed of Lo-) is running for 30 seconds to detect the indoor intake air temperature.
- Every 10 minutes, the indoor temperature is judged.
- For the 1st judgment
  - If indoor intake temperature - remote control setting temperature ≥ 3.6°F, COOL mode is decided.
  - If -3.6°F ≤ indoor intake temperature - remote control setting temperature < 3.6°F, DRY mode is decided.
  - If indoor intake temperature - remote control setting temperature < -3.6°F , HEAT mode is decided.

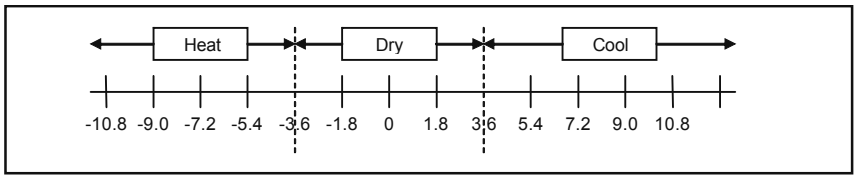

- For the 2nd judgment onwards
  - If indoor intake temperature - remote control setting temperature ≥ 5.4°F, if previous operate in DRY mode, then continue in DRY mode. otherwise COOL mode is decided.
  - If -3.6°F ≤ indoor intake temperature - remote control setting temperature < 5.4°F, maintain with previous mode.
  - If indoor intake temperature - remote control setting temperature < -3.6°F, HEAT mode is decided.

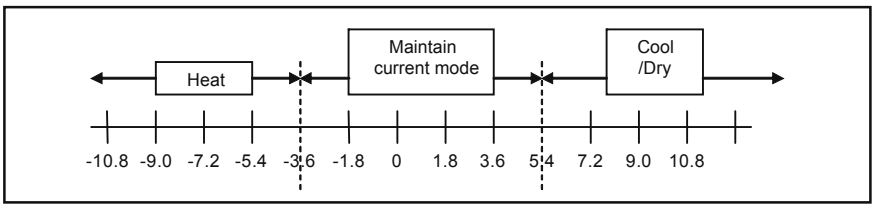

13.2 Indoor Fan Speed Control

- Indoor Fan Speed can be set using remote control.

13.2.1 Fan Speed Rotation Chart

			E9RKUAW	E12RKUAW	E18RKUAW	E24RKUAW
Mode	**Fan Tap**	**Application**	**rpm**	**rpm**	**rpm**	**rpm**
COOL	SHi	Pwr Me+	1210	1350	1480	1500
	Hi	Fc, RC	1120	1230	1380	1400
	Me+	RC	1010	1110	1300	1320
	Me	RC	910	1000	1220	1240
	Me-	RC	810	890	1140	1160
	Lo	Fcmin, RC	710	780	1060	1090
	Lo-	QuietLo	610	620	970	1000
	SLo	Dry	550	560	690	690
	SSLo	Auto Cut	540	550	580	580

			E9RKUAW	E12RKUAW	E18RKUAW	E24RKUAW
Mode	**Fan Tap**	**Application**	**rpm**	**rpm**	**rpm**	**rpm**
HEAT	SSHi	Pwr Me+	1340	1450	1500	1600
	SHi	Fh, RC	1250	1380	1410	1500
	Me+	RC	1140	1290	1330	1430
	Me	RC	1040	1210	1260	1360
	Me-	RC	930	1120	1190	1290
	Lo	Fhmin, RC	830	1040	1120	1220
	Lo-	QuietLo	730	940	1030	1110
	SLo	Thermo Off, Hot start	570	570	430	430
	SSLo	Thermo Off	560	560	330	330

13.3 Indoor Fan Motor Operation

13.3.1 Basic Rotation Speed (rpm)

- Manual Fan Speed
  [Cooling, Dry]
  - Fan motor's number of rotation is determined according to remote control setting.

Remote control	○	○	○	○	○
Tab	Hi	Me+	Me	Me-	Lo

  [Heating]
  - Fan motor's number of rotation is determined according to remote control setting.

Remote control	○	○	○	○	○
Tab	Shi	Me+	Me	Me-	Lo

- Auto Fan Speed
  [Cooling, Dry]
  - According to room temperature and setting temperature, indoor fan speed is determined automatically.
  - The indoor fan will operate according to pattern below.

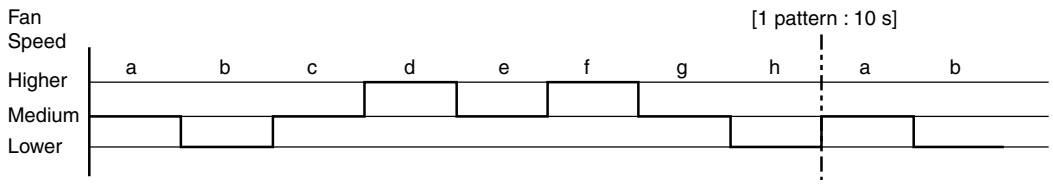

  - During operation, indoor fan motor may stop due to odor prevention.

  [Heating]
  - According to indoor pipe temperature, automatic heating fan speed is determined as follows.

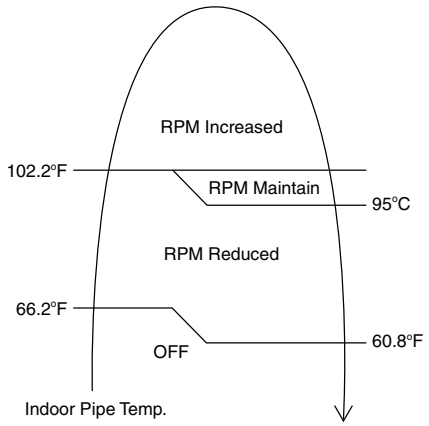

- Feedback control
  - Immediately after the fan motor started, feedback control is performed once every second.
  - During fan motor on, if fan motor feedback ≥ 2550 rpm or < 50 rpm continue for 10 seconds, then fan motor error counter increase, fan motor is then stop and restart. If the fan motor counter becomes 7 times, then H19 - fan motor error is detected. Operation stops and cannot on back.

13.4 Outdoor Fan Motor Operation

Outdoor fan motor is operated with fan speed number of rotation. It starts when compressor starts operation and it stops 30 seconds after compressor stops operation.

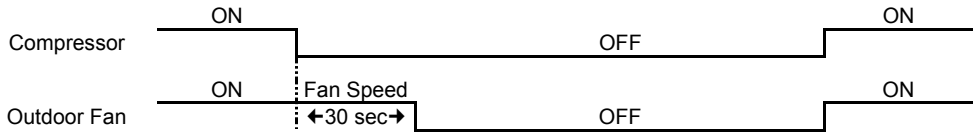

13.5 Airflow Direction

- There are two types of airflow, vertical airflow (directed by horizontal vane) and horizontal airflow (directed by vertical vanes).
- Control of airflow direction can be automatic (angles of direction is determined by operation mode, heat exchanger temperature and intake air temperature) and manual (angles of direction can be adjusted using remote control).

13.5.1 Vertical Airflow

13.5.1.1 CU-E9RKUA CU-E12RKUA

Operation Mode	Airflow Direction		Vane angle (°)				
			1	2	3	4	5
Heating	Auto with Heat Exchanger Temperature	A	20				
		B	57				
		C	32				
	Manual		20	32	45	57	68
Cooling	Auto		20 ~ 45				
	Manual		20	26	32	37	45
Soft Dry	Auto		20 ~ 45				
	Manual		20	26	32	37	45

13.5.1.2 CU-E18RKUA CU-E24RKUA

Operation Mode	Airflow Direction		Vane angle (°)				
			1	2	3	4	5
Heating	Auto with Heat Exchanger Temperature	A	20				
		B	45				
		C	32				
	Manual		20	32	45	57	68
Cooling	Auto		20 ~ 45				
	Manual		20	26	32	37	45
Soft Dry	Auto (Anti-Dew Control)		20 ~ 45				
	Manual (Anti-Dew Control)		20	26	32	37	45

- Automatic vertical airflow direction can be set using remote control; the vane swings up and down within the angles as stated above. For heating mode operation, the angle of the vane depends on the indoor heat exchanger temperature as Figure 1 below. When the air conditioner is stopped using remote control, the vane will shift to close position.
- Manual vertical airflow direction can be set using remote control; the angles of the vane are as stated above and the positions of the vane are as Figure 2 below. When the air conditioner is stopped using remote control, the vane will shift to close position.

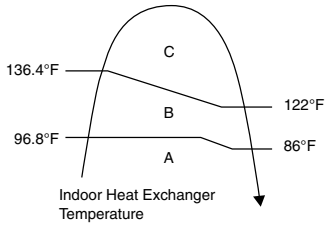

Figure 1

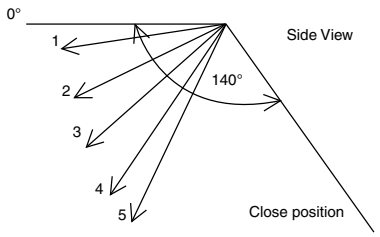

Figure 2

13.5.2 Horizontal Airflow (CU-E9RKUA CU-E12RKUA)

The horizontal airflow direction louvers can be adjusted manually by hand.

13.5.3 Horizontal Airflow (CU-E18RKUA CU-E24RKUA)

- Automatic horizontal airflow direction can be set using remote control; the vane swings left and right within the angles as stated below. For heating mode operation, the angle of the vane depends on the indoor heat exchanger temperature as Figure 1 below.

Operation Mode		Vane Angle (°)
Heating with heat exchanger temperature	A	68 ~ 112
	B	90
Cooling and Soft Sry		68 ~ 112

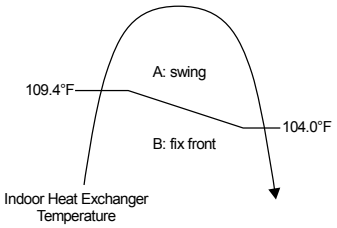

Figure 1

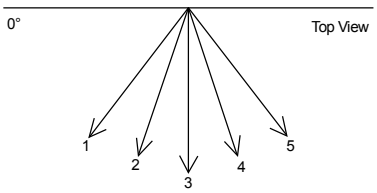

Figure 2

- Manual vertical airflow direction can be set using remote control; the angles of the vane are as stated below and the positions of the vane are as figure below:

Pattern	1	2	3	4	5
Airflow Direction Patterns at Remote Control					
Vane Angle (°)	90	68	78	102	112

13.6 Quiet Operation (Cooling Mode/Cooling Area of Dry Mode)

- Purpose
  - To provide quiet cooling operation compare to normal operation.

- Control condition
  - Quiet operation start condition
    - When “Quiet” button at remote control is pressed.
      Quiet LED illuminates.
  - Quiet operation stop condition
    - When one of the following conditions is satisfied, quiet operation stops:
      - POWERFUL/QUIET button is pressed.
      - Stop by OFF/ON button.
      - OFF Timer activates.
      - POWERFUL/QUIET button is pressed again.
    - When quiet operation is stopped, operation is shifted to normal operation with previous setting.
    - When fan speed is changed, quiet operation is shifted to quiet operation of the new fan speed.
    - When operation mode is changed, quiet operation is shifted to quiet operation of the new mode.
    - During quiet operation, if ON timer activates, quiet operation maintains.
    - After off, when on back, quiet operation is not memorised.

- Control contents
  - Auto fan speed is change from normal setting to quiet setting of respective fan speed. This is to reduce sound of Hi, Me, Lo for 3dB.
  - Manual fan speed for quiet operation is -1 step from setting fan speed.

13.7 Quiet Operation (Heating)

- Purpose
  - To provide quiet heating operation compare to normal operation.

- Control condition
  - Quiet operation start condition
    - When “POWERFUL/QUIET” button at remote control is pressed.
      Quiet LED illuminates.
  - Quiet operation stop condition
    - When one of the following conditions is satisfied, quiet operation stops:
      - Stop by OFF/ON button.
      - Timer “off” activates.
      - POWERFUL/QUIET button is pressed again.
    - When quiet operation is stopped, operation is shifted to normal operation with previous setting.
    - When fan speed is changed, quiet operation is shifted to quiet operation of the new fan speed.
    - When operation mode is changed, quiet operation is shifted to quiet operation of the new mode.
    - During quiet operation, if timer “on” activates, quiet operation maintains.
    - After off, when on back, quiet operation is not memorised.

- Control contents
  - Fan speed auto
    - Indoor FM RPM depends on pipe temperature sensor of indoor heat exchanger. Auto fan speed is changed from normal setting to quiet setting of respective fan speed. This is to reduce sound of Hi, Me, Lo for 3dB.
  - Fan speed manual
    - Manual fan speed for quiet operation is -1 step from setting fan speed.

13.8 Powerful Mode Operation

- When the powerful mode is selected, the internal setting temperature will shift lower up to 3.6°F (for Cooling/Soft Dry) or higher up to 6.3°F (for Heating) than remote control setting temperature for 20 minutes to achieve the setting temperature quickly.

13.9 Timer Control

13.9.1 ON Timer Control

- ON Timer can be set using remote control, where the unit with timer set will start operation earlier than the setting time. This is to provide a comfortable environment when reaching the set ON time.
- 60 minutes before the set ON time, indoor (at fan speed of Lo-) and outdoor fan motor start operation for 30 seconds to determine the indoor intake air temperature and outdoor air temperature in order to judge the operation starting time.
- From the above judgment, the decided operation will start operation earlier than the set time as shown below.

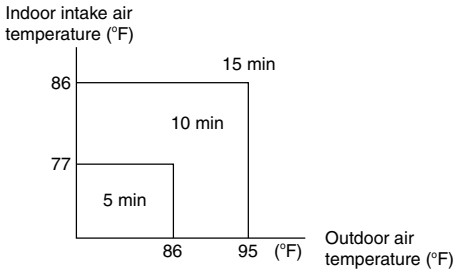

Cooling/Soft Dry

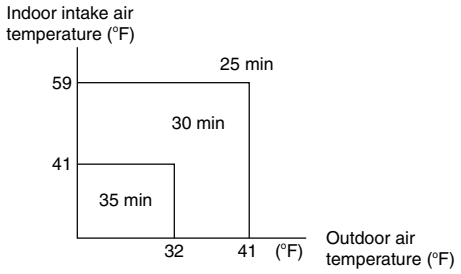

Heating

13.9.2 OFF Timer Control

- OFF Timer can be set using remote control, the unit with timer set will stop at set time.

13.10 Auto Restart Control

- When the power supply is cut off during the operation of air conditioner, the compressor will re-operate within three to four minutes (there are 10 patterns between 2 minutes 58 seconds and 3 minutes 52 seconds to be selected randomly) after power supply resumes.
- This type of control is not applicable during ON/OFF Timer setting.

13.11 Indication Panel

LED	POWER	TIMER	QUIET	POWERFUL	AUTO COMFORT	ECONAVI
Color	Green	Orange	Orange	Orange	Green	Green
Light ON	Operation ON	Timer Setting ON	Quiet Mode ON	Powerful Mode ON	Auto Comfort ON	Econavi Mode ON
Light OFF	Operation OFF	Timer Setting OFF	Quiet Mode OFF	Powerful Mode OFF	Auto Comfort OFF	Econavi Mode OFF

Note:
- If POWER LED is blinking, the possible operation of the unit are Hot Start, during Deice operation, operation mode judgment, or ON timer sampling.
- If Timer LED is blinking, there is an abnormality operation occurs.

13.12 ECONAVI and AUTO COMFORT Operation

- A Pyoelectric infrared sensor is used to detect injection strength variation of infrared at setting area to determine the presence or absence of human and its activity level. Human detection area is shown in figure below:

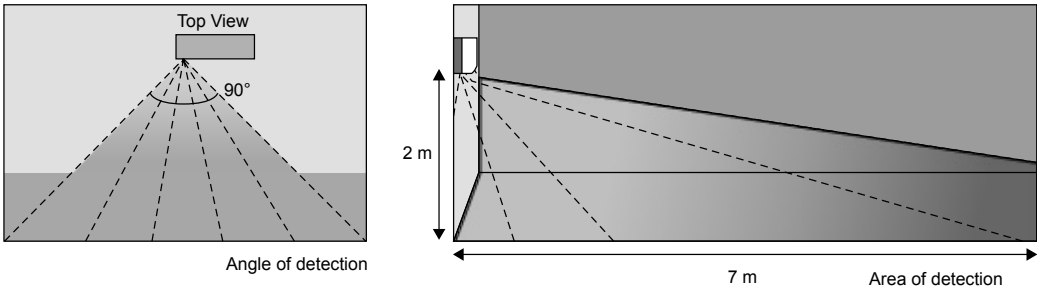

- ECONAVI and AUTO COMFORT operation – Human presence/absence detection outlined flow

  Process infrared sensor output signal

  Human detection (movement) every 3 seconds.

  ▼

  Human detection records

  Records human detection (movement) result for 30 seconds and determine its activity level i.e. Hi/Lo.

  ▼

  Presence / absence detection

  Compares current and previous human detection result every 30 seconds to determine the presence or absence of human.

  ▼

  Presence / absence determination

  Based on human presence / absence detection, if human presence detection showed within 30 minutes, it is recognised that human is present. If human absence detection showed continuously for more than 30 minutes, it is recognised that no human is present.

- ECONAVI and AUTO COMFORT Sensor abnormality detection
  1. Connector pulled out (disconnected), Wire cut Abnormality (Fix Output at Hi)
     a. Abnormal judgment start condition.
        Start from ECONAVI and AUTO COMFORT Sensor power ON, and end after 30 seconds.
     b. Control content.
        Judge ECONAVI and AUTO COMFORT Sensor power level every 100ms.
     c. Abnormal Judgment condition.
        When ECONAVI and AUTO COMFORT Sensor has continues for 25 seconds Hi level.

2. Circuit Abnormal (Fix Output Lo)
   a. Abnormal judgment start condition.
      After ECONAVI and AUTO COMFORT Sensor unit power ON, and after pressed 70 seconds.
   b. Control content.
      Judge ECONAVI and AUTO COMFORT Sensor power level every 100ms.
   c. Abnormal Judgment condition.
      When ECONAVI and AUTO COMFORT Sensor has continues at Lo level for 25 seconds.

3. Abnormal treatment
   Any one of the above self-diagnosis result is abnormal
   - Abnormal counter +1 and ECONAVI and AUTO COMFORT Sensor power supply OFF.
   - After ECONAVI and AUTO COMFORT Sensor unit power is OFF for 5 seconds, Retry the ECONAVI and AUTO COMFORT operation.
   - When Abnormal counter reach 4 counts, ECONAVI and AUTO COMFORT sensor abnormality is confirmed.
     (Abnormal counter is cleared when sensor power ON and maintain normal for 120 seconds and above or Clear Abnormal counter by power reset)
   - Save ECONAVI and AUTO COMFORT Sensor Abnormality H59 (no Timer LED blinking).
   - ECONAVI & AUTO COMFORT Sensor operation OFF, but ECONAVI and AUTO COMFORT LED maintain ON.
   - The unit still operate as normal.
   - Sensor error counter can be cleared only after power supply reset or AC Reset button on the remote control is pressed.

- ECONAVI and AUTO COMFORT Demo Mode
  - To enable ECO DEMO mode, during unit is OFF (power standby):

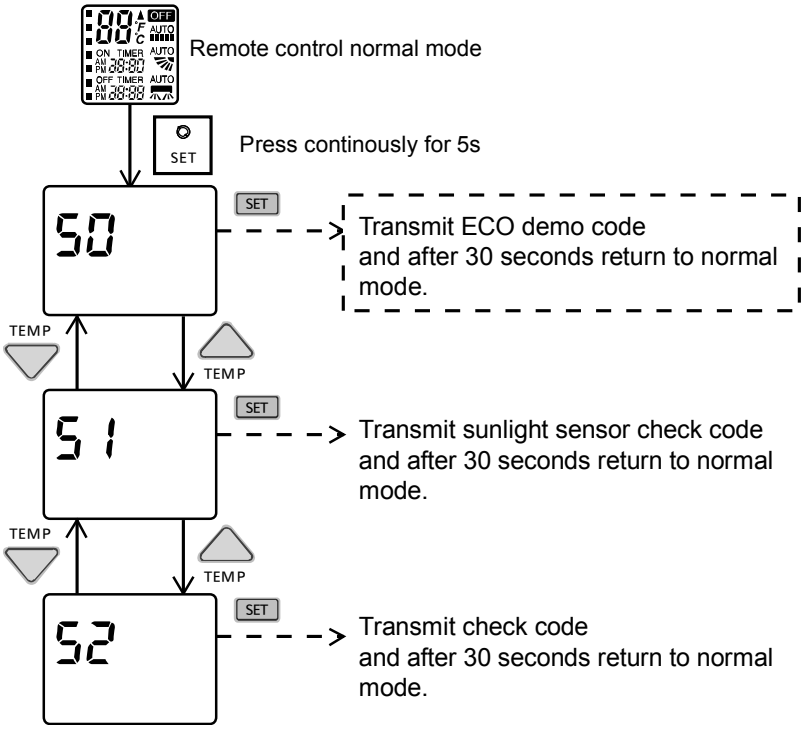

  - To disable ECO Demo MODE:
    - Transmit ECO Demo signal again.

Control details:
- During ECONAVI and AUTO COMFORT Demo mode, operation LED ON and horizontal vane will set to Auto Swing.
- When Hi activity judge, Fan speed change to Hi Fan and ECONAVI and AUTO COMFORT LED ON.
- When Lo activity judge, Fan speed change to Lo Fan and ECONAVI and AUTO COMFORT LED OFF.
- No setting temperature adjustment.

- During ECONAVI and AUTO COMFORT operation, the internal setting temperature and fan speed are adjusted in order to provide comfort and energy saving.

- ECONAVI Start condition.
  - Press ECONAVI button.

- ECONAVI Stop condition.
  - Press ECONAVI button again.
  - OFF Timer activates.
  - Press OFF/ON button to turn off the air conditioner.
  - Press AUTO OFF/ON button to turn off the air conditioner.
  - Press POWERFUL/QUIET button.

- AUTO COMFORT Start condition.
  - Press AUTO COMFORT button.

- AUTO COMFORT Stop condition.
  - Press AUTO COMFORT button again.
  - OFF Timer activates.
  - Press OFF/ON button to turn off the air conditioner.
  - Press AUTO OFF/ON button to turn off the air conditioner.
  - Press POWERFUL/QUIET button.

- ECONAVI and AUTO COMFORT operation could ON when any of the following conditions is fulfilled:
  - During forced cooling or forced heating operation.

- Power Failure
  - ECONAVI and AUTO COMFORT operation will be resuming after recovered from power failure.

- Timer Operation
  - When unit is turn on by ON Timer and ECONAVI and AUTO COMFORT operation is ON during previous operation before OFF, ECONAVI and AUTO COMFORT operation will not be ON automatically.
  - When unit is turn on by ON Timer and ECONAVI and AUTO COMFORT operation is OFF during previous operation before OFF, ECONAVI and AUTO COMFORT operation will not be ON automatically.

- Other Information
  - ECONAVI and AUTO COMFORT, Powerful, Quiet and Mild Dry Cooling cannot be operated at the same time.
  - ECONAVI and AUTO COMFORT sensor initialized time is 70 seconds from power supplied to ECONAVI and AUTO COMFORT sensor, or 70 seconds from the operation start.

- Setting Temperature and Fan Speed Shift
  - Mono Sensor

ECONAVI ; Detecting human presence and activity, the unit controls room temperature to save energy.

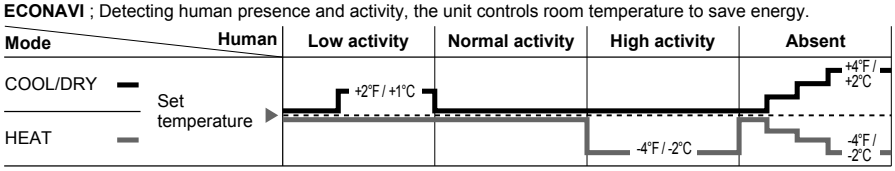

AUTO COMFORT ; Detecting human presence and activity, the unit controls room temperature to keep human comfortable consistently.

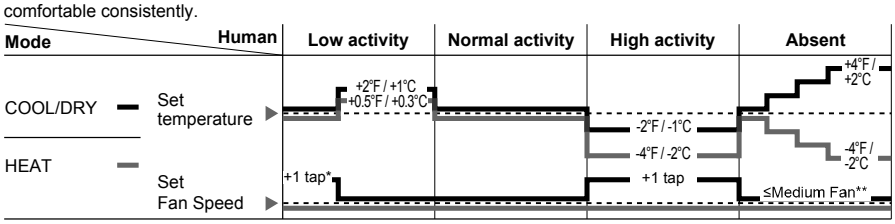

* During low activity, fan speed 1 tap up for first 15 minutes or until set temperature is reached.
** During human absence, maximum fan speed for COOL/DRY mode is medium fan.

13.12.1 Human Activity Sensor Check Mode

- To enable Human Activity sensor abnormality check mode, during ECONAVI operation ON:

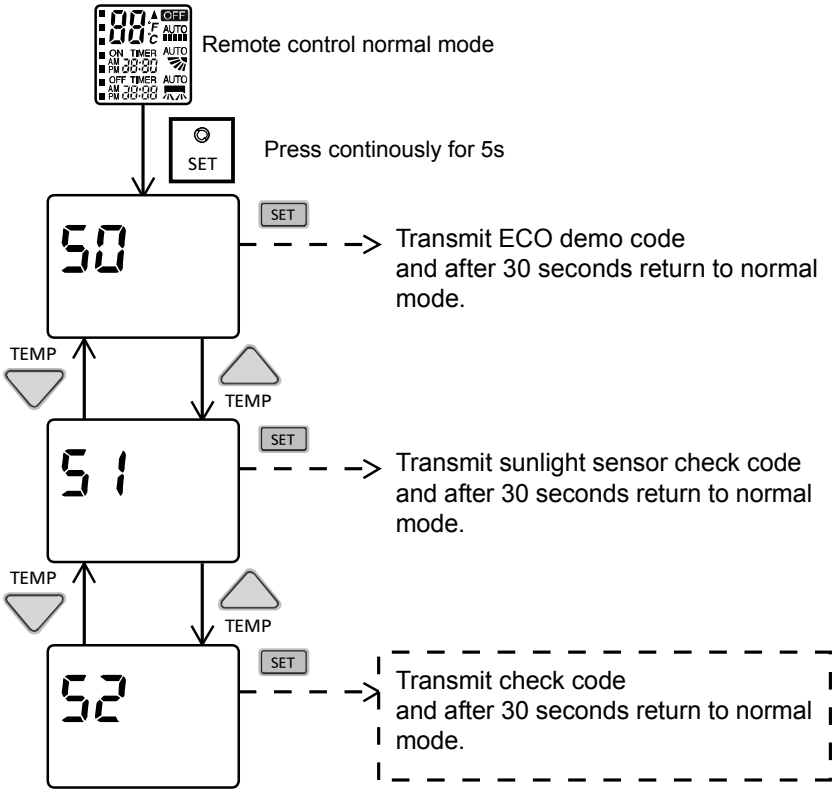

- During ECONAVI is ON, when CHECK signal received, if either sensors has abnormality, the 4 times abnormality counter is ignored, ECONAVI Indicator will blink immediately and error code is memorized.
- The unit could operate without ECONAVI or AUTO COMFORT.
- The ECONAVI indicator blinking could be cancelled by pressing ECONAVI button again.
- If the human activity sensor has no abnormality, the CHECK process will end and continue with normal operation.

14. Operation Control (For Multi Split Connection)

During multi split connection, indoor unit's operation controls are same with single split connection unless specified in this chapter.

14.1 Cooling operation

14.1.1 Thermostat control

- Capability supply to indoor unit is OFF (Expansion valve closed) when Intake Air Temperature — Internal setting temperature < 28.4°F.
- Capability resume supply to indoor unit after waiting for 3 minutes, if the Intake Air temperature — Internal setting temperature > Capability supply OFF point.

14.2 Soft Dry Operation

14.2.1 Thermostat control

- Capability supply to indoor unit is OFF (Expansion valve closed) when Intake Air Temperature — Internal setting temperature < 26.6°F.
- Capability resume to indoor unit after waiting for 3 minutes, if the Intake Air temperature — Internal setting temperature > Capability supply OFF point.

14.3 Heating Operation

14.3.1 Thermostat control

- Capability supply to indoor unit is OFF (Expansion valve closed) when Intake Air Temperature — Internal setting temperature > 33.8°F.
- During this condition, the indoor fan is stopped if compressor is ON.
- Capability resume supply to indoor unit after waiting for 3 minutes, if the Intake Air Temperature — Internal setting temperature < Capability supply OFF point.

14.3.2 Temperature Sampling Control

- Temperature sampling is controlled by outdoor unit where room temperature for all power supply ON indoor unit could be obtained.
- When capability supply to the indoor unit is OFF and the compressor is ON during heating operation, the indoor fan motor is stopped. During this condition, 15 seconds after sampling signal from outdoor unit is received, the indoor fan start operation at low fan speed.
- However, within first 4 minutes of capability stopped supply to the indoor unit, even sampling signal is received, the sampling control is cancelled.

14.4 Automatic Operation (For Multi Split Connection Only)

- This mode can be set using remote control and the operation is decided by remote control setting temperature, remote control operation mode, indoor intake and outdoor air temperature.
- During operation mode judgment, indoor fan motor (with speed of -Lo) and outdoor fan motor are running for 30 seconds to detect the indoor intake and outdoor air temperature. The operation mode is decided based on below chart.

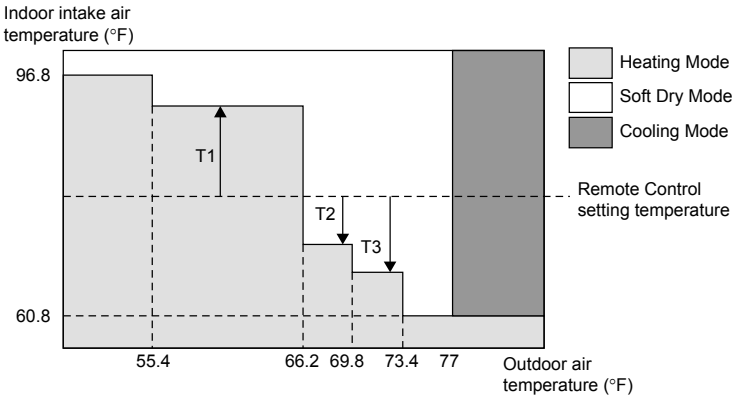

- Every 180 minutes, the indoor and outdoor temperature is judge. Based on remote control setting temperature, the value of T1 will increase up to 50°F, T2 will decrease by 37.4°F and T3 will decrease up to 46.4°F.

14.5 Indoor Fan Motor Operation

14.5.1 Residual Heat Removal Control

- To prevent high pressure at indoor unit, when heating mode thermostat-off condition or power supply OFF, indoor fan continue to operate at controlled fan speed for maximum 30 seconds then stop.

14.6 Powerful Mode Operation

- When the power mode is selected, the internal setting temperature will shift lower up to 39.2°F for Cooling/Soft Dry or higher up to 42.8°F for heating than remote control setting temperature, the powerful operation continue until user cancel the Powerful operation by pressing powerful button again.

14.7 Auto restart control

- When the power supply is cut off during the operation of air conditioner, the compressor will re-operate between three to four minutes (10 patterns to be selected randomly) after power resume.
- During multi split connection, Indoor unit will resume previous mode, include unit standby mode.

14.8 Indication Panel

LED	POWER	TIMER	QUIET	POWERFUL	AUTO COMFORT	ECONAVI
Color	Green	Orange	Orange	Orange	Green	Green
Light ON	Operation ON	Timer Setting ON	Quiet Mode ON	Powerful Mode ON	Auto Comfort ON	Econavi Mode ON
Light OFF	Operation OFF	Timer Setting OFF	Quiet Mode OFF	Powerful Mode OFF	Auto Comfort OFF	Econavi Mode OFF

Note:

- If POWER LED is blinking (0.5 second ON, 0.5 second OFF), the possible operation of the unit are during Indoor Residual Heat Removal, Hot Start, during Deice operation, operation mode judgment, or ON timer sampling.
- If POWER LED is blinking (2.5 seconds ON, 0.5 second OFF), the unit is in standby mode.
- If TIMER LED is blinking, there is an abnormality operation occurs.

15. Protection Control (E9RK and E12RK)

15.1 Protection Control For All Operations

15.1.1 Restart Control (Time Delay Safety Control)

- The compressor will not turn on within 3 minutes from the moment operation stops, although the unit is turned on again by pressing OFF/ON button at remote control within this period.
- This control is not applicable if the power supply is cut off and on again.
- This phenomenon is to balance the pressure inside the refrigerant cycle.

15.1.2 30 Seconds Forced Operation

- Once the air conditioner is turned on, the compressor will not stop within 30 seconds in a normal operation although the intake air temperature has reached the thermo-off temperature. However, force stop by pressing the OFF/ON button at the remote control is permitted or the Auto OFF/ON button at indoor unit.
- The reason for the compressor to force operation for minimum 30 seconds is to allow the refrigerant oil run in a full cycle and return back to the outdoor unit.

15.1.3 Total Running Current Control

- When the outdoor unit total running current (AC) exceeds X value, the frequency instructed for compressor operation will be decreased.
- If the running current does not exceed X value for 5 seconds, the frequency instructed will be increased.
- However, if total outdoor unit running current exceeds Y value, compressor will be stopped immediately for 3 minutes.

Model		E9RKUA	E12RKUA
Cool (X)	A	3.89 A	6.55 A
	B	3.28 A	6.10 A
	C	3.28 A	6.10 A
Heat (X)		5.27 A	7.05 A
Y		15.01 A	15.01 A

1. The first 30 minutes of cooling operation, (A) will be applied.

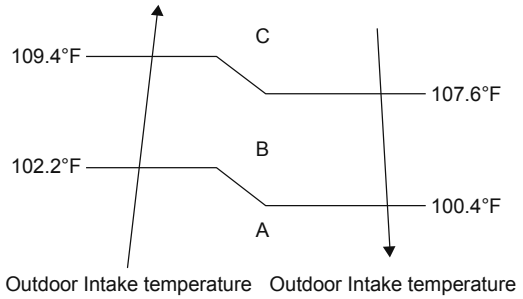

15.1.4 IPM (Power Transistor) Prevention Control

- Overheating Prevention Control
  - When the IPM temperature rises to 212°F, compressor operation will stop immediately.
  - Compressor operation restarts after 3 minutes the temperature decreases to 203°F.
  - If this condition repeats continuously 4 times within 20 minutes, timer LED will be blinking (“F96” is indicated).
- DC Peak Current Control
  - When electric current to IPM exceeds set value of 18.5A, the compressor will stop operate. Then, operation will restart after 3 minutes.
  - If the set value exceeds again more than 30 seconds after the compressor starts, the operation will restart after 2 minutes.
  - If the set value exceeds again within 30 seconds after the compressor starts, the operation will restart after 1 minute. If this condition repeats continuously for 7 times, all indoor and outdoor relays will be cut off, timer LED will be blinking (“F99” is indicated).

15.1.5 Compressor Overheating Prevention Control

- Instructed frequency for compressor operation will be regulated by compressor discharge temperature. The changes of frequency are as below.
- If compressor discharge temperature exceeds 224.6°F, compressor will be stopped, occurs 4 times per 20 minutes, timer LED will be blinking. (“F97” is indicated.)

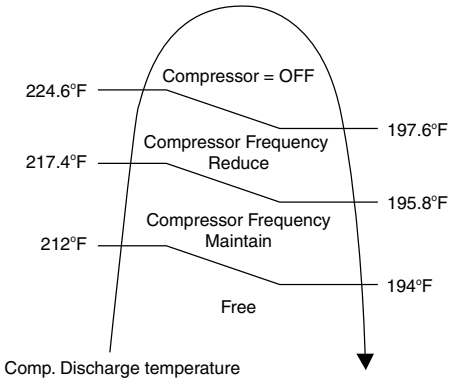

15.1.6 Low Pressure Prevention Control (Gas Leakage Detection)

- Control start conditions
  - For 5 minutes, the compressor continuously operates and outdoor total current is between 0.64A and 0.85A.
  - During Cooling and Soft Dry operations:
    Indoor suction temperature - indoor piping temperature is below 7.2.°F.
  - During Heating operations:
    Indoor piping temperature - indoor suction is under 9°F.
- Control contents
  - Compressor stops (and restart after 3 minutes).
  - If the conditions above happen 2 times within 20 minutes, the unit will:
    - Stop operation
    - Timer LED blinks and “F91” indicated.

15.1.7 Low Frequency Protection Control 1

- When the compressor operates at frequency lower than 24Hz continued for 240 minutes, the operation frequency will be changed to 25Hz for 2 minutes.

15.1.8 Low Frequency Protection Control 2

- When all below conditions comply, minimum limit of compressor will be set.

Temperature, T, for:	Cooling / Soft Dry	Heating
Indoor intake air (°F)	T < 57.2 or T ≥ 86	-
Outdoor air (°F)	T < 55.4 or T ≥ 100.4	T < 57.2 or T ≥ 82.4
Indoor heat exchanger (°F)	T < 86	T ≥ 32

15.2 Protection Control For Cooling & Soft Dry Operation

15.2.1 Outdoor Air Temperature Control

- The maximum current value is regulated when the outdoor air temperature rise above 57.2°F in order to avoid compressor overloading.

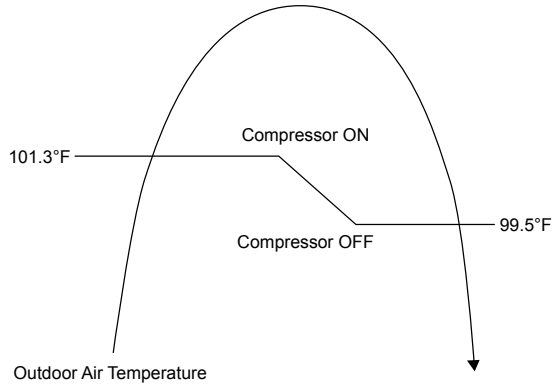

- The compressor will be stopped at outdoor air temperature ≤ -4°F. The unit still operate within the temperature range.

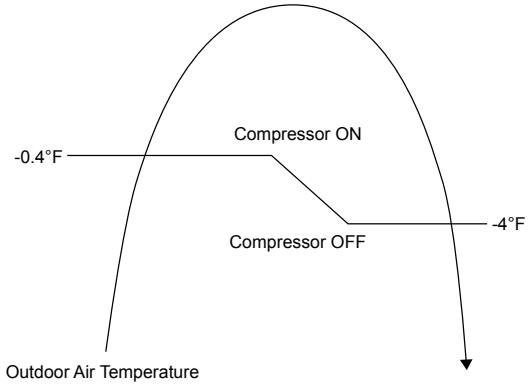

15.2.2 Cooling Overload Control

- Pipe temperature limitation / restriction.
  - Detects the outdoor pipe temperature and carry out restriction / limitation below (Limit the compressor operation frequency)
  - The compressor stops if outdoor pipe temperature exceeds 141.8°F.
  - If the compressor stops 4 times in 20 minutes, Timer LED blinks (“F95” indicated: Outdoor high pressure rise protection)

15.2.3 Freeze Prevention Control 1

- When indoor heat exchanger temperature is lower than 32°F continuously for 6 minutes, compressor will stops operation.
- Compressor will resume its operation 3 minutes after the indoor heat exchanger is higher than 41°F.
- At the same time, indoor fan speed will be higher than during its normal operation.
- If the indoor heat exchanger temperature is higher than 55.4°F for 5 minutes, the fan speed will return to its normal operation.

15.2.4 Freeze Prevention Control 2

- Control start conditions
  - During Cooling operation and soft dry operation
    - During thermo OFF condition, indoor intake temperature is less than 50°F or
    - Compressor stops for freeze prevention control
  - Either one of the conditions above occurs 5 times in 60 minutes.
- Control contents
  - Operation stops
  - Timer LED blinks and “H99” indicated

15.2.5 Dew Prevention Control 1

- To prevent dew formation at indoor unit discharge area.
- This control will be activated if:
  - Outdoor air temperature and Indoor pipe temperature judgment by microcontroller is fulfilled.
  - When Cooling or Dry mode is operated more than 20 minutes or more.
- This control stopped if:
  - Compressor stopped.
  - Remote control setting changed (fan speed / temperature).
  - Outdoor air temperature and indoor intake temperature changed.
- Fan speed, angle of louver (vertical airflow angle) will be adjusted accordingly in this control.
  1. Fan speed will be increased slowly when control is activated until predetermine value.
- Compressor frequency will be regulated accordingly.

15.2.6 Protection Control For Heating Operation

15.2.6.1 Intake Air Temperature Control

Compressor will operate at limited freq., if indoor intake air temperature is 86°F or above.

15.2.6.2 Outdoor Air Temperature Control

- The maximum current value is regulated when the outdoor air temperature rise above 57.2°F in order to avoid compressor overloading.

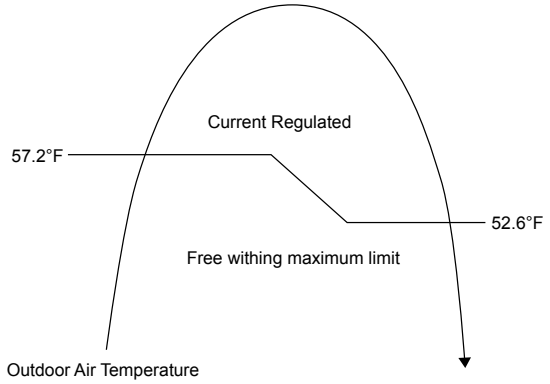

- The compressor will be stopped at outdoor air temperature ≤ -4°F. The unit still operate within the temperature range.

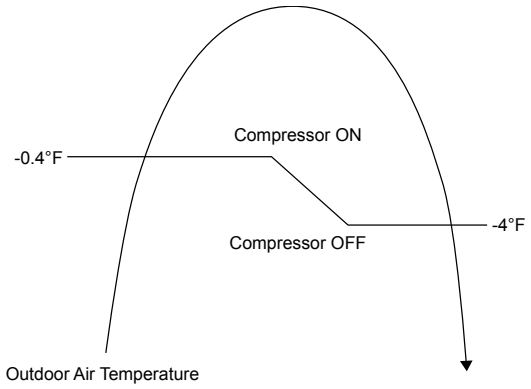

15.2.6.3 Overload Protection Control

- The compressor operating frequency is regulated in accordance to indoor heat exchanger temperature as shown below.
- If the heat exchanger temperature exceeds 140.0°F, compressor will stop.

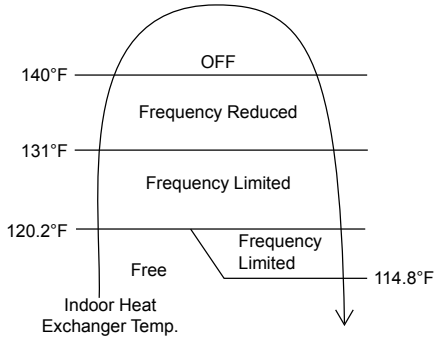

15.2.6.4 Low Temperature Compressor Oil Return Control

- In heating operation, if the outdoor temperature falls below 14°F when compressor starts, the compressor frequency will be regulated up to 600 seconds.

15.2.6.5 Cold Draught Prevention Control

- When indoor pipe temperature is low, cold draught operation starts where indoor fan speed will be reduced or stop.
- Horizontal vane angle may be adjusted in Auto vane setting.

15.2.6.6 Deice Operation

- When outdoor pipe temperature and outdoor air temperature is low, deice operation start where indoor fan motor and outdoor fan motor stop and operation LED blinks. Horizontal vane is closed during auto vane setting.

16. Protection Control (E18RK and E24RK)

16.1 Protection Control For All Operations

16.1.1 Restart Control (Time Delay Safety Control)

- The compressor will not turn on within 3 minutes from the moment operation stops, although the unit is turned on again by pressing OFF/ON button at remote control within this period.
- This control is not applicable if the power supply is cut off and on again.
- This phenomenon is to balance the pressure inside the refrigerant cycle.

16.1.2 30 Seconds Forced Operation

- Once the air conditioner is turned on, the compressor will not stop within 30 seconds in a normal operation although the intake air temperature has reached the thermo-off temperature. However, force stop by pressing the OFF/ON button at the remote control is permitted or the Auto OFF/ON button at indoor unit.
- The reason for the compressor to force operation for minimum 30 seconds is to allow the refrigerant oil run in a full cycle and return back to the outdoor unit.

16.1.3 Total Running Current Control

- When the outdoor unit total running current (AC) exceeds X value, the frequency instructed for compressor operation will be decreased.
- If the running current does not exceed X value for 5 seconds, the frequency instructed will be increased.
- However, if total outdoor unit running current exceeds Y value, compressor will be stopped immediately for 3 minutes.

Model		E18RKUA	E24RKUA
Cool (X)	A	10.85 A	12.47 A
	B	9.84 A	11.46 A
	C	9.84 A	10.16 A
Heat (X)		11.29 A	13.80 A
Y		19.30 A	19.30 A

1. The first 30 minutes of cooling operation, (A) will be applied.

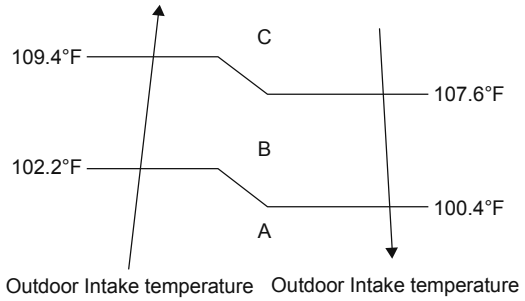

16.1.4 IPM (Power Transistor) Prevention Control

- Overheating Prevention Control
  - When the IPM temperature rises to 212°F, compressor operation will stop immediately.
  - Compressor operation restarts after 3 minutes the temperature decreases to 203°F.
- DC Peak Current Control
  - When electric current to IPM exceeds set value of 29.9A, the compressor will stop operate. Then, operation will restart after 3 minutes.
  - If the set value is exceeded again more than 30 seconds after the compressor starts, the operation will restart after 2 minute.
  - If the set value is exceeded again within 30 seconds after the compressor starts, the operation will restart after 1 minute. If this condition repeats continuously for 7 times, all indoor and outdoor relays will be cut off. Timer LED will be blinking (F99 is indicated).

16.1.5 Compressor Overheating Prevention Control

- Instructed frequency for compressor operation will be regulated by compressor discharge temperature. The changes of frequency are as below.
- If compressor discharge temperature exceeds 233.6°F, compressor will be stopped, occurs 4 times per 20 minutes, timer LED will be blinking. “F97” is indicated.

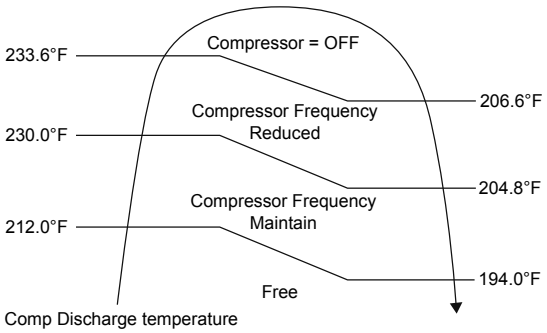

16.1.6 Low Pressure Protection Control (Gas Leakage Detection)

- For 5 minutes, the compressor continuously operates and outdoor total current is between 0.78A and 1.16A.
- During Cooling and Soft Dry operation:
  Indoor suction temperature – indoor piping temperature is below 39.2°F.
- During Heating operations :
  Indoor piping temperature - indoor suction is under 41.0°F.

16.1.7 Low Frequency Protection Control 1

- When the compressor operates at frequency lower than 25Hz continued for 240 minutes, the operation frequency will be changed to 24Hz for 2 minutes.

16.1.8 Low Frequency Protection Control 2

- When all below conditions comply, minimum limit of compressor will be set.

	E18RKUA, E24RKUA	
Temperature, T, for:	Cooling / Soft Dry	Heating
Indoor intake air (°F)	T < 57.2 or T ≥ 86.0	T < 57.2 or T ≥ 82.4
Outdoor air (°F)	T < 55.4 or T ≥ 100.4	T < 39.2 or T ≥ 75.2
Indoor heat exchanger (°F)	T < 86.0	T ≥ 32.0

16.2 Protection Control For Cooling & Soft Dry Operation

16.2.1 Outdoor Air Temperature Control

- The compressor operating frequency is regulated in accordance to the outdoor air temperature as shown in the diagram below.
- This control will begin 1 minute after the compressor starts.
- Compressor frequency will adjust based on outdoor air temperature.

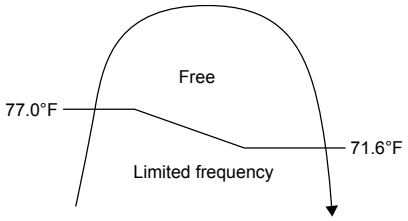

- The compressor will be stopped at outdoor air temperature ≤ -4°F. The unit still operate within the temperature range.

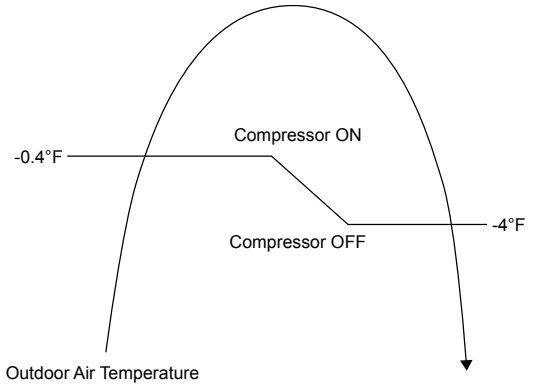

16.2.2 Cooling Overload Control

- Pipe temperature limitation / restriction.
  - Detects the outdoor pipe temperature and carry out restriction / limitation below (Limit the compressor operation frequency)
  - The compressor stops if outdoor pipe temperature exceeds 145.4°F.
  - If the compressor stops 4 times in 20 minutes, Timer LED blinks (“F95” indicated: Outdoor high pressure rise protection)

16.2.3 Freeze Prevention Control 1

- When indoor heat exchanger temperature is lower than 32°F continuously for 6 minutes, compressor will stops operation.
- Compressor will resume its operation 3 minutes after the indoor heat exchanger is higher than 41.0°F.
- At the same time, indoor fan speed will be higher than during its normal operation.
- If the indoor heat exchanger temperature is higher than 55.4°F for 5 minutes, the fan speed will return to its normal operation.

16.2.4 Freeze Prevention Control 2

- Control start conditions
  - During Cooling operation and soft dry operation
    - During thermo OFF condition, indoor intake temperature is less than 50.0°F or
    - Compressor stops for freeze prevention control
  - Either one of the conditions above occurs 5 times in 60 minutes.
- Control contents
  - Operation stops
  - Timer LED blinks and “H99” indicated

16.2.5 Dew Prevention Control 1

- To prevent dew formation at indoor unit discharge area.
- This control will be activated if:
  - Outdoor air temperature and Indoor pipe temperature judgment by microcontroller is fulfilled.
  - When Cooling or Dry mode is operated more than 20 minutes or more.
- This control stopped if:
  - Compressor stopped.
  - Remote control setting changed (fan speed / temperature).
  - Outdoor air temperature and indoor intake temperature changed.
- Fan speed, angle of louver (vertical airflow angle) will be adjusted accordingly in this control.
  1. Fan speed will be increased slowly when control is activated until predetermine value.
- Compressor frequency will be regulated accordingly.

16.2.6 Protection Control For Heating Operation

16.2.6.1 Intake Air Temperature Control

Compressor will operate at limited freq., if indoor intake air temperature is 86.0°F or above.

16.2.6.2 Outdoor Air Temperature Control

- The Max current value is regulated when the outdoor air temperature rise above 57.2°F in order to avoid compressor overloading.
- The compressor will be stopped at outdoor air temperature ≤ -4°F. The unit still operate within the temperature range.

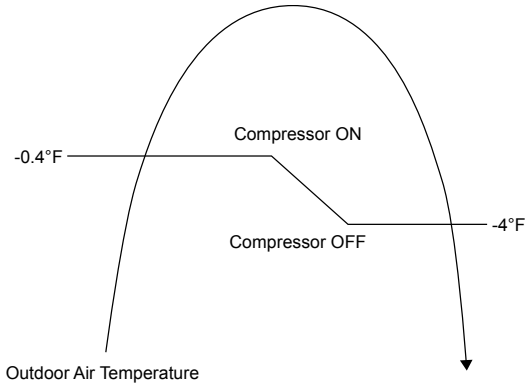

16.2.6.3 Overload Protection Control

- The compressor operating frequency is regulated in accordance to indoor heat exchanger temperature as shown below.
- If the heat exchanger temperature exceeds 140.0°F, compressor will stop.

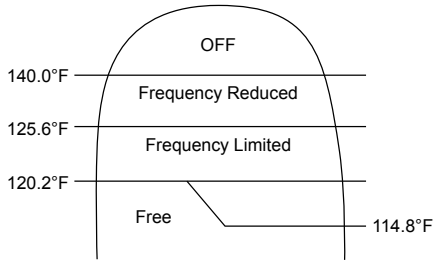

16.2.6.4 Low Temperature Compressor Oil Return Control

- In heating operation, if the indoor temperature falls below 17.6°F when compressor starts, the compressor frequency will be regulated up to 600 seconds.

16.2.6.5 Cold Draught Prevention Control

- When indoor pipe temperature is low, cold draught operation starts where indoor fan speed will be reduced or stop.
- Horizontal vane angle may be adjusted in Auto vane setting.

16.2.6.6 Deice Operation

When outdoor pipe temperature and outdoor air temperature is low, deice operation start where indoor fan motor and outdoor fan motor stop and operation LED blinks. Horizontal vane is closed during auto vane setting.

17. Servicing Mode

17.1 Auto Off/On Button

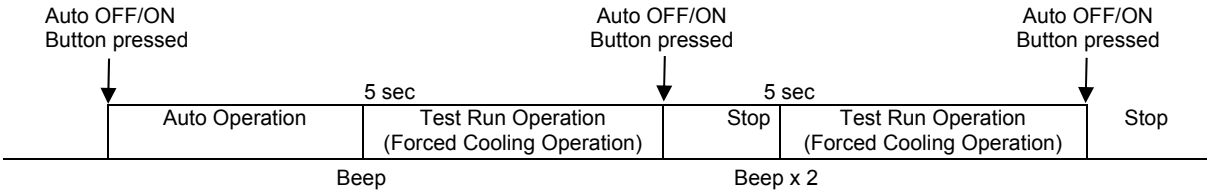

1 AUTO OPERATION MODE
The Auto operation will be activated immediately once the Auto OFF/ON button is pressed. This operation can be used to operate air conditioner with limited function if remote control is misplaced or malfunction.

2 TEST RUN OPERATION (FOR PUMP DOWN/SERVICING PURPOSE)
The Test Run operation will be activated if the Auto OFF/ON button is pressed continuously for more than 5 seconds. A “beep” sound will heard at the fifth seconds, in order to identify the starting of Test Run operation (Forced cooling operation). Within 5 minutes after Forced cooling operation start, the Auto OFF/ON button is pressed for more than 5 seconds. A 2 “beep” sounds will heard at the fifth seconds, in order to identify the starting of Forced heating operation.

The Auto OFF/ON button may be used together with remote control to set / change the advance setting of air conditioner operation.

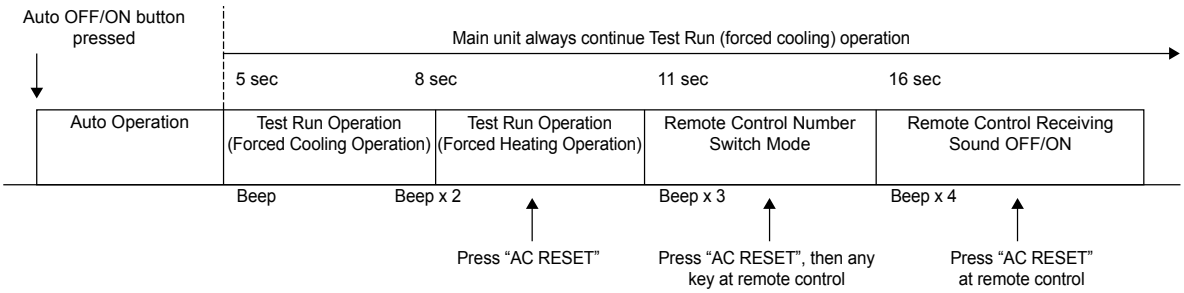

3 REMOTE CONTROL NUMBER SWITCH MODE
The Remote Control Number Switch Mode will be activated if the Auto OFF/ON button is pressed continuously for more than 11 seconds (3 “beep” sounds will occur at 11th seconds to identify the Remote Control Number Switch Mode is in standby condition) and press “AC RESET” button and then press any button at remote control to transmit and store the desired transmission code to the EEPROM.

There are 4 types of remote control transmission code could be selected and stored in EEPROM of indoor unit. The indoor unit will only operate when received signal with same transmission code from remote control. This could prevent signal interference when there are 2 or more indoor units installed nearby together.
To change remote control transmission code, short or open jumpers at the remote control printed circuit board.

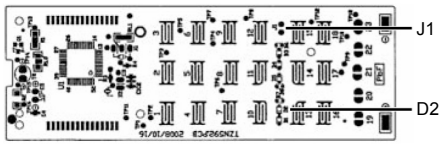

Remote Control Printed Circuit Board		
Jumper A (J1)	Jumper B (D2)	Remote Control No.
Short	Open	A (Default)
Open	Open	B
Short	Short	C
Open	Short	D

- During Remote Control Number Switch Mode, press any button at remote control to transmit and store the transmission code to the EEPROM.

4 REMOTE CONTROL RECEIVING SOUND OFF/ON MODE
The Remote Control Receiving Sound OFF/ON Mode will be activated if the Auto OFF/ON button is pressed continuously for more than 16 seconds (4 “beep” sounds will occur at 16th seconds to identify the Remote Control Receiving Sound OFF/ON Mode is in standby condition) and press “AC Reset” button at remote control.

Press Auto OFF/ON button to toggle remote control receiving sound.
- Short “beep”: Turn OFF remote control receiving sound.
- Long “beep”: Turn ON remote control receiving sound.

After Auto OFF/ON button is pressed, the 20 seconds counter for Remote Control Receiving Sound OFF/ON Mode is restarted.

17.2 Cooling Only Operation (Single connection Only, Multi connection please refer to Multi outdoor manual)

17.2.1 How to activate and deactivate Cooling Only Operation

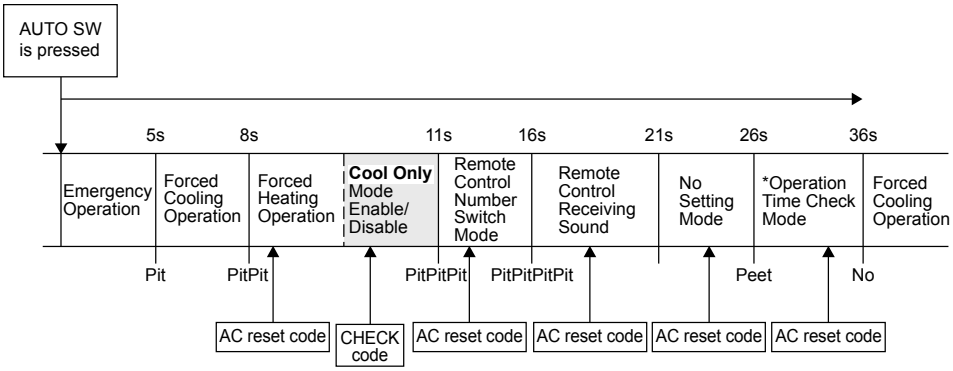

The default setting is "Cool Only" mode disable.

- To enable the "Cool Only" mode, press the AUTO OFF/ON SW for more than 8s and less than 11s, “Pit Pit” sound will be heard, then release the AUTO OFF/ON SW and press remote controller CHECK button. A short “Pit” sound will be heard. “Cool Only” mode is now enable.
- To disable the "Cool Only" mode, press the AUTO OFF/ON SW for more than 8s and less than 11s, “Pit Pit” sound will be heard, then release the AUTO OFF/ON SW and press remote controller CHECK button. A long "Pit" sound will be heard. “Cool Only” mode is now disable.

17.2.2 Operation mode during Cooling Only Operation

The table below shows the operation mode comparison when cooling only operation mode activated and deactivated.

Operation mode	Cooling Only Operation Mode Activated	Cooling Only Operation Mode Deactivated
AUTO	After 30s sampling, regardless of indoor intake or outdoor intake temperature judgement, the unit will run Cooling or DRY operation.	After 30s sampling, the unit will judge the operation mode base on remote controller temperature setting and Indoor Intake Sensor (New Auto Mode) or Outdoor Intake Sensor (Old Auto Mode)
HEAT	The unit will stop and Power LED blinking.	The unit will run Heating operation.
COOL	The unit will run Cooling operation.	The unit will run Cooling operation.
DRY	The unit will run DRY operation.	The unit will run Dry operation.
Force Heating	The unit will run Force Cooling operation.	The unit will run Force Heating operation.
AUTO (with Timer)	The unit will turn ON by the timer and run Auto Operation. After 30s sampling, regardless of indoor intake or outdoor intake temperature judgement, the unit will run Cooling or DRY operation.	The unit will turn ON by the timer and run Auto Operation. After 30s sampling, the unit will judge the operation mode base on remote controller temperature setting and Indoor Intake Sensor (New Auto Mode) or Outdoor Intake Sensor (Old Auto Mode)
HEAT (with Timer)	The unit will not turn ON by the Timer. Power LED blinking.	The unit will turn ON by the timer and run Heating Operation.
COOL (with Timer)	The unit will turn ON by the Timer and run Cooling operation.	The unit will turn ON by the timer and run Cooling Operation.
DRY (with Timer)	The unit will turn ON by the Timer and run DRY operation.	The unit will turn ON by the timer and run Cooling Dry Operation.

**** Power LED blinking = 2.5s ON, 0.5s OFF**

17.3 Remote Control Button

17.3.1 SET Button

- To check remote control transmission code and store the transmission code to EEPROM
  - Press “Set” button continuously for 10 seconds by using pointer
  - Press “Timer Set” button unit a “beep” sound is heard as confirmation of transmission code change.

17.3.2 RESET (RC)

- To clear and restore the remote control setting to factory default.
  - Press once to clear the memory

17.3.3 RESET (AC)

- To restore the unit’s setting to factory default.
  - Press once to restore the unit’s setting

17.3.4 TIMER ▲

- To change indoor unit indicator’s LED intensity:
  - Press continuously for 5 seconds.

17.3.5 TIMER ▼

- To change remote control display from Degree Celsius (°C) to Degree Fahrenheit (°F)
  - Press continuously for 10 seconds.

17.3.6 CLOCK Button

- To change the remote control time format:
  - Press for more than 5 seconds

18. Troubleshooting Guide

18.1 Refrigeration Cycle System

In order to diagnose malfunctions, make sure that there are no electrical problems before inspecting the refrigeration cycle. Such problems include insufficient insulation, problem with the power source, malfunction of a compressor and a fan.
The normal outlet air temperature and pressure of the refrigeration cycle depends on various conditions, the standard values for them are shown in the table on the right.

Normal Pressure and Outlet Air Temperature (Standard)

	Gas Pressure PSI (kg/cm^2G)	Outlet air Temperature (°F)
Cooling Mode	130.53 ~ 174.04 (9 ~ 12)	53.6 ~ 60.8
Heating Mode	333.58 ~ 420.60 (23 ~ 29)	96.8 ~ 113

Condition: Indoor fan speed = High
Outdoor temperature 95°F at cooling mode and 44.6°F at heating mode.
Compressor operate at rated frequency

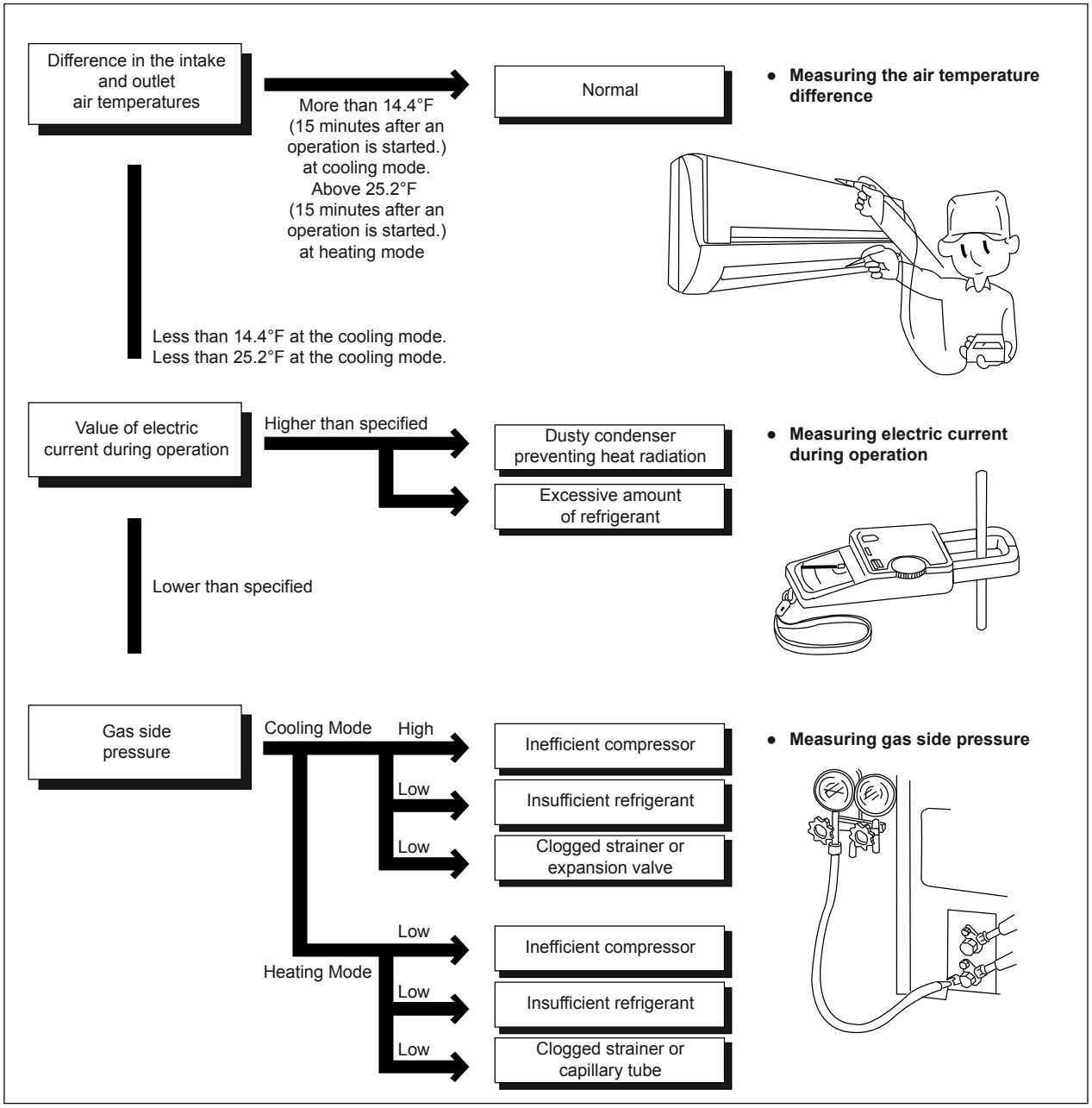

- **Measuring the air temperature difference**
- **Measuring electric current during operation**
- **Measuring gas side pressure**

18.1.1 Relationship between the condition of the air conditioner and pressure and electric current

Condition of the air conditioner	Cooling Mode			Heating Mode		
	Low Pressure	High Pressure	Electric current during operating	Low Pressure	High Pressure	Electric current during operating
Insufficient refrigerant (gas leakage)	↘	↘	↘	↘	↘	↘
Clogged capillary tube or Strainer	↘	↘	↘	↗	↗	↗
Short circuit in the indoor unit	↘	↘	↘	↗	↗	↗
Heat radiation deficiency of the outdoor unit	↗	↗	↗	↘	↘	↘
Inefficient compression	↗	↘	↘	↗	↘	↘

- Carry out the measurements of pressure, electric current, and temperature fifteen minutes after an operation is started.

18.2 Breakdown Self Diagnosis Function

18.2.1 Self Diagnosis Function (Three Digits Alphanumeric Code)

- Once error occurred during operation, the unit will stop its operation, and Timer LED blinks.
- Although Timer LED goes off when power supply is turned off, if the unit is operated under a breakdown condition, the LED will ON again.
- In operation after breakdown repair, the Timer LED will not blink. The last error code (abnormality) will be stored in IC memory.

18.2.2 To Make a Diagnosis

1 Timer LED starts to blink and the unit automatically stops the operation.
2 Press the CHECK button on the remote control continuously for 5 seconds.
3 "- -" will be displayed on the remote control display.
Note: Display only for "- -" (No signal transmission, no receiving sound and no Power LED blinking)
4 Press the TIMER ▲ or ▼ button on the remote control. The code "H00" (no abnormality) will be displayed and signal will be transmit to the main unit.
5 Each press of the button (▲ or ▼) will increase error code number and transmit error code signal to the main unit.
6 When the latest abnormality code on the main unit and code transmitted from the remote control are matched, Power LED will light up for 30 seconds and a "beep" sound (continuously for 4 seconds) will be heard. If no codes are matched, Power LED will light up for 0.5 seconds and no sound will be heard.
7 The breakdown diagnosis mode will be canceled unless pressing the CHECK button continuously for 5 seconds or operating the unit for 30 seconds.
8 The LED will be off if the unit is turned off or the RESET button on the main unit is pressed.

18.2.3 To Display Memorized Error Code (Protective Operation)

1 Turn power on.
2 Press the CHECK button on the remote control
3 "- -" will be displayed on the remote control display.
Note: Display only for "- -" (No signal transmission, no receiving sound and no Power LED blinking)
4 Press the TIMER ▲ or ▼ button on the remote control. The code "H00" (no abnormality) will be displayed and signal will be transmit to the main unit.
5 Each press of the button (▲ or ▼) will increase error code number and transmit error code signal to the main unit.
6 When the latest abnormality code on the main unit and code transmitted from the remote control are matched, Power LED will light up for 30 seconds and a "beep" sound (continuously for 4 seconds) will be heard. If no codes are matched, Power LED will light up for 0.5 seconds and no sound will be heard.
7 The breakdown diagnosis mode will be canceled unless pressing the CHECK button continuously for 5 seconds or operating the unit for 30 seconds.
8 The same diagnosis can be repeated by turning power on again.

18.2.4 To Clear Memorized Error Code after Repair (Protective Operation)

1 Turn power on (in standby condition).
2 Press the AUTO button for 5 seconds (a "beep" sound is heard) on the main unit to operate the unit at Forced Cooling Operation Mode.
3 Press the CHECK button on the remote control for about 1 second with a pointed object to transmit signal to main unit. A "beep" sound is heard, and the Error Code is cleared.

18.2.5 Temporary Operation (Depending On Breakdown Status)

1 Press the Auto OFF/ON button on the main unit (a "beep" sound is heard) to operate the unit. (Remote control is enable again).
2 The unit can be temporarily be used until repaired.

Error Code	Operation	Temporary items
H23	Cooling	Emergency Operation with limited power
H27, H28	Cooling, Heating	

18.3 Error Code Table

Diagnosis display	Abnormality / Protection control	Abnormality Judgement	Protection operation	Problem	Check location
H00	No memory of failure	—	Normal operation	—	—
H11	Indoor/outdoor abnormal communication	After operation for 1 minute	Indoor fan only operation can start by entering into force cooling operation	Indoor/outdoor communication not establish	• Indoor/outdoor wire terminal • Indoor/outdoor PCB • Indoor/outdoor connection wire
H12	Indoor unit capacity unmatched	90s after power supply	—	Total indoor capability more than maximum limit or less than minimum limit, or number of indoor unit less than two.	• Indoor/outdoor connection wire • Indoor/outdoor PCB • Specification and combination table in catalogue
H14	Indoor intake air temperature sensor abnormality	Continuous for 5s	—	Indoor intake air temperature sensor open or short circuit	• Indoor intake air temperature sensor lead wire and connector
H15	Compressor temperature sensor abnormality	Continuous for 5s	—	Compressor temperature sensor open or short circuit	• Compressor temperature sensor lead wire and connector
H16	Outdoor current transformer (CT) abnormality	—	—	Current transformer faulty or compressor faulty	• Outdoor PCB faulty or compressor faulty
H19	Indoor fan motor merchanism lock	Continuous happen for 7 times	—	Indoor fan motor lock or feedback abnormal	• Fan motor lead wire and connector • Fan motor lock or block
H23	Indoor heat exchanger temperature sensor abnormality	Continuous for 5s	—	Indoor heat exchanger temperature sensor open or short circuit	• Indoor heat exchanger temperature sensor lead wire and connector
H24	Indoor heat exchanger temperature sensor 2 abnormality	Continuous for 5s	—	Indoor heat exchanger temperature sensor 2 open or short circuit	• Indoor heat exchanger temperature sensor 2 lead wire and connector
H27	Outdoor air temperature sensor abnormality	Continuous for 5s	—	Outdoor air temperature sensor open or short circuit	• Outdoor air temperature sensor lead wire and connector
H28	Outdoor heat exchanger temperature sensor 1 abnormality	Continuous for 5s	—	Outdoor heat exchanger temperature sensor 1 open or short circuit	• Outdoor heat exchanger temperature sensor 1 lead wire and connector
H30	Outdoor discharge pipe temperature sensor abnormality	Continuous for 5s	—	Outdoor discharge pipe temperature sensor open or short circuit	• Outdoor discharge pipe temperature sensor lead wire and connector
H32	Outdoor heat exchanger temperature sensor 2 abnormality	Continuous for 5s	—	Outdoor heat exchanger temperature sensor 2 open or short circuit	• Outdoor heat exchanger temperature sensor 2 lead wire and connector
H33	Indoor / outdoor misconnection abnormality	—	—	Indoor and outdoor rated voltage different	• Indoor and outdoor units check
H36	Outdoor gas pipe temperature sensor abnormality	Continuous for 5s	Heating protection operation only	Outdoor gas pipe temperature sensor open or short circuit	• Outdoor gas pipe temperature sensor lead wire and connector
H37	Outdoor liquid pipe temperature sensor abnormality	Continuous for 5s	Cooling protection operation only	Outdoor liquid pipe temperature sensor open or short circuit	• Outdoor liquid pipe temperature sensor lead wire and connector
H38	Indoor/Outdoor mismatch (brand code)	—	—	Brand code not match	• Check indoor unit and outdoor unit.
H39	Abnormal indoor operating unit or standby units	3 times happen within 40 minutes	—	Wrong wiring and connecting pipe, expansion valve abnormality, indoor heat exchanger sensor open circuit	• Check the indoor/outdoor connection wire and connection pipe. • Indoor heat exchanger sensor lead wire and connector. • Expansion valve and lead wire and connector system.
H41	Abnormal wiring or piping connection	—	—	Wrong wiring and connecting pipe, expansion valve abnormality	• Check indoor/outdoor connection wire and connection pipe • Expansion valve and lead wire and connector

Diagnosis display	Abnormality / Protection control	Abnormality Judgement	Protection operation	Problem	Check location
H59	ECONAVI sensor abnormality	Continuous for 25s	—	ECOANVI sensor open or short circuit	• ECONAVI sensor (defective or disconnected) • ECONAVI PCB
H64	Outdoor high pressure sensor abnormality	Continuous for 1 minutes	—	High pressure sensor open circuit during compressor	• High pressure sensor • Lead wire and connector
H97	Outdoor fan motor mechanism lock	2 times happen within 30 minutes	—	Outdoor fan motor lock or feedback abnormal	• Outdoor fan motor lead wire and connector • Fan motor lock or block
H98	Indoor high pressure protection	—	—	Indoor high pressure protection (Heating)	• Check indoor heat exchanger • Air filter dirty • Air circulation short circuit
H99	Indoor operating unit freeze protection	—	—	Indoor freeze protection (Cooling)	• Check indoor heat exchanger • Air filter dirty • Air circulation short circuit
F11	4-way valve switching abnormality	4 times happen within 30 minutes	—	4-way valve switching abnormal	• 4-way valve • Lead wire and connector.
F17	Indoor standby units freezing abnormality	3 times happen within 40 minutes	—	Wrong wiring and connecting pipe, expansion valve leakage, indoor heat exchanger sensor open circuit	• Check indoor/outdoor connection wire and pipe • Indoor heat exchanger sensor lead wire and connector • Expansion valve lead wire and connector.
F90	Power factor correction (PFC) circuit protection	4 times happen within 10 minutes	—	Power factor correction circuit abnormal	• Outdoor PCB faulty
F91	Refrigeration cycle abnormality	2 times happen within 20 minutes	—	Refrigeration cycle abnormal	• Insufficient refrigerant or valve close
F93	Compressor abnormal revolution	4 times happen within 20 minutes	—	Compressor abnormal revolution	• Power transistor module faulty or compressor lock
F94	Compressor discharge overshoot protection	4 times happen within 30 minutes	—	Compressor discharge pressure overshoot	• Check refrigeration system
F95	Outdoor cooling high pressure protection	4 times happen within 20 minutes	—	Cooling high pressure protection	• Check refrigeration system • Outdoor air circuit
F96	Power transistor module overheating protection	4 times happen within 30 minutes	—	Power transistor module overheat	• PCB faulty • Outdoor air circuit (fan motor)
F97	Compressor overheating protection	3 times happen within 30 minutes	—	Compressor overheat	• Insufficient refrigerant
F98	Total running current protection	3 times happen within 20 minutes	—	Total current protection	• Check refrigeration system • Power source or compressor lock
F99	Outdoor direct current (DC) peak detection	Continuous happen for 7 times	—	Power transistor module current protection	• Power transistor module faulty or compressor lock

Note:
"○" – Frequency measured and fan speed fixed

The memory data of error code is erased when the power supply is cut off, or press the Auto Switch until "beep" sound heard following by pressing the CHECK button at remote control.
Although operation forced to stop when abnormality detected, emergency operation is possible for certain errors (refer to Error Code Table) by using remote control or Auto OFF/ON button at indoor unit. However, the remote control signal receiving sound is changed from one "beep" to four "beep" sounds.

18.4 Self-diagnosis Method

18.4.1 H11 (Indoor/Outdoor Abnormal Communication)

Malfunction Decision Conditions

- During startup and operation of cooling and heating, the data received from outdoor unit in indoor unit signal transmission is checked whether it is normal.

Malfunction Caused

- Faulty indoor unit PCB.
- Faulty outdoor unit PCB.
- Indoor unit-outdoor unit signal transmission error due to wrong wiring.
- Indoor unit-outdoor unit signal transmission error due to breaking of wire in the connection wires between the indoor and outdoor units.
- Indoor unit-outdoor unit signal transmission error due to disturbed power supply waveform.

Troubleshooting

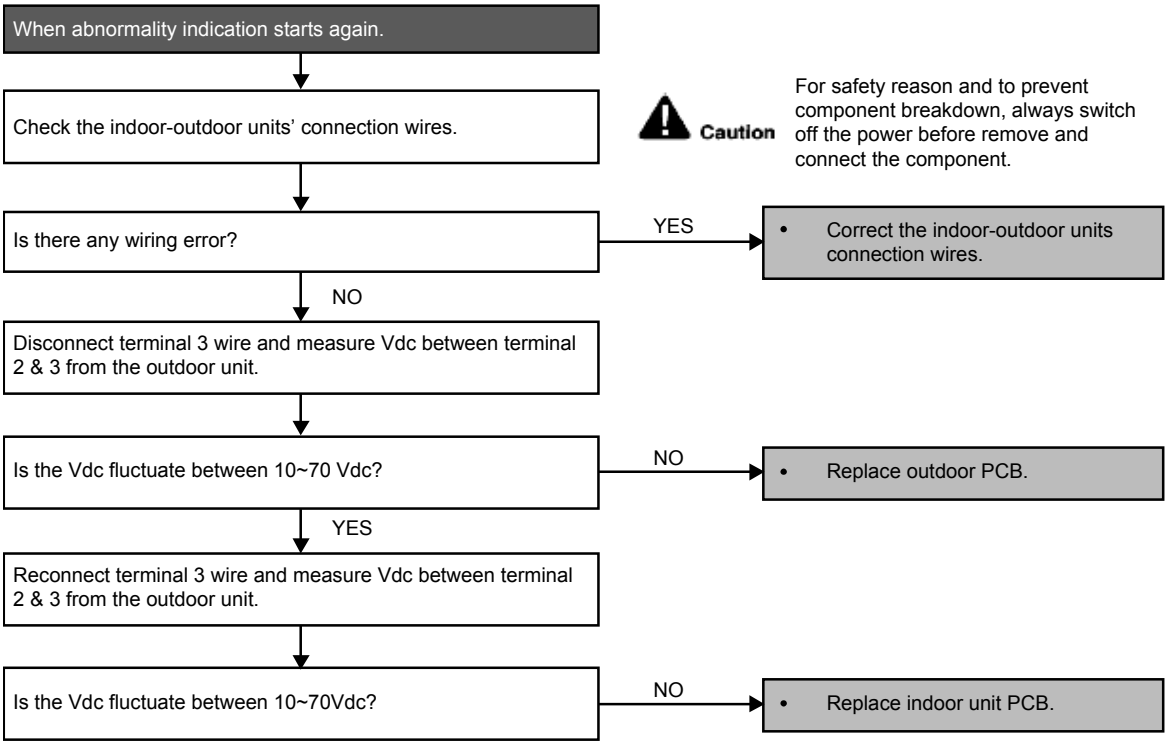

18.4.2 H12 (Indoor/Outdoor Capacity Rank Mismatched)

Malfunction Decision Conditions

- During startup, error code appears when different types of indoor and outdoor units are interconnected.

Malfunction Caused

- Wrong models interconnected.
- Wrong indoor unit or outdoor unit PCBs mounted.
- Indoor unit or outdoor unit PCBs defective.
- Indoor-outdoor unit signal transmission error due to wrong wiring.
- Indoor-outdoor unit signal transmission error due to breaking of wire 3 in the connection wires between the indoor and outdoor units.

Troubleshooting

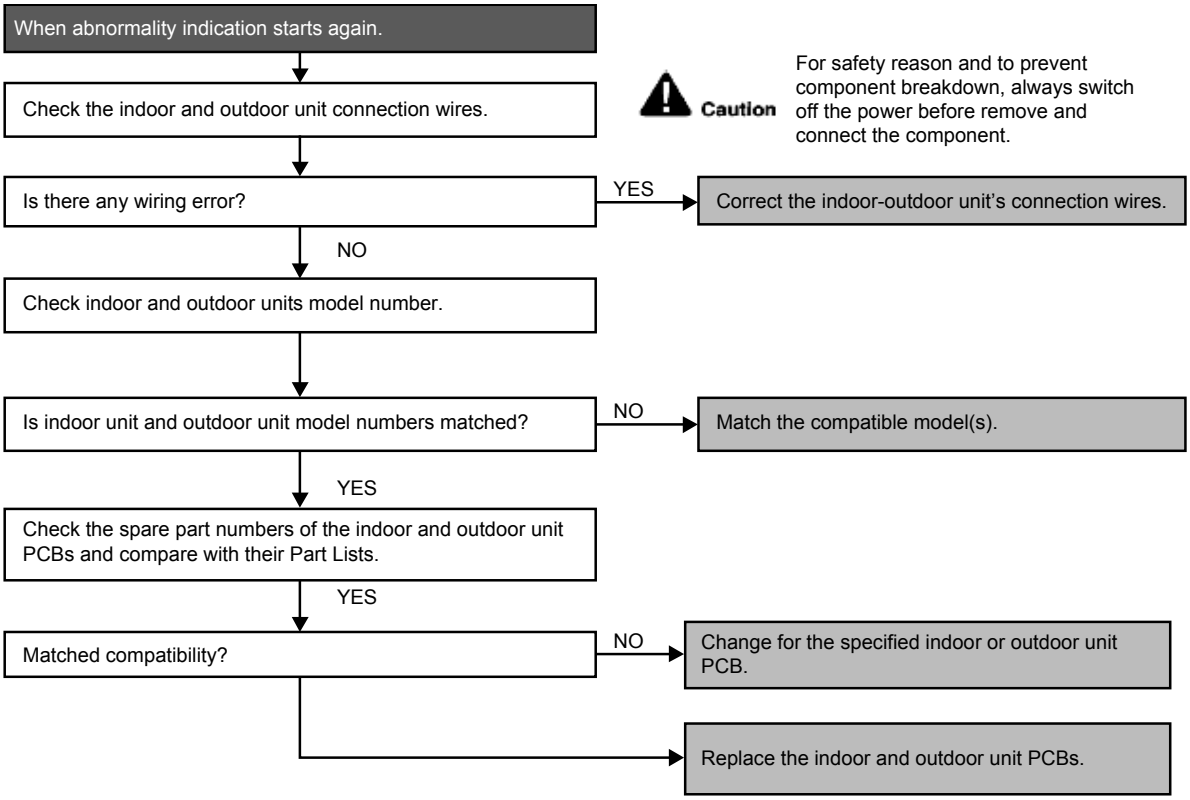

18.4.3 H14 (Indoor Intake Air Temperature Sensor Abnormality)

Malfunction Decision Conditions

- During startup and operation of cooling and heating, the temperatures detected by the indoor intake air temperature sensor are used to determine sensor errors.

Malfunction Caused

- Faulty connector connection.
- Faulty sensor.
- Faulty PCB.

Troubleshooting

When abnormality indication starts again.

↓

Check the connector connection:
- Turn off the power.
- Check the connector connection.

Caution: For safety reason and to prevent component breakdown, always switch off the power before remove and connect the component.

↓

Is the connector connection normal?

NO →
- Connector poor contact.
- Correct the connection.

YES ↓

Check the indoor intake air temperature sensor:
- Plug out connector from the indoor unit PCB.
- Measure the resistance of the indoor intake air temperature sensor.

↓

Is the measured resistance of the indoor intake air temperature sensor matches the value specified in its characteristic chart?

NO →
- Defect in indoor intake air temperature sensor.
- Replace the indoor intake air temperature sensor.

YES →
- Defect in indoor unit PCB.
- Replace the indoor unit PCB.

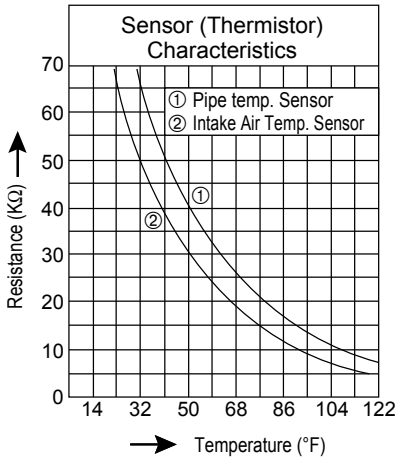

18.4.4 H15 (Compressor Temperature Sensor Abnormality)

Malfunction Decision Conditions

- During startup and operation of cooling and heating, the temperatures detected by the outdoor compressor temperature sensor are used to determine sensor errors.

Malfunction Caused

- Faulty connector connection.
- Faulty sensor.
- Faulty PCB.

Troubleshooting

When abnormality indication starts again.

↓

Check the connector connection:
- Turn off the power.
- Check the connector connection.

Caution: For safety reason and to prevent component breakdown, always switch off the power before remove and connect the component.

↓

Is the connector connection normal?

NO →
- Connector poor contact.
- Correct the connection.

YES ↓

Check the outdoor compressor temperature sensor:
- Plug out connector from the outdoor unit PCB.
- Measure the resistance of the outdoor compressor temperature sensor.

↓

Is the measured resistance of the outdoor compressor temperature sensor matches the value specified in its characteristic chart?

NO →
- Defect in outdoor compressor temperature sensor.
- Replace the outdoor compressor temperature sensor.

YES →
- Defect in outdoor unit PCB.
- Replace the outdoor unit PCB.

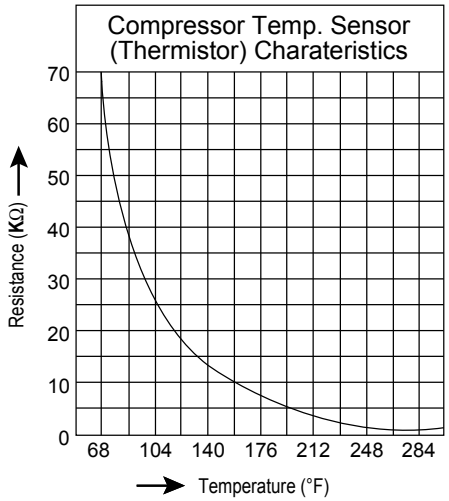

18.4.5 H16 (Outdoor Current Transformer)

Malfunction Decision Conditions

- An input current, detected by Current Transformer CT, is below threshold value when the compressor is operating at certain frequency value for 3 minutes.

Malfunction Caused

- Lack of gas.
- Broken CT (current transformer).
- Broken Outdoor PCB.

Troubleshooting

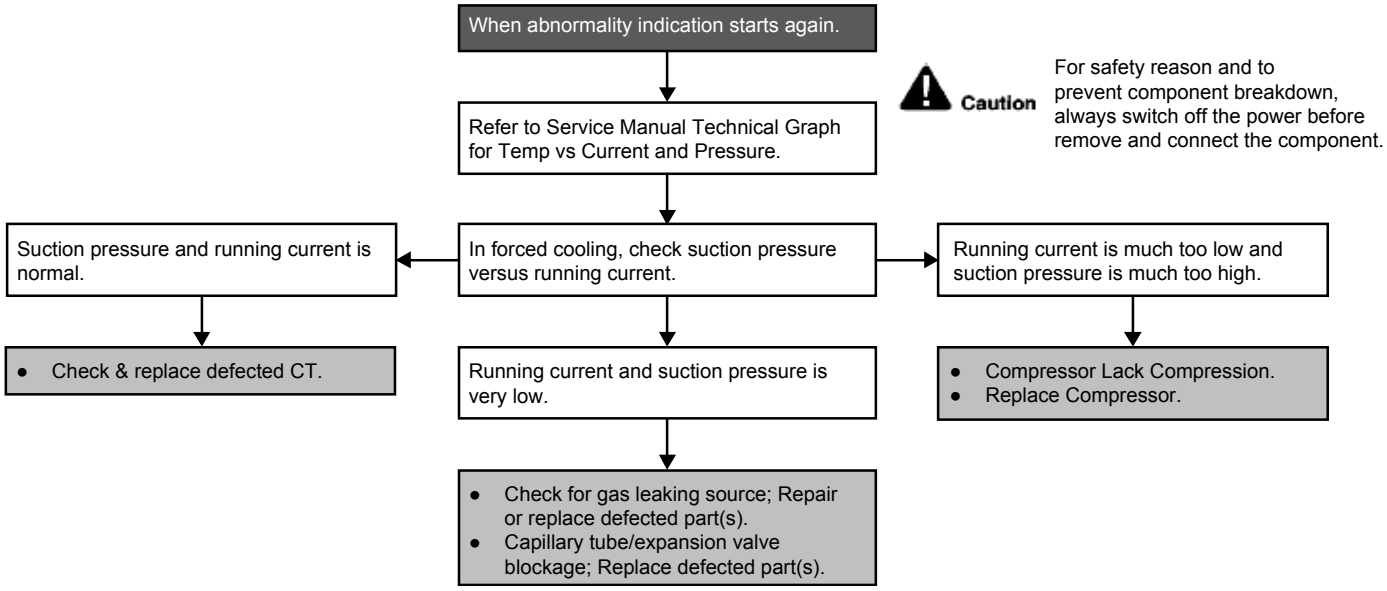

18.4.6 H19 (Indoor Fan Motor – DC Motor Mechanism Locked)

Malfunction Decision Conditions

- The rotation speed detected by the Hall IC during fan motor operation is used to determine abnormal fan motor (feedback of rotation > 2550rpm or < 50rpm)

Malfunction Caused

- Operation stops due to short circuit inside the fan motor winding.
- Operation stops due to breaking of wire inside the fan motor.
- Operation stops due to breaking of fan motor lead wires.
- Operation stops due to Hall IC malfunction.
- Operation error due to faulty indoor unit PCB.

Troubleshooting

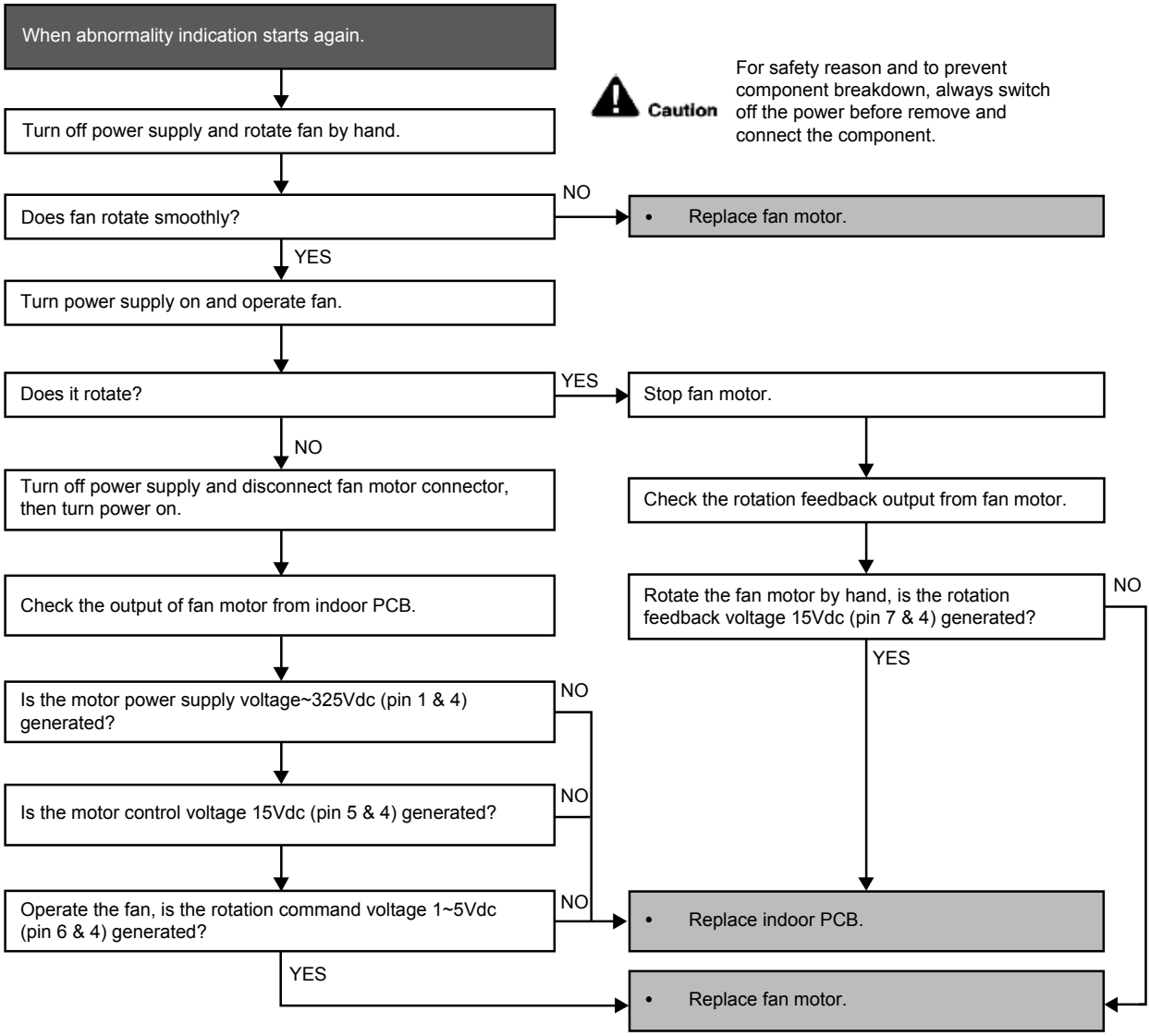

18.4.7 H23 (Indoor Pipe Temperature Sensor Abnormality)

Malfunction Decision Conditions

- During startup and operation of cooling and heating, the temperatures detected by the indoor heat exchanger temperature sensor are used to determine sensor errors.

Malfunction Caused

- Faulty connector connection.
- Faulty sensor.
- Faulty PCB.

Troubleshooting

When abnormality indication starts again.

↓

Check the connector connection:
- Plug out connector from the indoor unit PCB.
- Measure the resistance of the indoor pipe temperature sensor.

Caution For safety reason and to prevent component breakdown, always switch off the power before remove and connect the component.

↓

Is the connector connection normal?

NO →
- Connector poor contact.
- Correct the connection.

YES ↓

Check the outdoor air temperature sensor:
- Plug out connector from the outdoor unit PCB.
- Measure the resistance of the outdoor intake air temperature sensor.

↓

Is the measured resistance of the outdoor intake air temperature sensor matches the value specified in its characteristic chart?

NO →
- Defect in outdoor intake air temperature sensor.
- Replace the outdoor intake air temperature sensor.

YES →
- Defect in outdoor unit PCB.
- Replace the outdoor unit PCB.

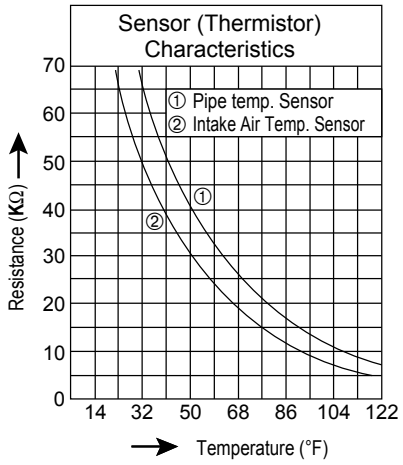

18.4.8 H27 (Outdoor Air Temperature Sensor Abnormality)

Malfunction Decision Conditions

- During startup and operation of cooling and heating, the temperatures detected by the outdoor air temperature sensor are used to determine sensor errors.

Malfunction Caused

- Faulty connector connection.
- Faulty sensor.
- Faulty PCB.

Troubleshooting

When abnormality indication starts again.

↓

Check the connector connection:
- Turn off the power.
- Check the connector connection.

Caution: For safety reason and to prevent component breakdown, always switch off the power before remove and connect the component.

↓

Is the connector connection normal?

NO →
- Connector poor contact.
- Correct the connection.

YES ↓

Check the outdoor air temperature sensor:
- Plug out connector from the outdoor unit PCB.
- Measure the resistance of the outdoor air temperature sensor.

↓

Is the measured resistance of the outdoor air temperature sensor matches the value specified in its characteristic chart?

NO →
- Defect in outdoor air temperature sensor.
- Replace the outdoor air temperature sensor.

YES →
- Defect in outdoor unit PCB.
- Replace the outdoor unit PCB.

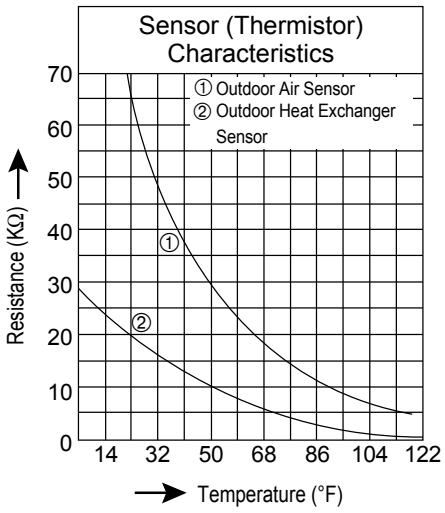

18.4.9 H28 (Outdoor Pipe Temperature Sensor Abnormality)

Malfunction Decision Conditions

- During startup and operation of cooling and heating, the temperatures detected by the outdoor pipe temperature sensor are used to determine sensor errors.

Malfunction Caused

- Faulty connector connection.
- Faulty sensor.
- Faulty PCB.

Troubleshooting

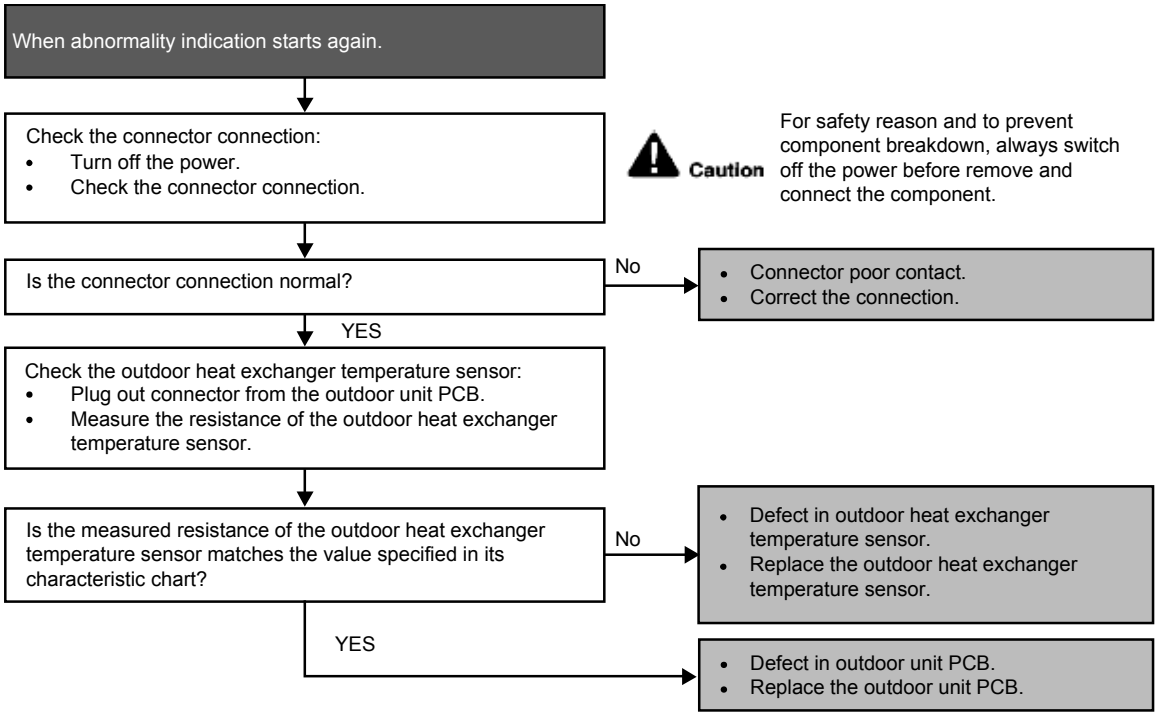

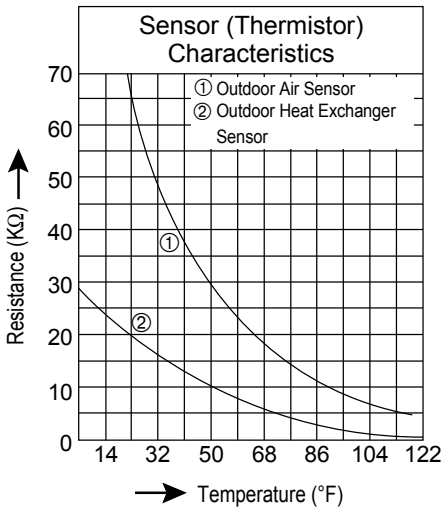

18.4.10 H30 (Compressor Discharge Temperature Sensor Abnormality)

Malfunction Decision Conditions

- During startup and operation of cooling and heating, the temperatures detected by the outdoor discharge pipe temperature sensor are used to determine sensor errors.

Malfunction Caused

- Faulty connector connection.
- Faulty sensor.
- Faulty PCB.

Troubleshooting

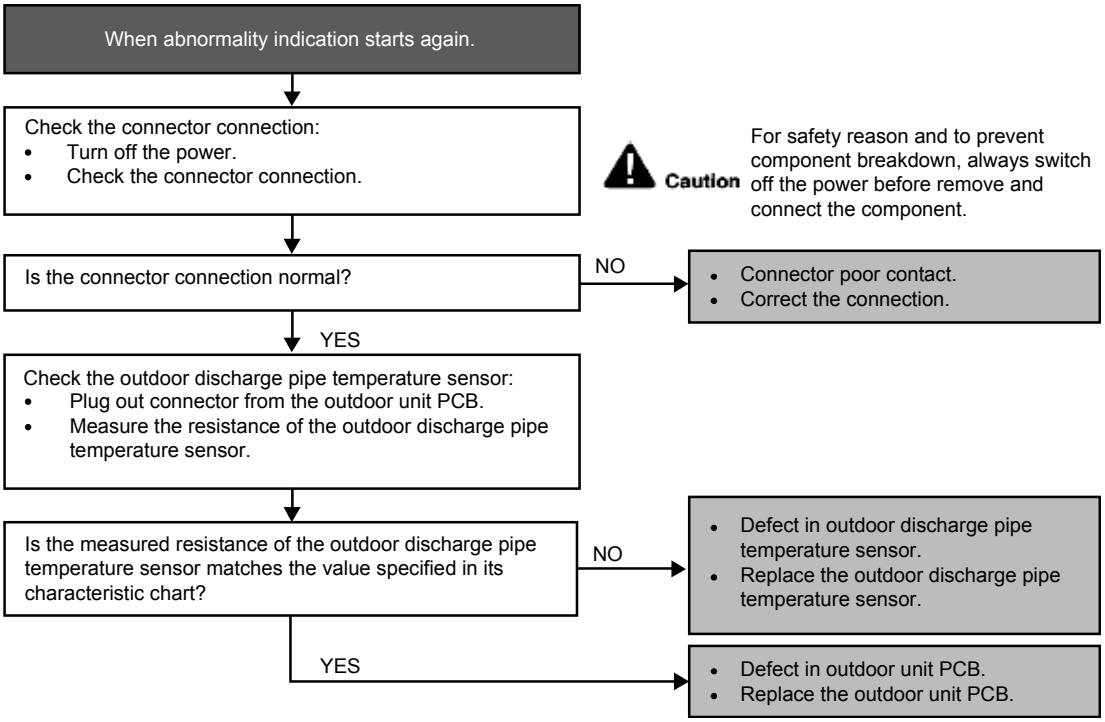

18.4.11 H32 (Outdoor Heat Exchanger Temperature Sensor 2 Abnormality)

Malfunction Decision Conditions

- During startup and operation of cooling and heating, the temperatures detected by the outdoor heat exchanger temperature sensor are used to determine sensor errors.

Malfunction Caused

- Faulty connector connection.
- Faulty sensor.
- Faulty PCB.

Troubleshooting

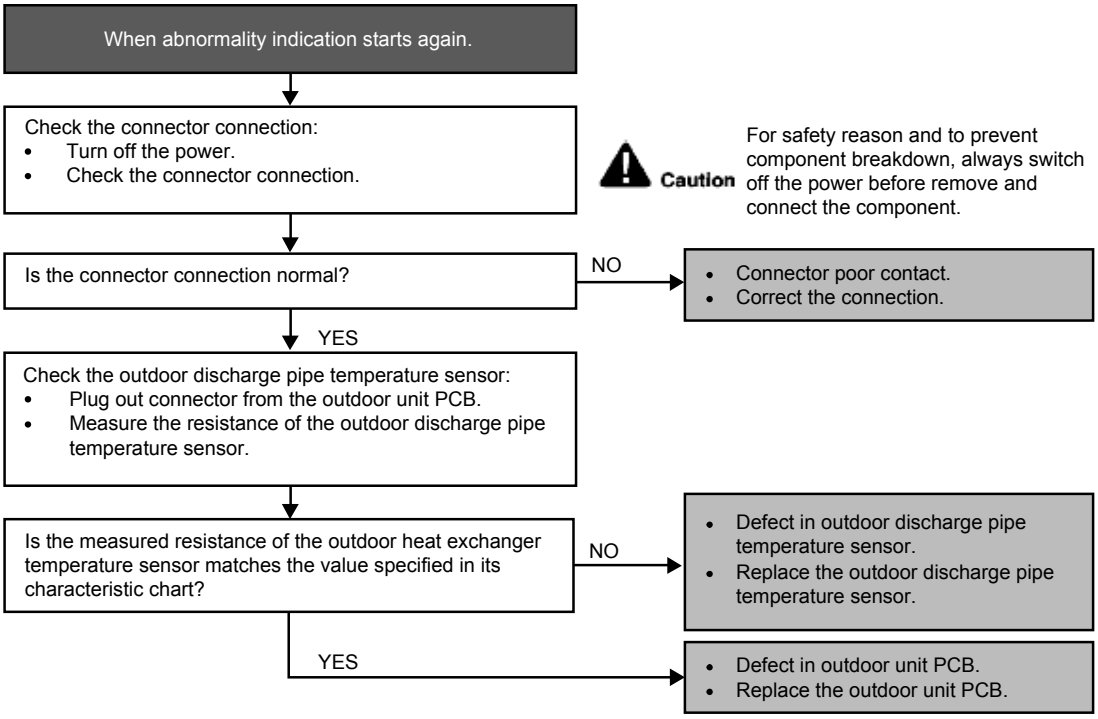

18.4.12 H33 (Unspecified Voltage between Indoor and Outdoor)

Malfunction Decision Conditions

- The supply power is detected for its requirement by the indoor/outdoor transmission.

Malfunction Caused

- Wrong models interconnected.
- Wrong indoor unit and outdoor unit PCBs used.
- Indoor unit or outdoor unit PCB defective.

Troubleshooting

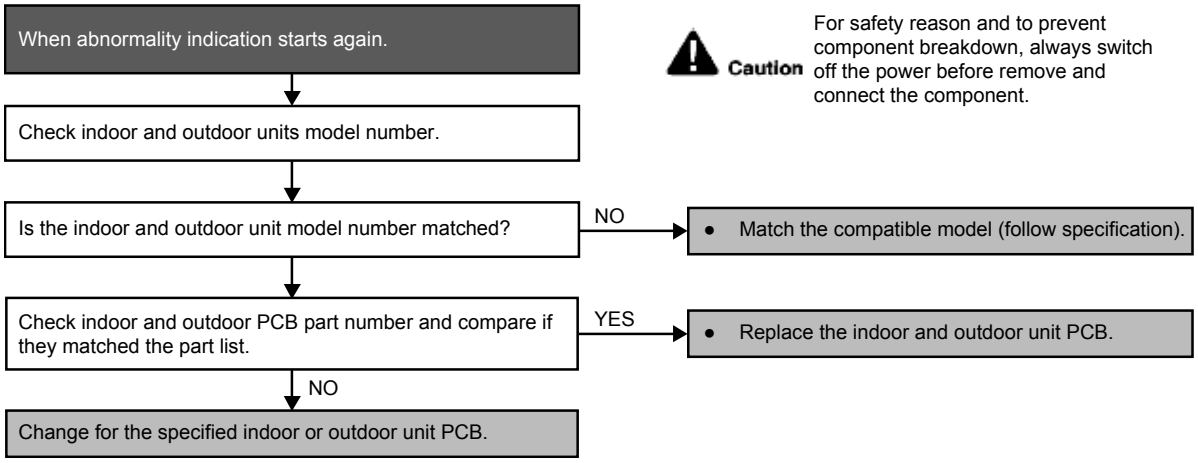

18.4.13 H36 (Outdoor Gas Pipe Sensor Abnormality)

Malfunction Decision Conditions

- During startup and operation of cooling and heating, the temperatures detected by the outdoor gas pipe temperature sensor are used to determine sensor errors.

Malfunction Caused

- Faulty connector connection.
- Faulty sensor.
- Faulty PCB.

Troubleshooting

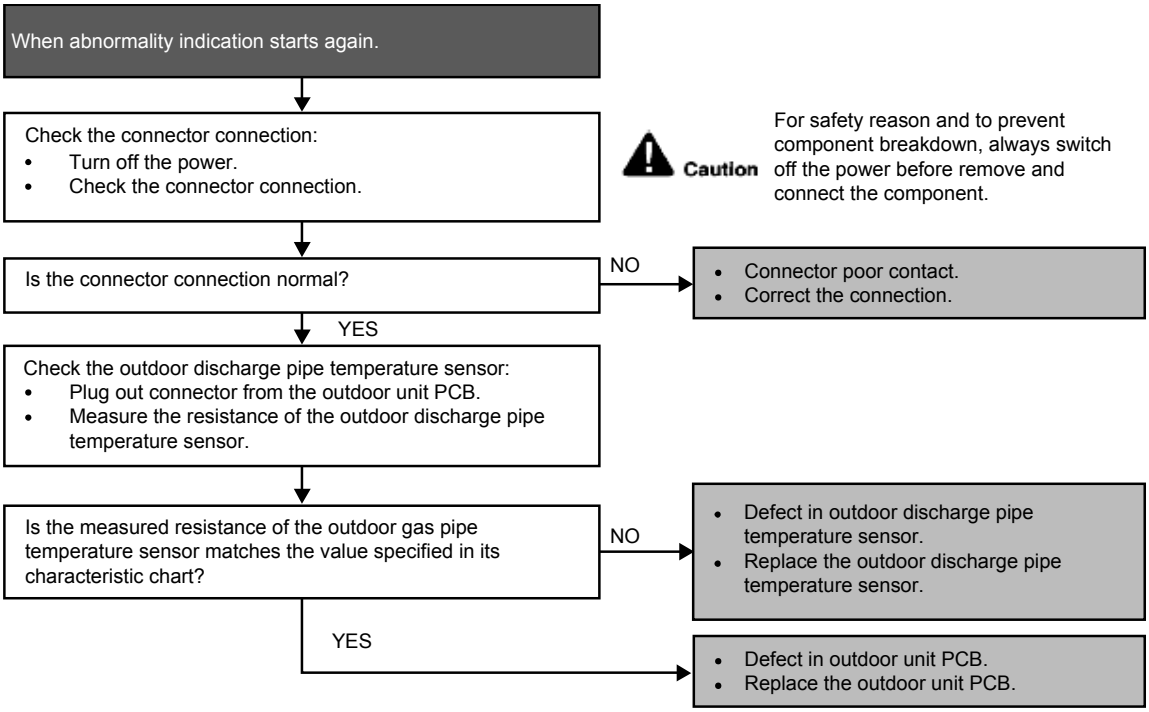

18.4.14 H37 (Outdoor Liquid Pipe Temperature Sensor Abnormality)

Malfunction Decision Conditions

- During startup and operation of cooling and heating, the temperatures detected by the outdoor liquid pipe temperature sensor are used to determine sensor errors.

Malfunction Caused

- Faulty connector connection.
- Faulty sensor.
- Faulty PCB.

Troubleshooting

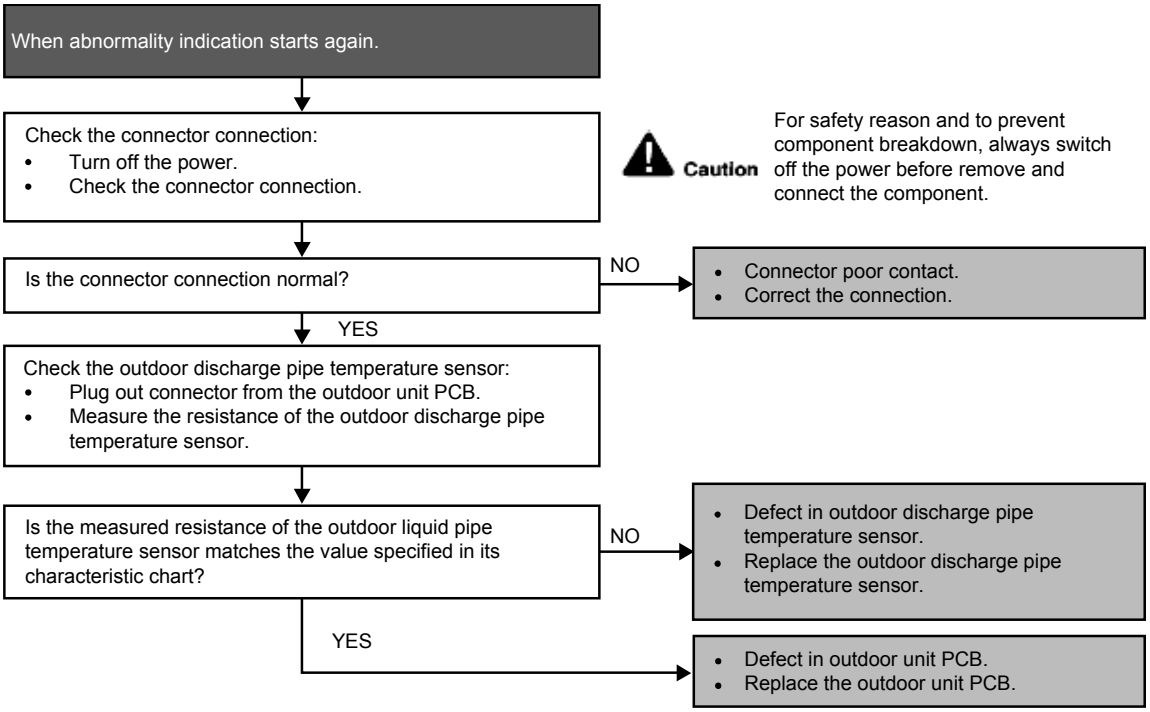

18.4.15 H59 (Human Activity Sensor Abnormality)

Malfunction Decision Conditions

- Feedback signal of human activity sensor.

Malfunction Caused

- Feedback signal is fixed at 0 VDC or 5 VDC continuously for 25 seconds during ECONAVI or AUTO COMFORT operation.
- Feedback signal is detected during ECONAVI or AUTO COMFORT off.

Troubleshooting

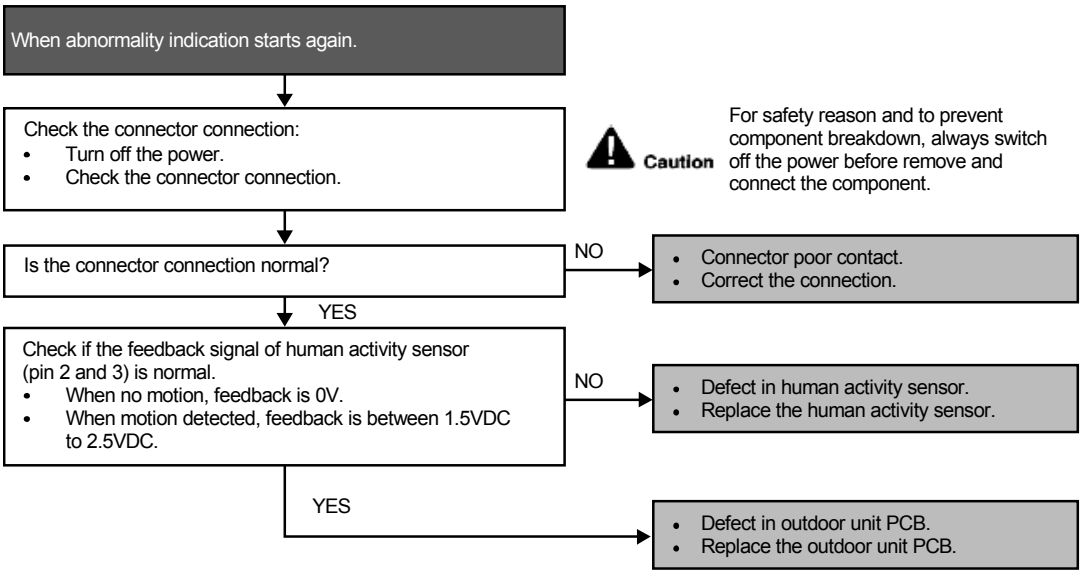

18.4.16 H70 (Light Sensor Abnormality)

Malfunction Decision Conditions

- Feedback signal of light sensor.

Malfunction Caused

- Feedback value is 0 VDC continuously.

Troubleshooting

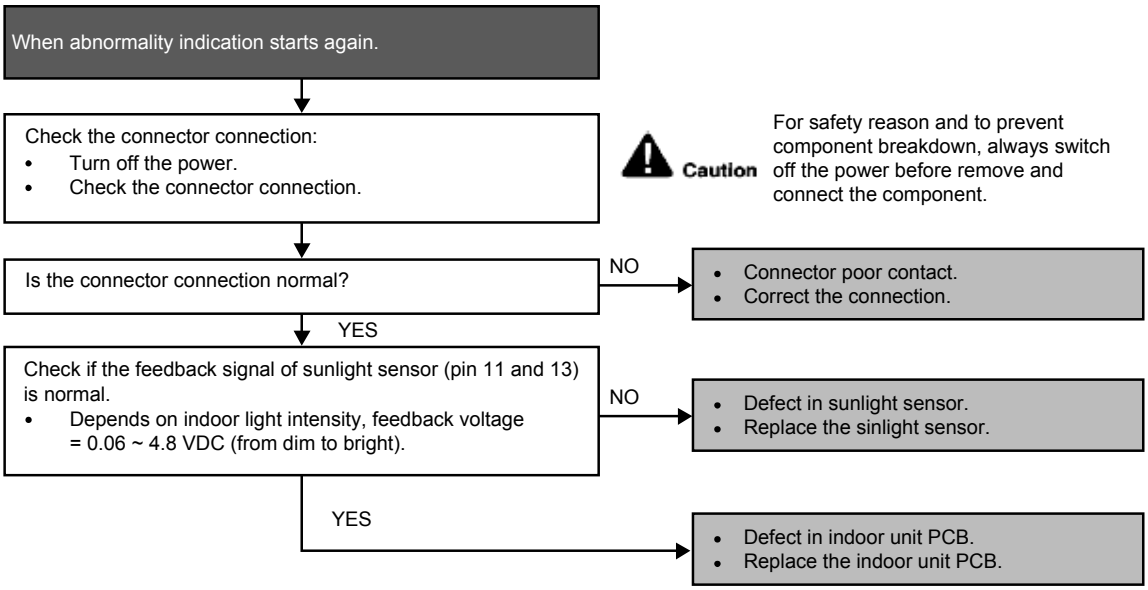

18.4.17 H97 (Outdoor Fan Motor – DC Motor Mechanism Locked)

Malfunction Decision Conditions

- The rotation speed detected by the Hall IC during fan motor operation is used to determine abnormal fan motor.

Malfunction Caused

- Operation stops due to short circuit inside the fan motor winding.
- Operation stops due to breaking of wire inside the fan motor.
- Operation stops due to breaking of fan motor lead wires.
- Operation stops due to Hall IC malfunction.
- Operation error due to faulty outdoor unit PCB.

Troubleshooting

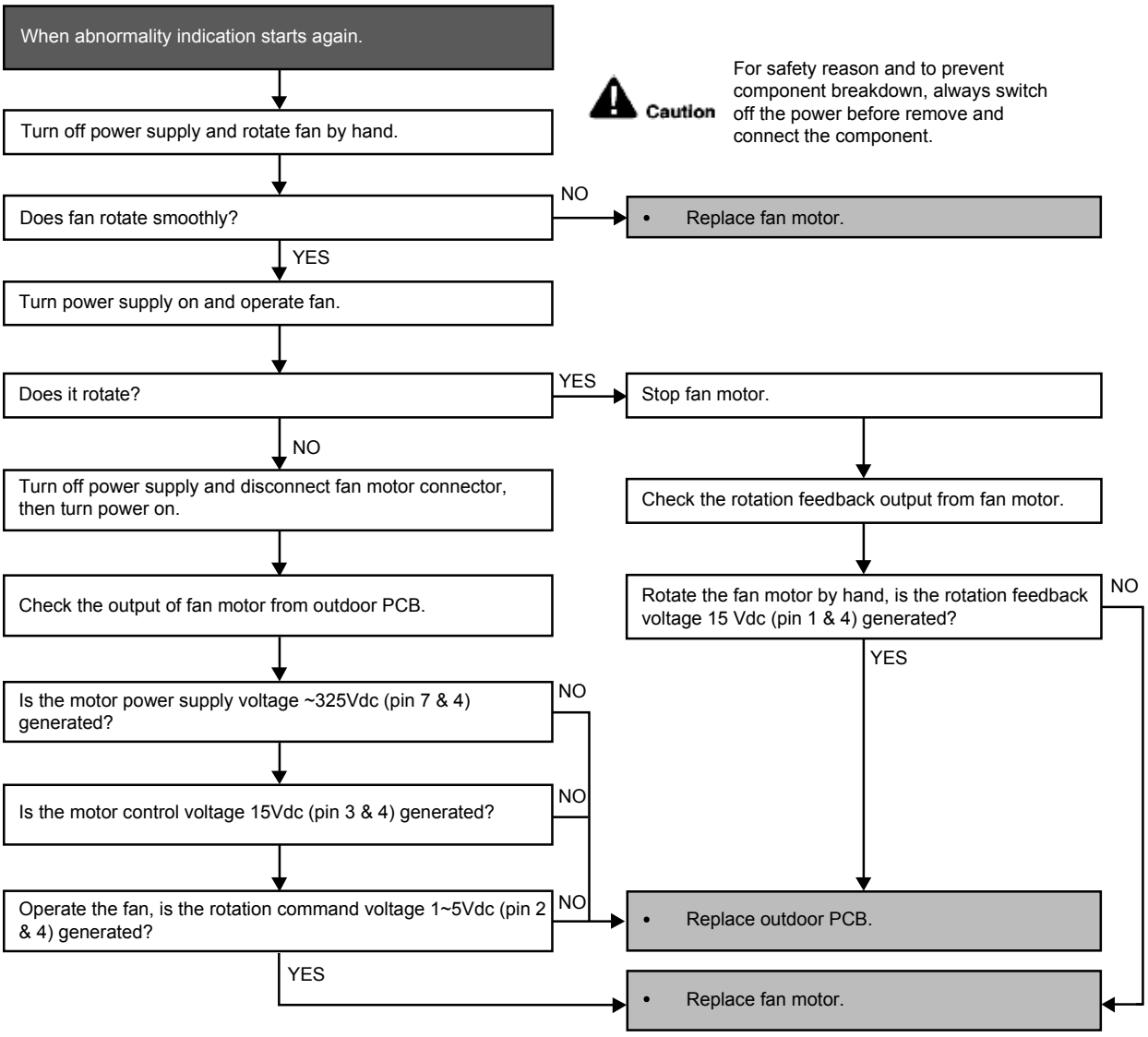

18.4.18 H98 (Error Code Stored in Memory and no alarm is triggered / no TIMER LED flashing)

Malfunction Decision Conditions

- Indoor high pressure is detected when indoor heat exchanger is detecting very high temperature when the unit is operating in heating operation.
- Phenomena: unit is stopping and re-starting very often in heating mode.

Malfunction Caused

- Indoor heat exchanger thermistor.
- Clogged air filter or heat exchanger.
- Over-bent pipe (liquid side).

Troubleshooting

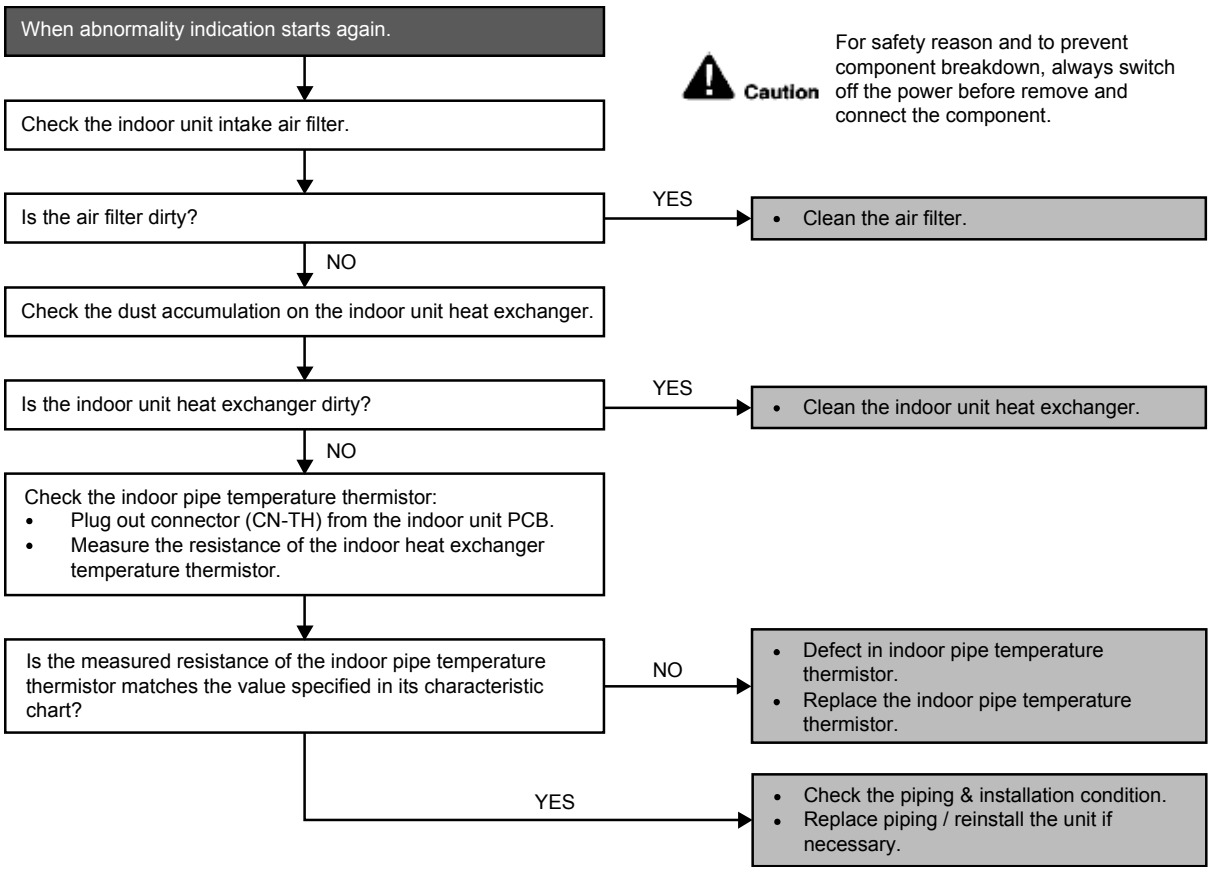

18.4.19 H99 (Indoor Freeze Prevention Protection: Cooling or Soft Dry)

Error Code will not display (no Timer LED blinking) but store in EEPROM

Malfunction Decision Conditions

- Freeze prevention control takes place (when indoor pipe temperature is lower than 2°C).

Malfunction Caused

- Air short circuit at indoor unit.
- Clogged indoor unit air filter.
- Dust accumulation on the indoor unit heat exchanger.
- 2/3 way valve closed.
- Faulty indoor unit fan motor.
- Refrigerant shortage (refrigerant leakage).
- Clogged expansion valve or strainer.
- Faulty indoor pipe temperature sensor.
- Faulty indoor unit PCB.

Troubleshooting

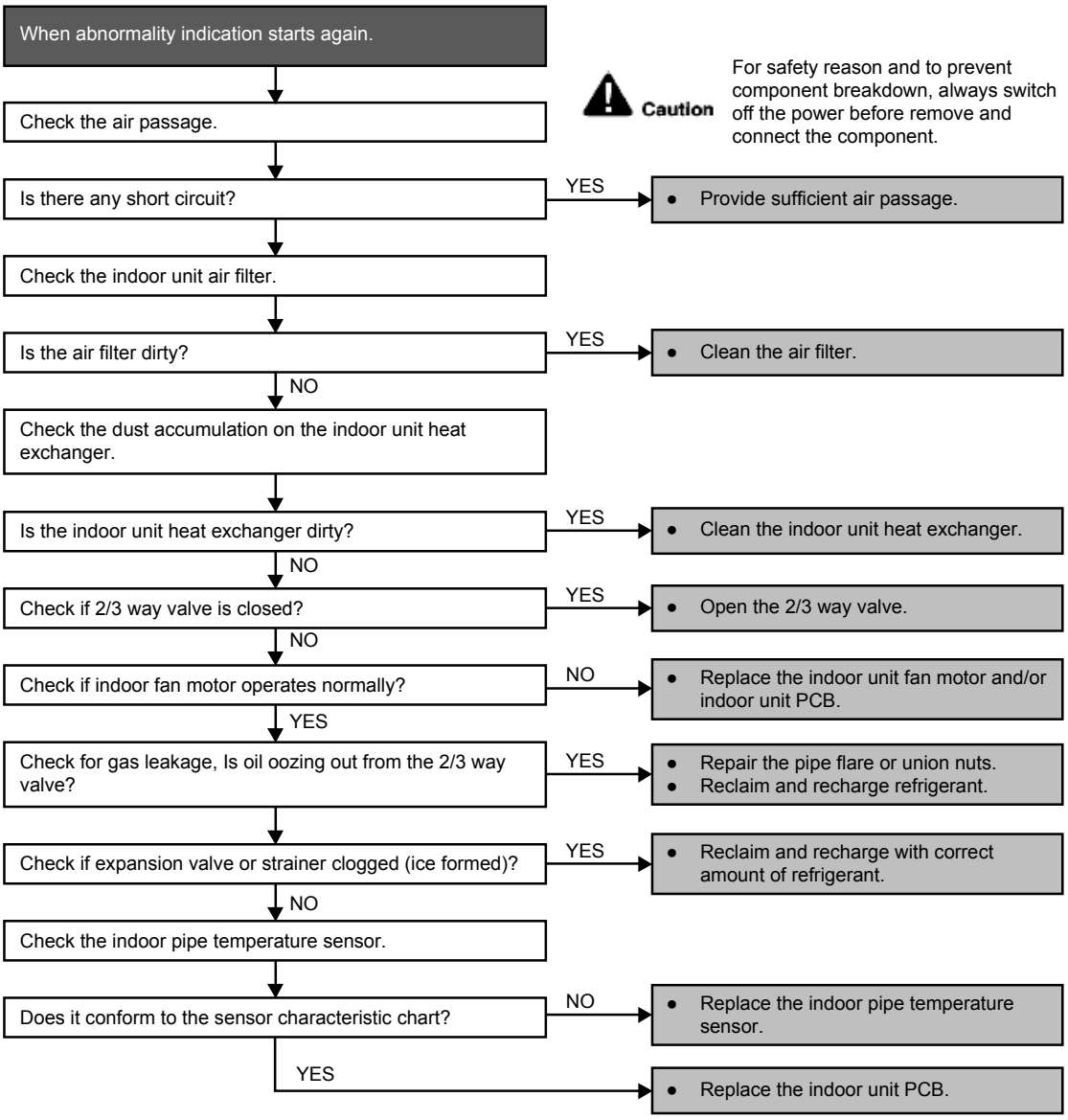

18.4.20 F11 (4-way Valve Switching Failure)

Malfunction Decision Conditions

- When indoor heat exchanger is cold during heating (except deice) or when indoor heat exchanger is hot during cooling and compressor operating, the 4-way valve is detected as malfunction.

Malfunction Caused

- Indoor heat exchanger (pipe) thermistor
- 4-way valve malfunction

Troubleshooting

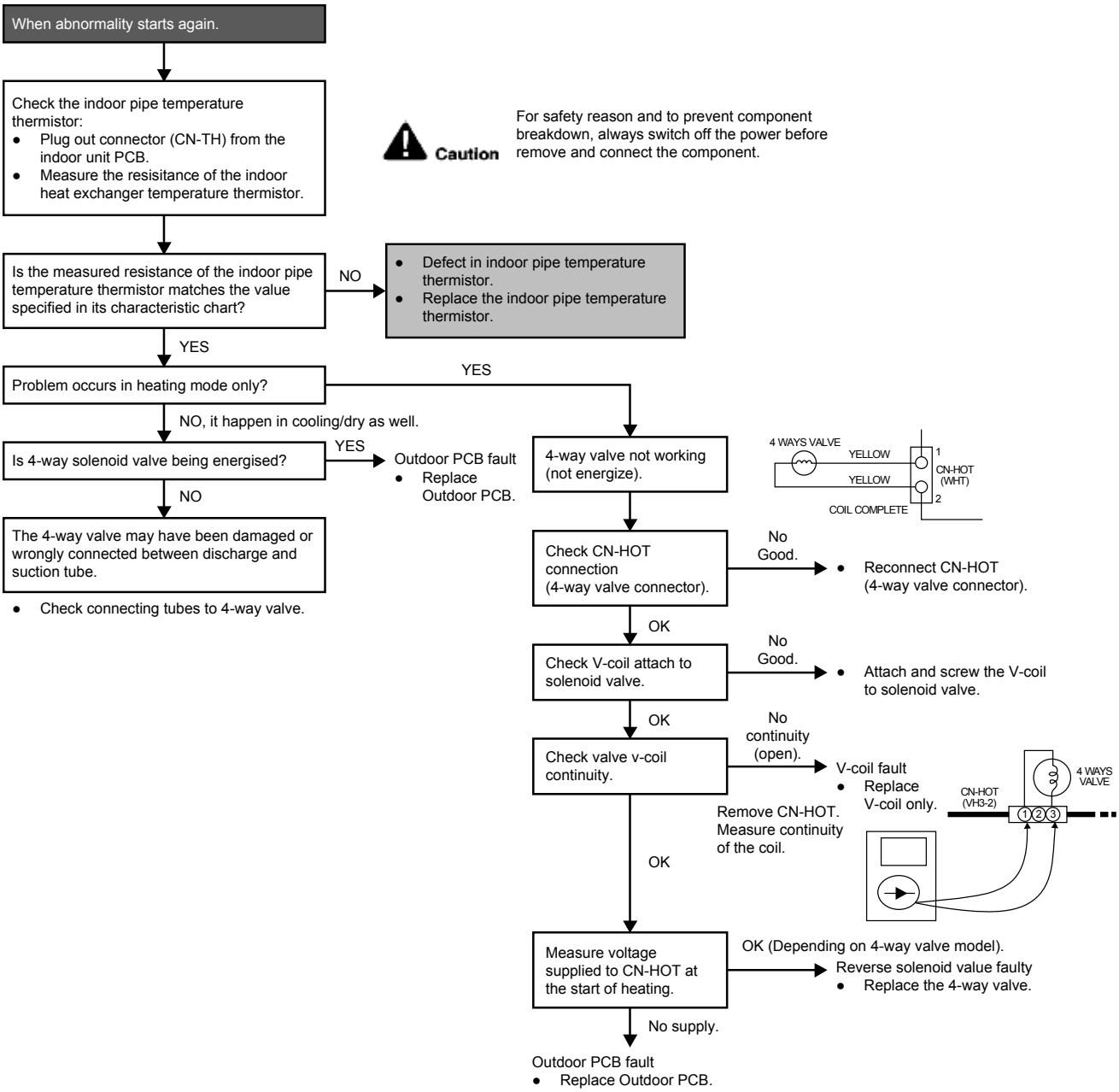

* Check gas side pipe – for hot gas flow in cooling mode

18.4.21 F17 (Indoor Standby Units Freezing Abnormality)

Malfunction Decision Conditions

- When the different between indoor intake air temperature and indoor pipe temperature is above 50°F or indoor pipe temperature is below 30.2°F

  Remark:
  When the indoor standby unit is freezing, the outdoor unit transfers F17 error code to the corresponding indoor unit and H39 to other indoor unit(s).

Malfunction Caused

- Wrong wiring connection
- Faulty sensor
- Faulty expansion valve

Troubleshooting

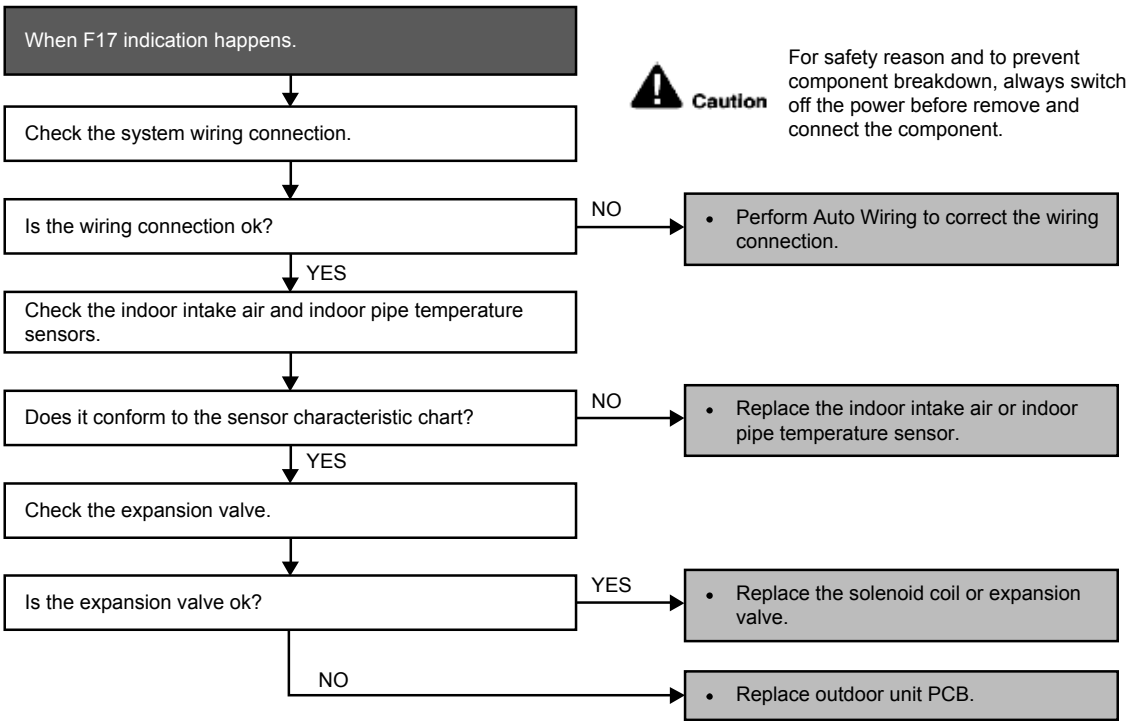

18.4.22 F90 (Power Factor Correction Protection)

Malfunction Decision Conditions

- To maintain DC voltage level supply to power transistor.
- To detect high DC voltage level after rectification.

Malfunction Caused

- During startup and operation of cooling and heating, when Power Factor Correction (PFC) protection circuitry at the outdoor unit main PCB senses abnormal DC voltage level for power transistors.
- When DC voltage detected is LOW, transistor switching will turn ON by controller to push-up the DC level.
- When DC voltage detected is HIGH (391Vdc – 425Vdc), active LOW signal will send by the controller to turn OFF relay RY-C.

Troubleshooting

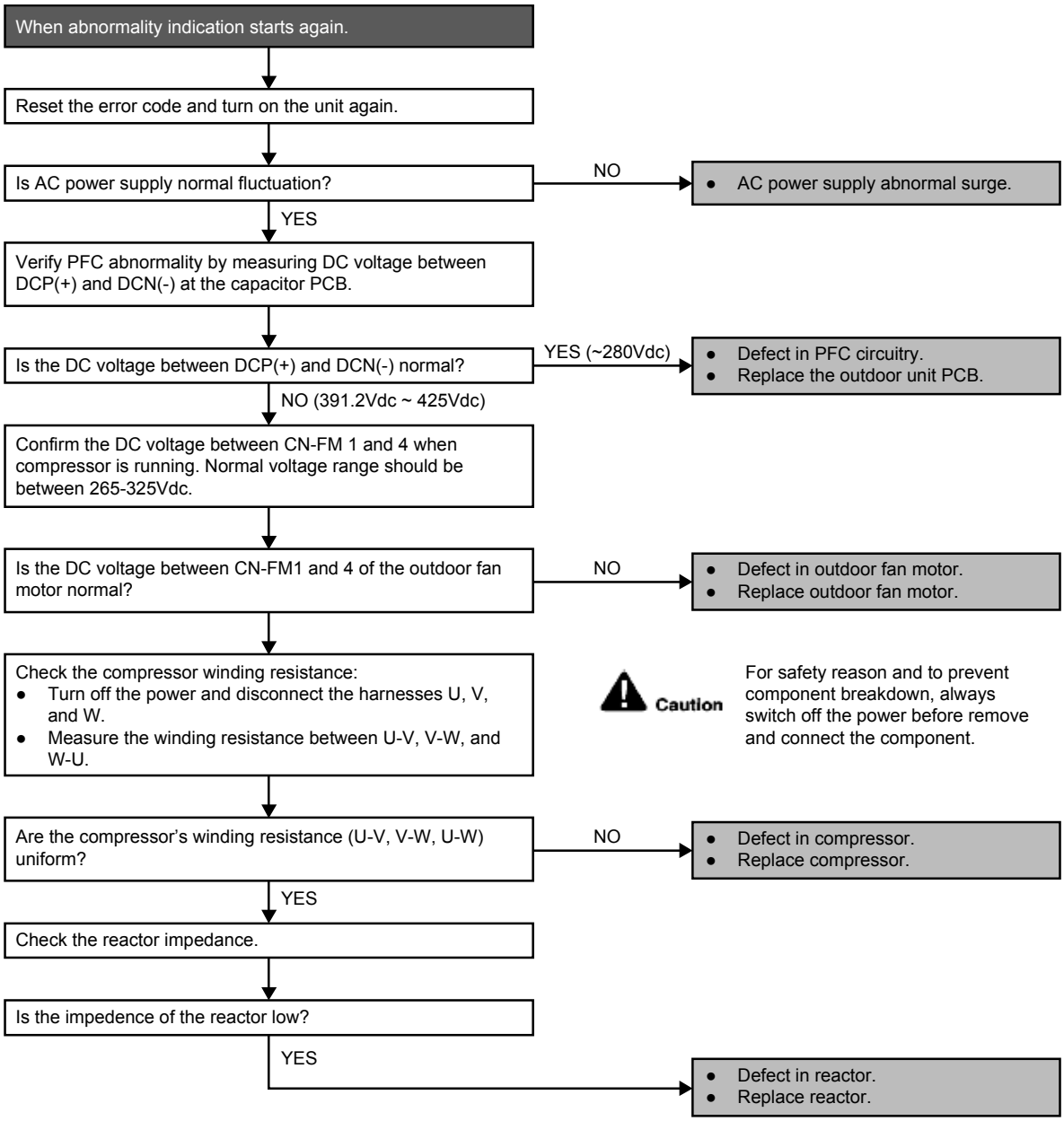

18.4.23 F91 (Refrigeration Cycle Abnormality)

Malfunction Decision Conditions

- The input current is low while the compressor is running at higher than the setting frequency.

Malfunction Caused

- Lack of gas.
- 3-way valve close.

Troubleshooting

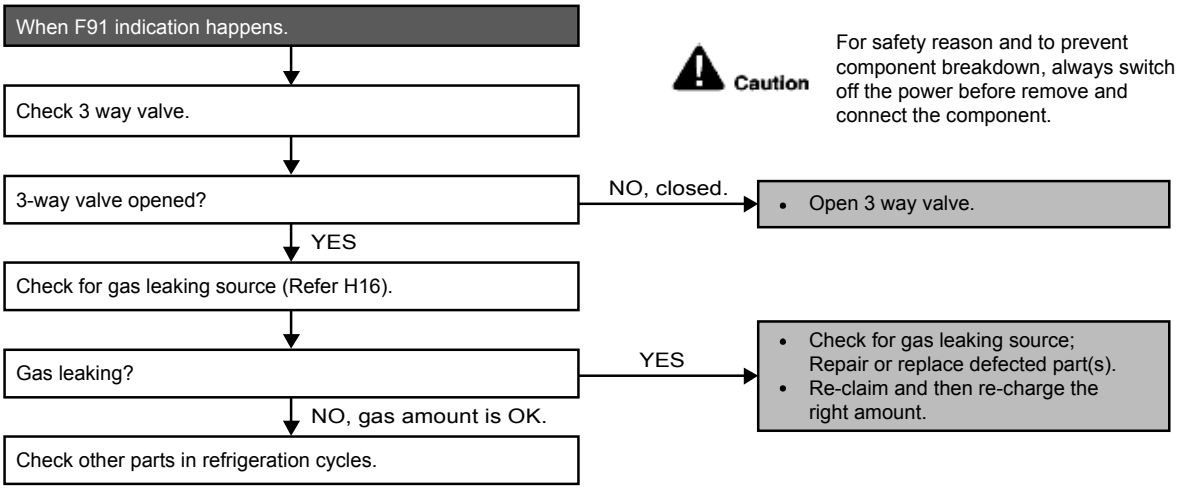

18.4.24 F93 (Compressor Rotation Failure)

Malfunction Decision Conditions

- A compressor rotation failure is detected by checking the compressor running condition through the position detection circuit.

Malfunction Caused

- Compressor terminal disconnect.
- Faulty Outdoor PCB.
- Faulty compressor.

Troubleshooting

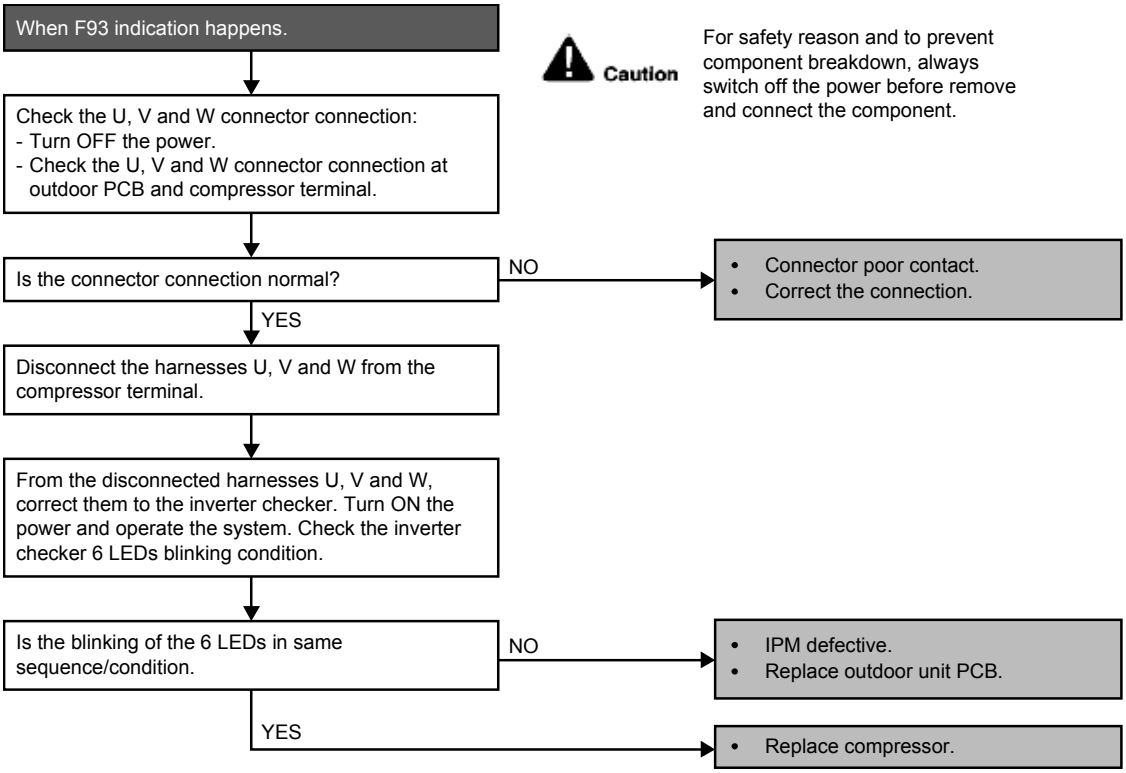

18.4.25 F95 (Outdoor High Pressure Protection: Cooling or Soft Dry)

Malfunction Decision Conditions

- During operation of cooling or soft dry, when outdoor unit heat exchanger high temperature data is detected by the outdoor unit heat exchanger thermistor.

Malfunction Caused

- Outdoor heat exchanger temperature rise due to short-circuit of hot discharge air flow.
- Outdoor heat exchanger temperature rise due to defective of outdoor fan motor.
- Outdoor heat exchanger temperature rise due to defective outdoor heat exchanger thermistor.
- Outdoor heat exchanger temperature rise due to defective of outdoor unit PCB.

Troubleshooting

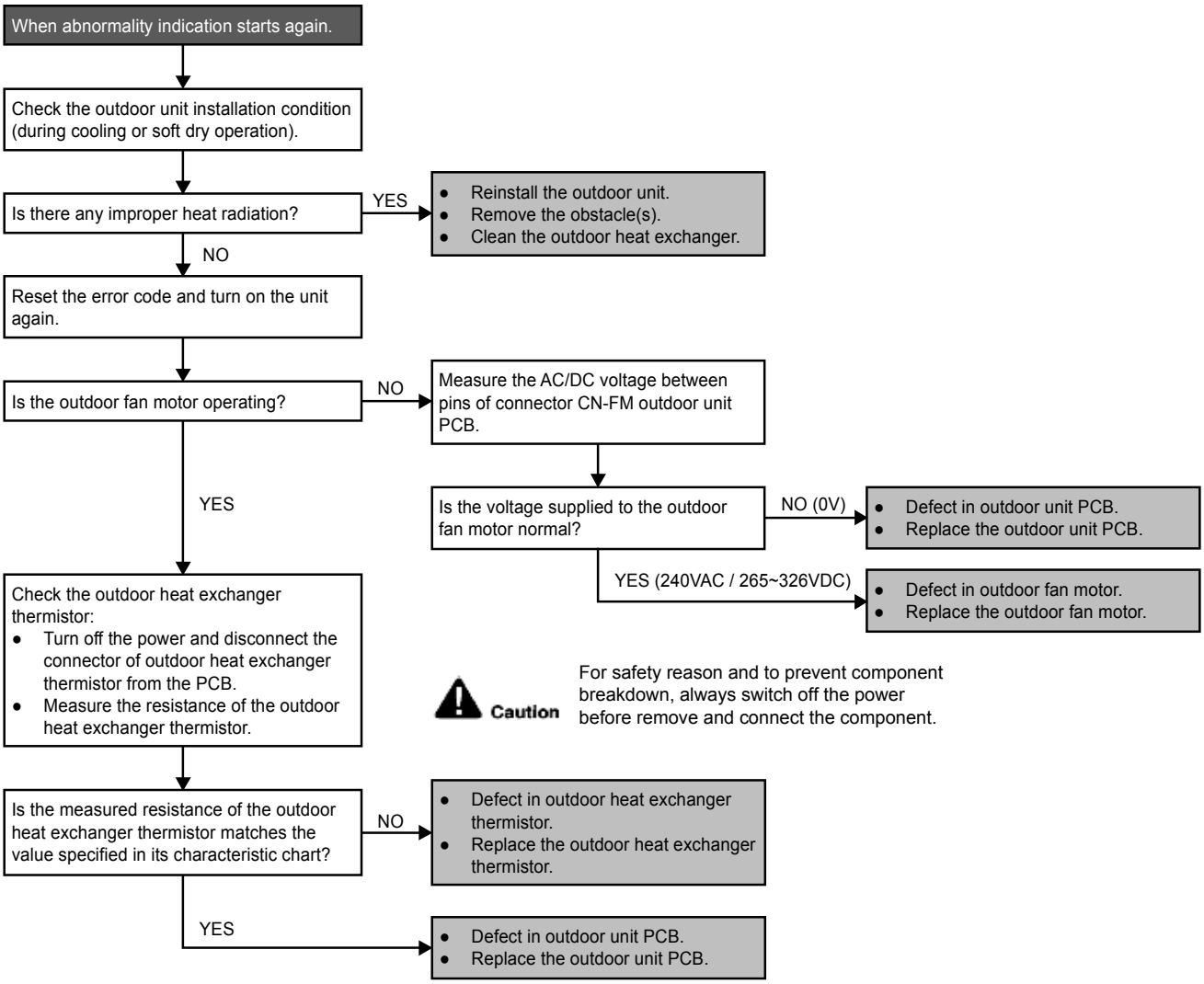

18.4.26 F96 (IPM Overheating)

Malfunction Decision Conditions

- During operating of cooling and heating, when IPM temperature data (212°F) is detected by the IPM temperature sensor.
  Multi Models only
  - Compressor Overheating: During operation of cooling and heating, when the compressor OL is activated.
  - Heat Sink Overheating: During operation of cooling and heating, when heat sink temperature data (194°F) is detected by the heat sink temperature sensor.

Malfunction Caused

- IPM overheats due to short circuit of hot discharge air flow.
- IPM overheats due to defective of outdoor fan motor.
- IPM overheats due to defective of internal circuitry of IPM.
- IPM overheats due to defective IPM temperature sensor.
  Multi Models Only
  - Compressor OL connector poor contact.
  - Compressor OL faulty.

Troubleshooting

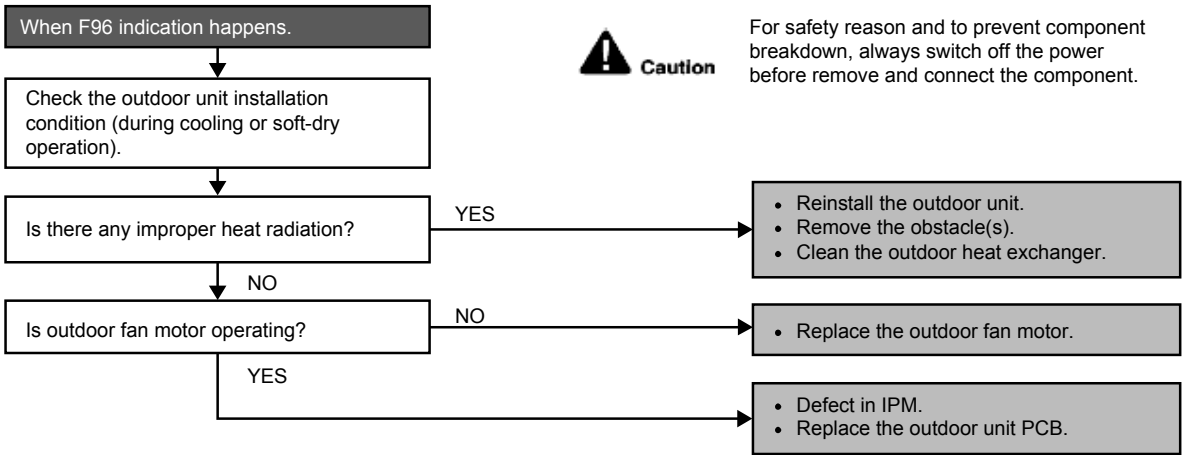

18.4.27 F97 (Compress or Overheating)

Malfunction Decision Conditions

- During operation of cooling and heating, when compressor tank temperature data (233.6°F) is detected by the compressor tank temperature sensor.

Malfunction Caused

- Faulty compressor tank temperature sensor
- 2/3 way valve closed
- Refrigerant shortage (refrigerant leakage)
- Faulty outdoor unit PCB
- Faulty compressor

Troubleshooting

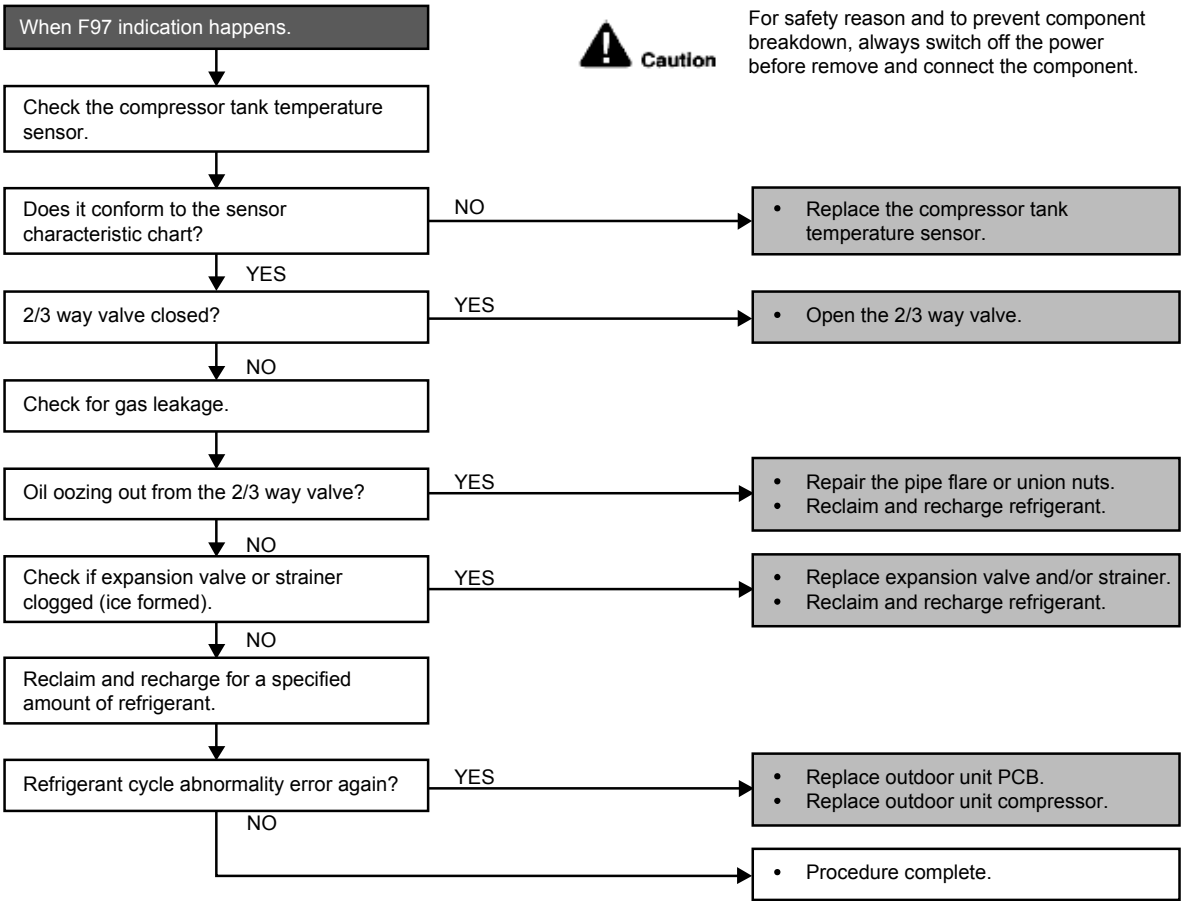

18.4.28 F98 (Input Over Current Detection)

Malfunction Decision Conditions

- During operation of cooling and heating, when an input over-current (X value in Total Running Current Control) is detected by checking the input current value being detected by current transformer (CT) with the compressor running.

Malfunction Caused

- Excessive refrigerant.
- Faulty outdoor unit PCB.

Troubleshooting

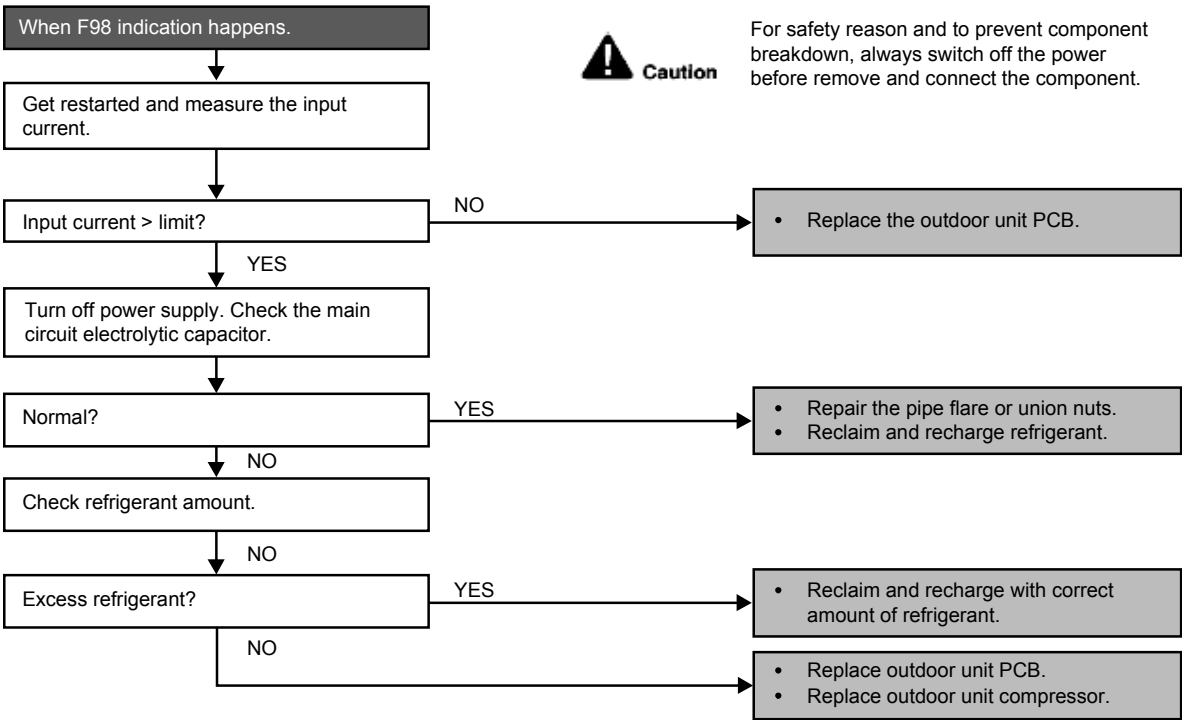

18.4.29 F99 (DC Peak Detection)

Malfunction Decision Conditions

During startup and operation of cooling and heating, when inverter DC peak data is received by the outdoor internal DC Peak sensing circuitry.

Malfunction Caused

- DC current peak due to compressor failure.
- DC current peak due to defective power transistor(s).
- DC current peak due to defective outdoor unit PCB.
- DC current peak due to short circuit.

Troubleshooting

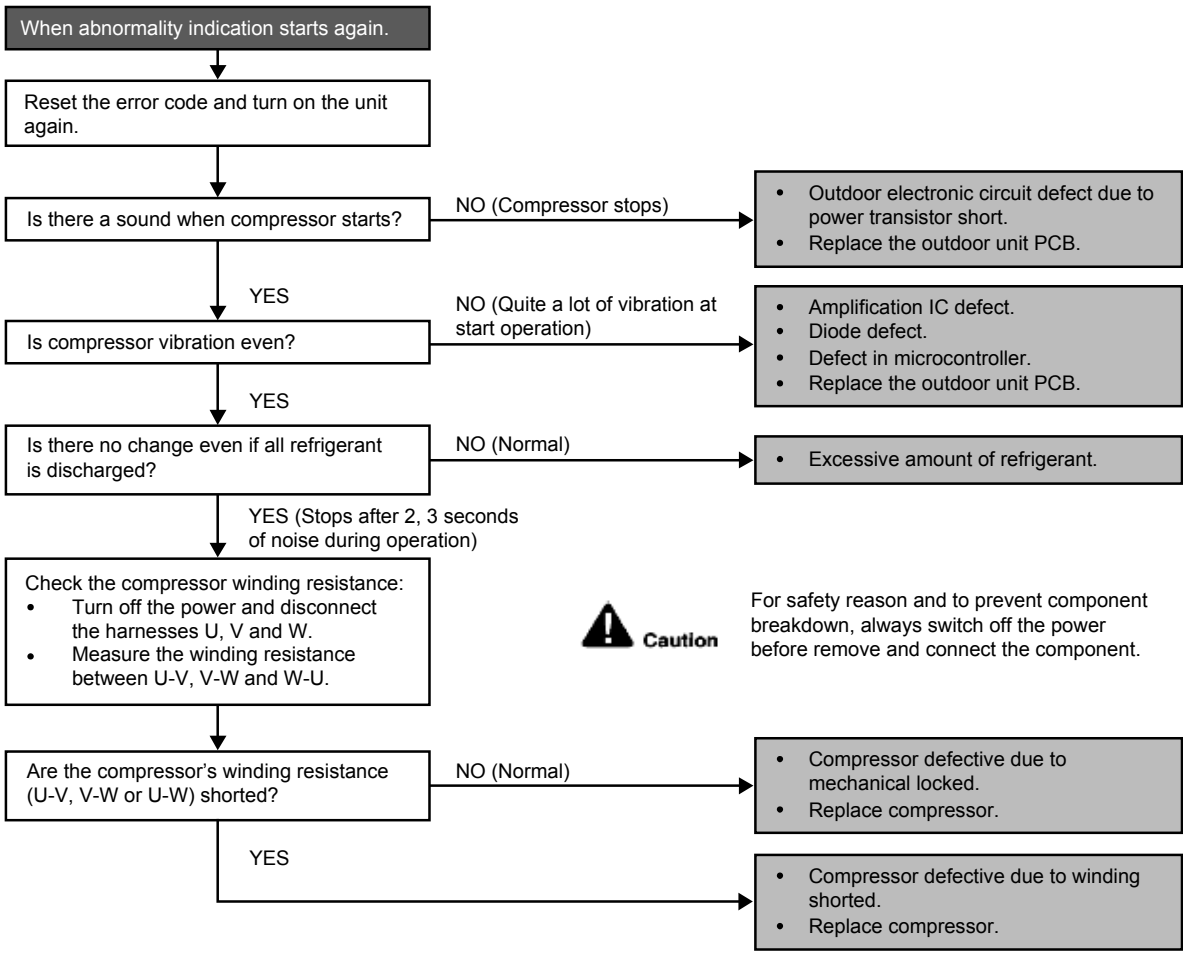

19. Disassembly and Assembly Instructions

WARNING

High Voltage is generated in the electrical parts area by the capacitor. Ensure that the capacitor has discharged sufficiently before proceeding with repair work. Failure to heed this caution may result in electric shocks.

19.1 CS-E9RKUAW CS-E12RKUAW

19.1.1 Indoor Electronic Controllers, Cross Flow Fan and Indoor Fan Motor Removal Procedures

19.1.1.1 To remove front grille

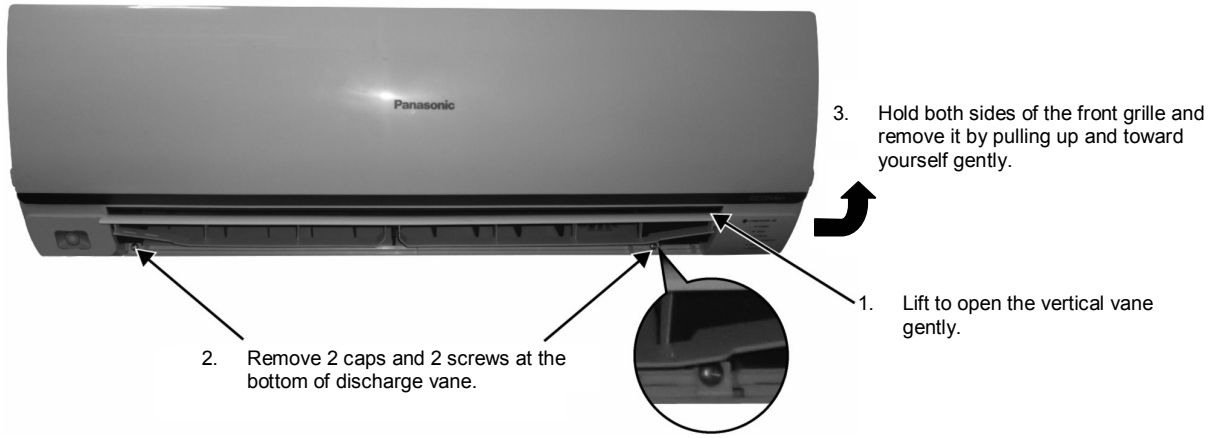

Figure 1

19.1.1.2 To remove power electronic controller

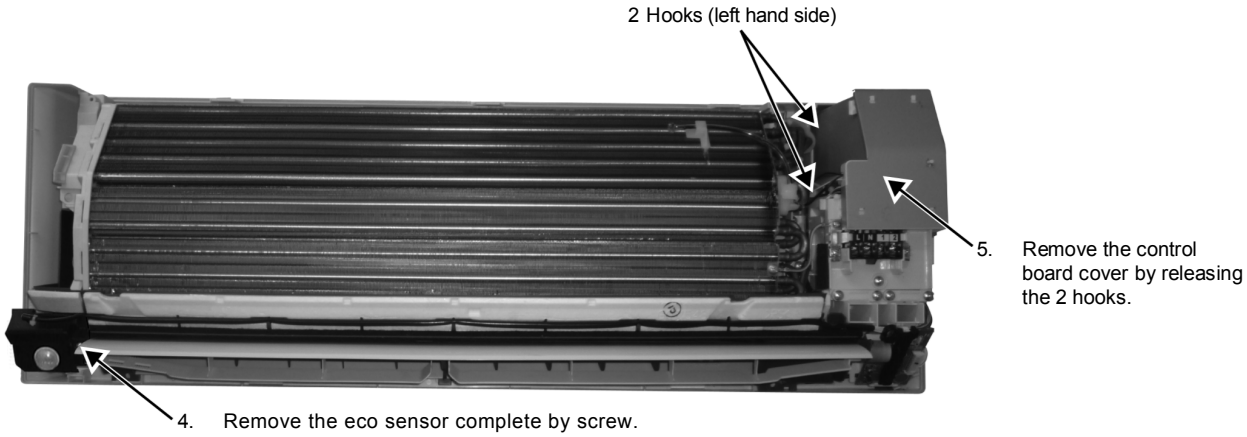

Figure 2

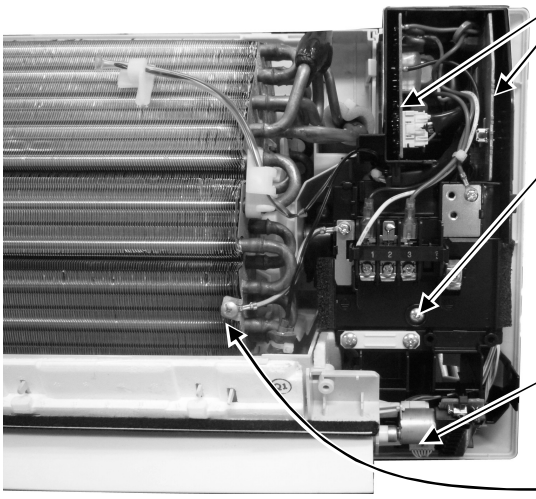

9. Pull out the main electronic controller and power electronic controller halfway.

8. Remove screw to remove terminal board complete.

7. Detach the CN-DISP connector then remove the indicator complete.

6. Detach the Earth wire

10. Detach 3 or 4 connectors as labeled from the electronic controller. Then pull out main controller gently

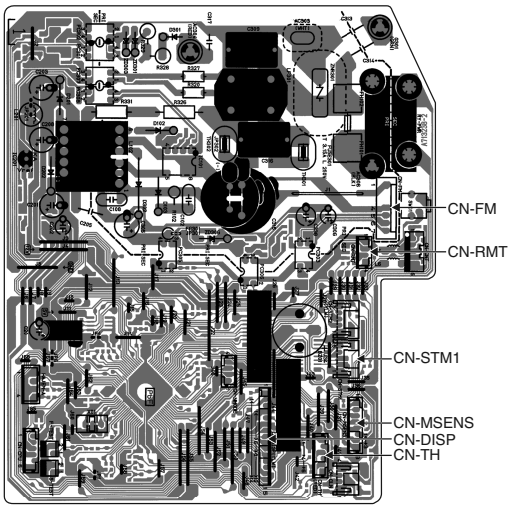

Figure 3

Figure 4

19.1.1.3 To remove discharge grille

11. Pull out to remove the drain hose from the discharge grille

12. Then pull the discharge grille downward gently to dismantle it

Figure 5

19.1.1.4 To remove control board

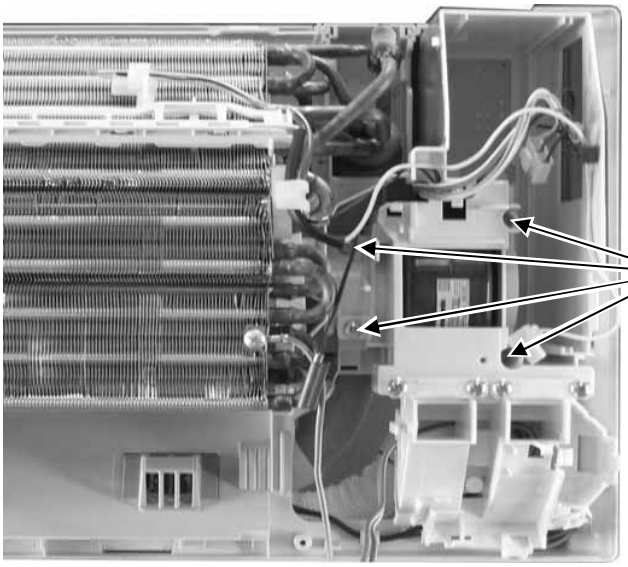

13. Remove 4 screws holding the control board then pull out the control board.

Figure 6

19.1.1.5 To remove cross flow fan and indoor fan motor

14. Remove the screw that holding the cross flow fan and fan motor axis.

Figure 7

16. Remove the bearing by pulling it out gently

15. Remove the screw from the evaporator.

Figure 8

17. Push the holdfast to the left and lift up the evaporator.

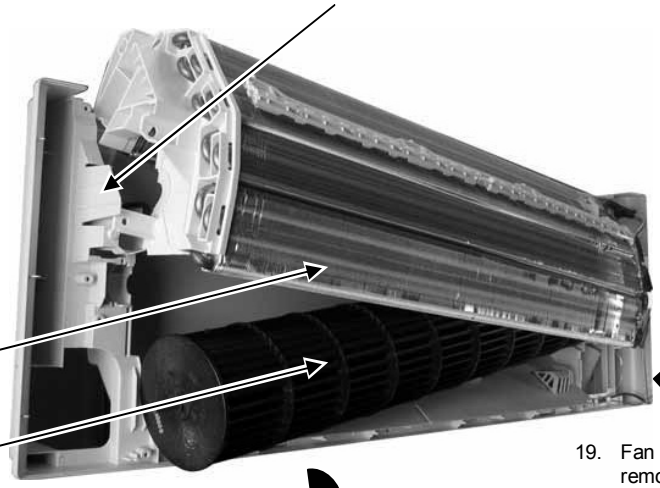

Evaporator

Cross flow fan

18. Remove the cross flow fan from the unit by pulling it to the left and downward.

19. Fan motor can be removed after the removal of cross flow fan.

Reminder: To reinstall the fan motor, adjust the fan motor connector to 45° towards you before fixing control board.

Figure 9

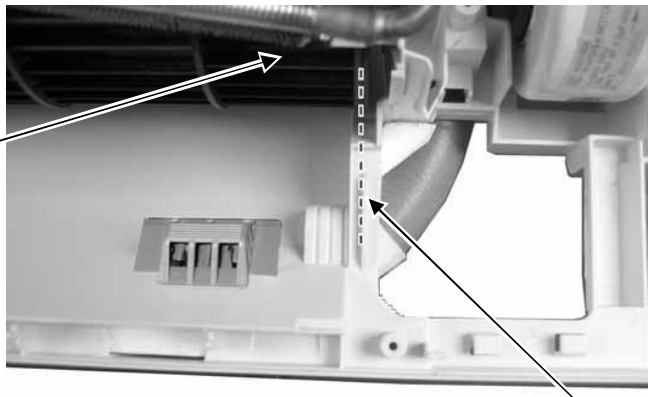
Cross Flow Fan
Reminder: To reinstall the cross flow fan, ensure cross flow fan is in line as shown in figure 10

Figure 10

WARNING

High Voltage is generated in the electrical parts area by the capacitor. Ensure that the capacitor has discharged sufficiently before proceeding with repair work. Failure to heed this caution may result in electric shocks.

19.2 CS-E18RKUAW CS-E24RKUAW

19.2.1 Indoor Electronic Controllers, Cross Flow Fan and Indoor Fan Motor Removal Procedures

19.2.1.1 To remove front grille

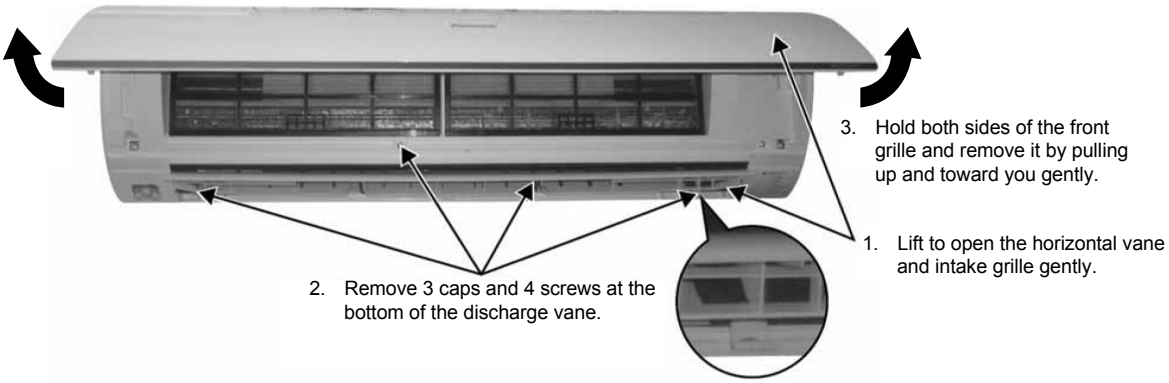

Figure 1

19.2.1.2 To remove power electronic controller

Figure 2

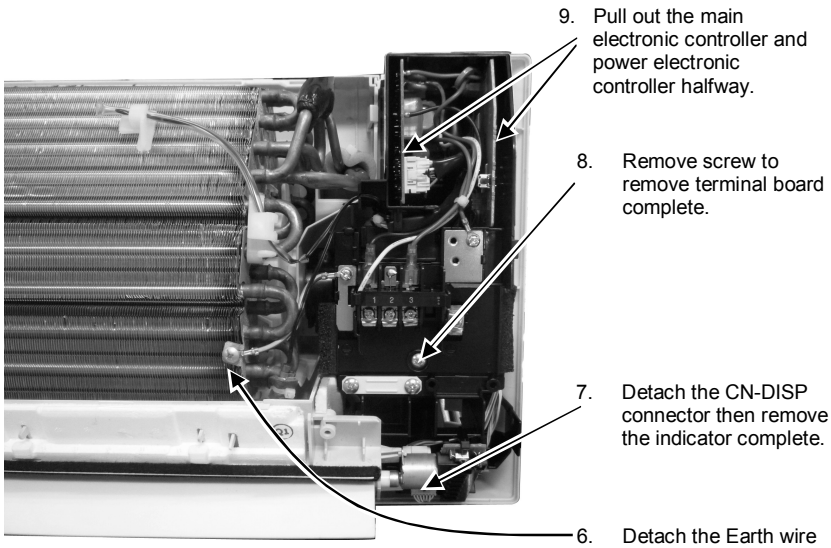

Figure 3

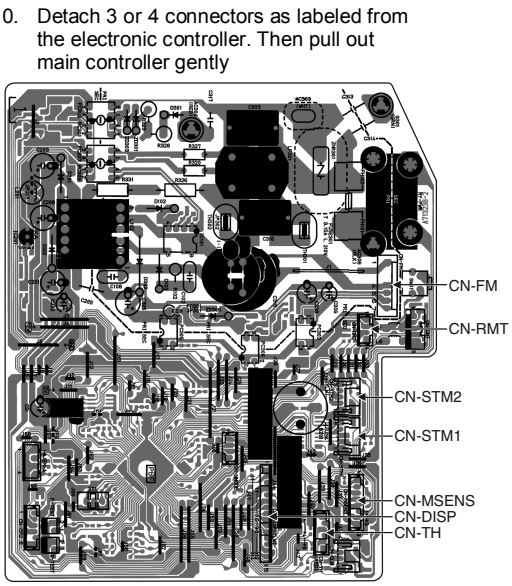

Figure 4

19.2.1.3 To remove discharge grille

11. Pull out to remove the drain hose from the discharge grille.

12. Then pull the discharge grille downward gently to dismantle it.

Figure 5

19.2.1.4 To remove control board

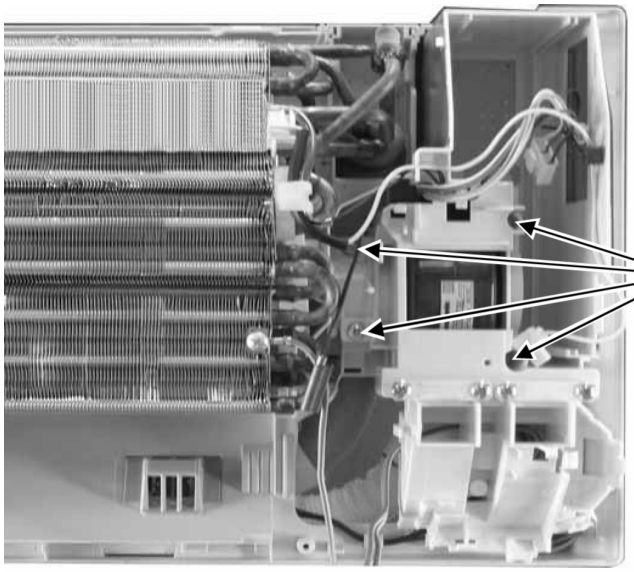

13. Remove 4 screws holding the control board then pull out the control board.

Figure 6

19.2.1.5 To remove cross flow fan and indoor fan motor

14. Remove the screw that holding the cross flow fan and fan motor axis.

Figure 7

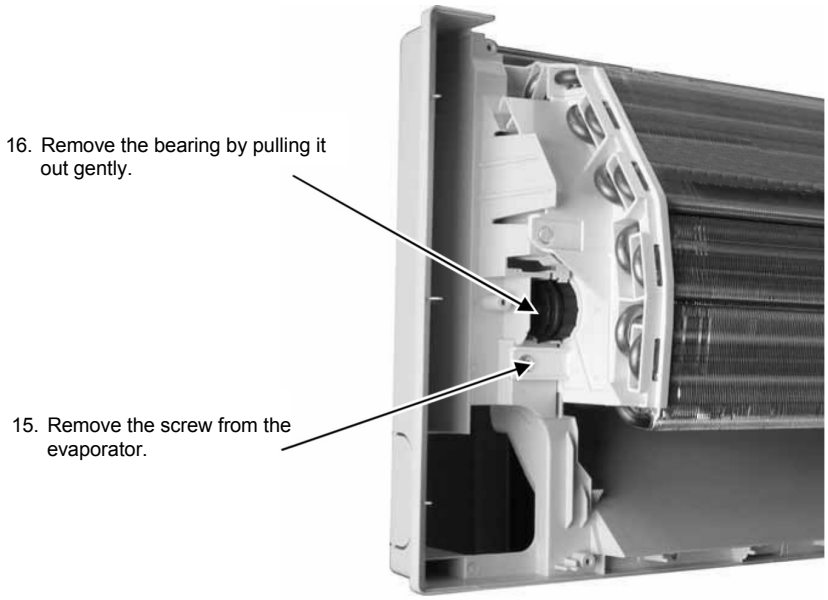

Figure 8

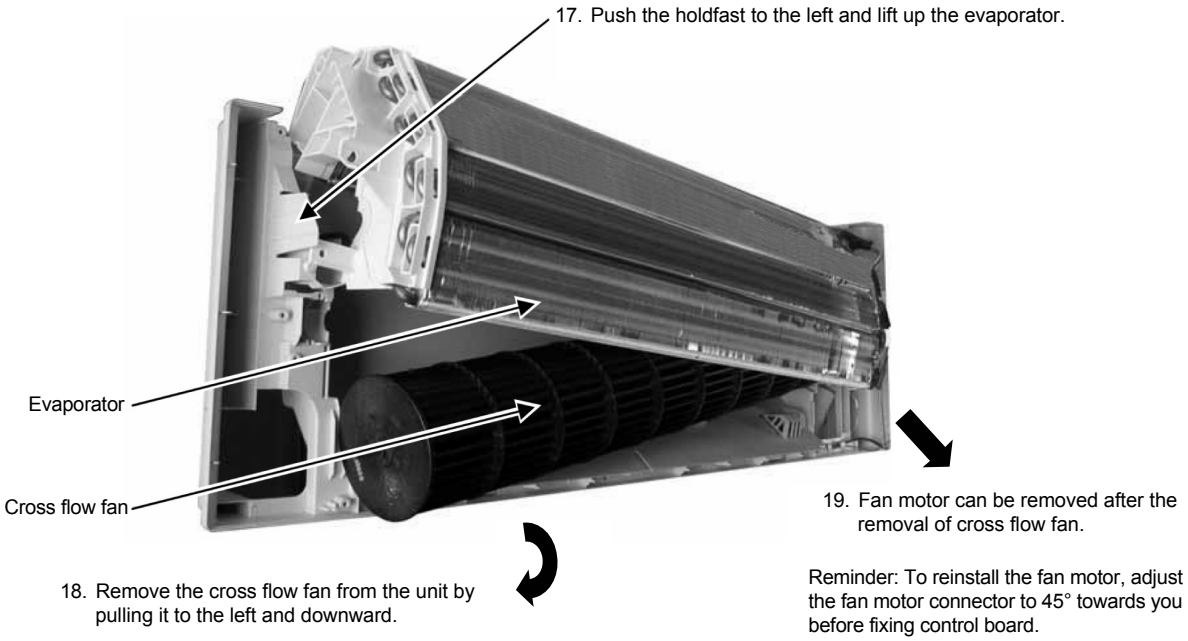

Figure 9

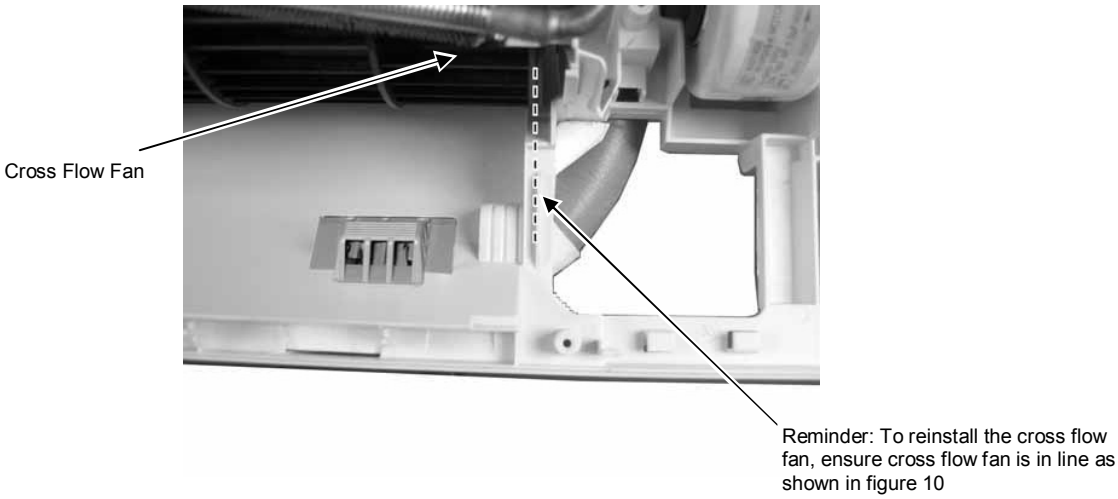

Figure 10

19.3 Outdoor Electronic Controller Removal Procedure

19.3.1 CU-E9RKUA CU-E12RKUA

⚠ **Caution! When handling electronic controller, be careful of electrostatic discharge.**

1 Remove the 3 screws of the Top Panel.

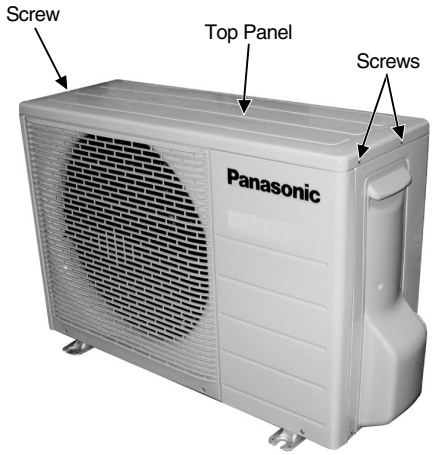

Fig. 1

2 Remove the 6 screws of the Front Panel.

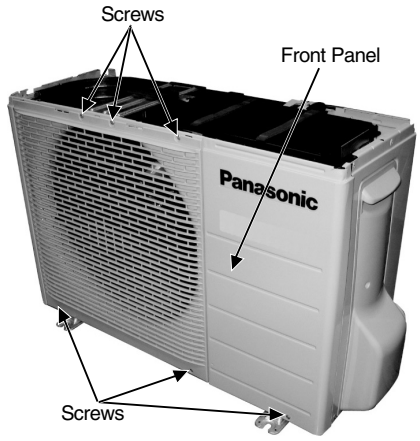

Fig. 2

3 Remove the screw of the Terminal Board Cover.

4 Remove the Top Cover of the Control Board by 4 hooks.

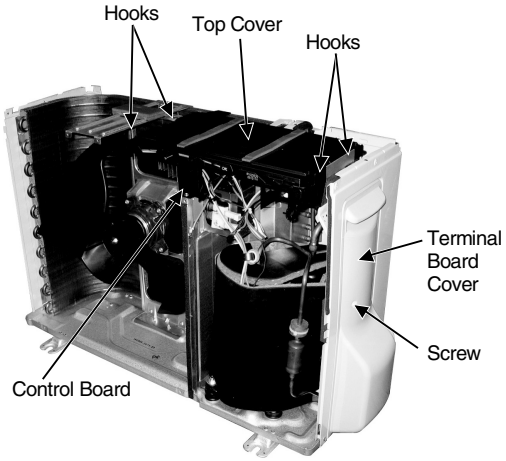

Fig. 3

5 Remove the Control Board as follows:

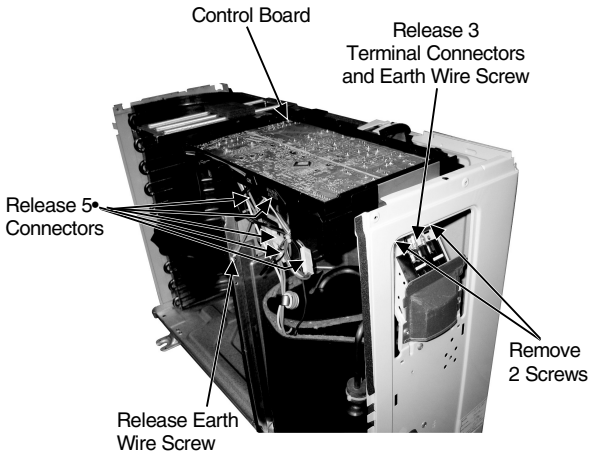

Fig. 4

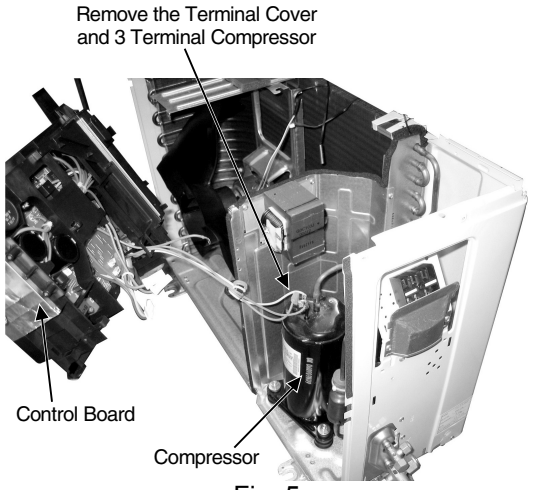

Fig. 5

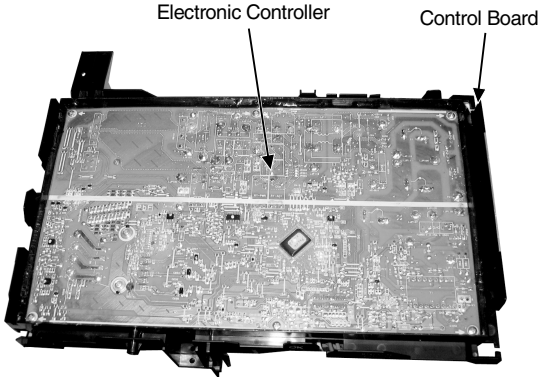

Fig. 6

19.3.2 CU-E18RKUA CU-E24RKUA

⚠ **Caution! When handling electronic controller, be careful of electrostatic discharge.**

1 Remove the 8 screws of the Top Panel.

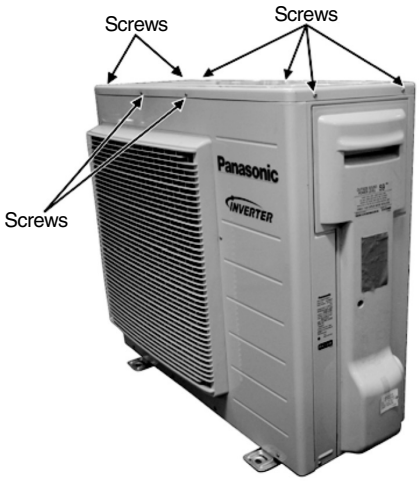

Fig. 1

2 Remove the 8 screws of the Front Panel.

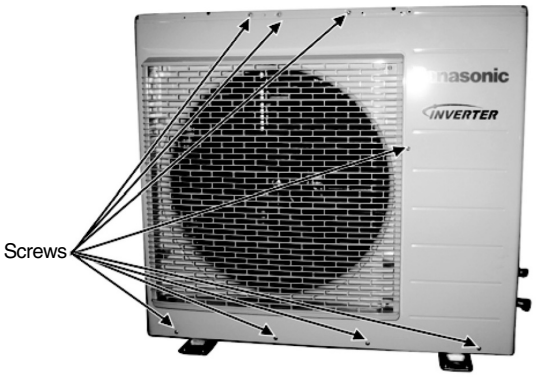

Fig. 2

3 Remove the Top Cover of the Electronic Controller.

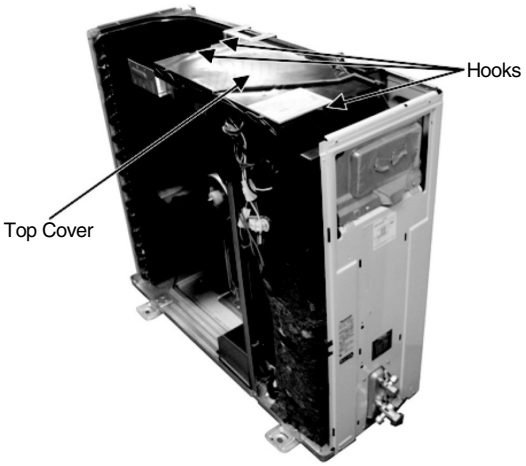

Fig. 3

4 Remove the Control Board.

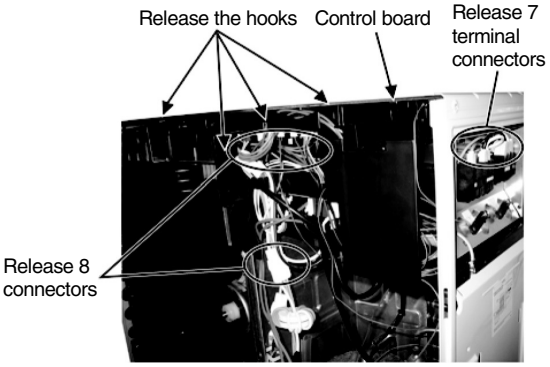

Fig. 4

5 Remove the 6 screws of the Electronic Controller.

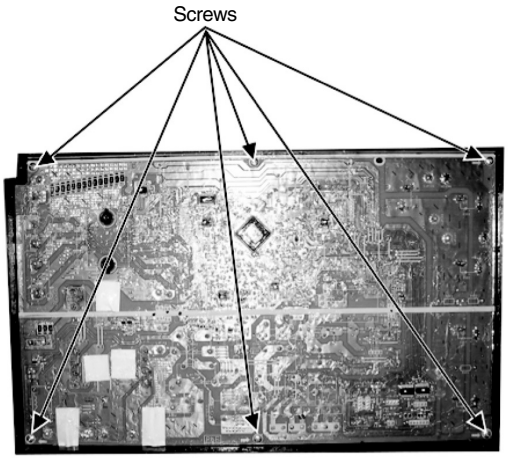

Fig. 5

⚠ Caution! When handling electronic controller, be careful of electrostatic discharge.

20. Technical Data

Technical data provided are based on the air conditioner running under free frequency.

20.1 Cool Mode Performance Data

Unit setting: Standard piping length, Hi Fan, Cool mode at 60.8°F
Voltage: 230V

20.1.1 CS-E9RKUAW CU-E9RKUA

Rated frequency (compressor speed is fixed during forced heating or cooling for capacity measurement and diagnosis purpose)

Indoor (°C / °F)		Outdoor (°C / °F)											
DB	WB	-20 (-4)			-10 (14)			0 (32)			5 (41)		
		TC	SHC	IP	TC	SHC	IP	TC	SHC	IP	TC	SHC	IP
27 (80.6)	19 (66.2)	10120	9156	508	10120	9156	516	10071	9237	504	10280	9429	476
	22 (71.6)	10694	6508	540	10694	6508	549	10760	6603	517	11617	7015	386
23 (73.4)	16 (60.8)	9471	9376	485	9471	9376	493	9153	9062	527	10369	10265	424
	18 (64.4)	9962	6484	498	9962	6484	506	9648	6373	530	10193	6706	447
20 (68)	13 (55.4)	8999	8909	525	8999	8909	534	8679	8592	547	7954	7874	375
	16 (60.8)	9274	6447	535	9274	6447	544	9299	6400	525	8372	6037	355

Indoor (°C / °F)		Outdoor (°C / °F)											
DB	WB	16 (60.8)			25 (77)			35 (95)			46 (114.8)		
		TC	SHC	IP	TC	SHC	IP	TC	SHC	IP	TC	SHC	IP
27 (80.6)	19 (66.2)	10698	9191	422	9450	8466	617	9008	8558	690	7391	6622	829
	22 (71.6)	11048	6569	420	10314	5946	590	9591	5942	678	8067	4650	792
23 (73.4)	16 (60.8)	9488	9393	473	8560	8474	633	8301	8218	699	6695	6628	850
	18 (64.4)	10035	6503	456	9406	5994	616	8515	6133	690	7357	4689	827
20 (68)	13 (55.4)	7031	6961	209	6969	6899	478	7628	7552	702	5174	5122	642
	16 (60.8)	8062	5730	402	8377	5865	630	7752	5886	695	6552	4588	847

20.1.2 CS-E12RKUAW CU-E12RKUA

Rated frequency (compressor speed is fixed during forced heating or cooling for capacity measurement and diagnosis purpose)

Indoor (°C / °F)		Outdoor (°C / °F)											
DB	WB	-20 (-4)			-10 (14)			0 (32)			5 (41)		
		TC	SHC	IP	TC	SHC	IP	TC	SHC	IP	TC	SHC	IP
27 (80.6)	19 (66.2)	12880	11530	678	12880	11530	689	12818	11632	671	13084	11874	635
	22 (71.6)	13610	8196	720	13610	8196	732	13694	8315	689	14785	8834	515
23 (73.4)	16 (60.8)	12053	11933	647	12053	11933	657	11649	11533	703	13196	13064	565
	18 (64.4)	12679	8165	664	12679	8165	674	12279	8026	706	12972	8445	596
20 (68)	13 (55.4)	11453	11339	700	11453	11339	712	11046	10935	729	10123	10022	500
	16 (60.8)	11803	8119	714	11803	8119	725	11834	8060	700	10655	7603	474

Indoor (°C / °F)		Outdoor (°C / °F)											
DB	WB	16 (60.8)			25 (77)			35 (95)			46 (114.8)		
		TC	SHC	IP	TC	SHC	IP	TC	SHC	IP	TC	SHC	IP
27 (80.6)	19 (66.2)	13616	11574	563	12028	10662	823	11465	10777	920	9407	8843	1105
	22 (71.6)	14061	8272	560	13126	7487	786	12206	7483	904	10016	6140	1086
23 (73.4)	16 (60.8)	12075	11954	631	10894	10785	844	10565	10459	932	8669	8582	1120
	18 (64.4)	12772	8190	608	11971	7549	821	10837	7723	919	8892	6337	1104
20 (68)	13 (55.4)	8948	8859	279	8870	8781	638	9708	9611	935	7966	7886	1123
	16 (60.8)	10260	7216	536	10662	7386	841	9867	7413	926	8096	6082	1113

20.1.3 CS-E18RKUAW CU-E18RKUA

Rated frequency (compressor speed is fixed during forced heating or cooling for capacity measurement and diagnosis purpose)

Indoor (°C / °F)		Outdoor (°C / °F)											
DB	WB	-20 (-4)			-10 (14)			0 (32)			5 (41)		
		TC	SHC	IP	TC	SHC	IP	TC	SHC	IP	TC	SHC	IP
27 (80.6)	19 (66.2)	21188	17930	935	21167	17913	924	21141	18234	896	21082	17831	888
	22 (71.6)	24306	14656	817	24282	14641	807	23146	14323	936	21589	13429	934
23 (73.4)	16 (60.8)	18646	18460	1032	18628	18442	1019	19803	19605	849	18879	18690	941
	18 (64.4)	20846	13794	945	20825	13780	933	23204	14860	739	21619	13003	982
20 (68)	13 (55.4)	16414	16250	1024	16398	16234	1011	16292	16129	672	15704	15547	803
	16 (60.8)	16372	12160	1182	16356	12148	1168	17139	12557	699	18527	13408	689

Indoor (°C / °F)		Outdoor (°C / °F)											
DB	WB	16 (60.8)			25 (77)			35 (95)			46 (114.8)		
		TC	SHC	IP	TC	SHC	IP	TC	SHC	IP	TC	SHC	IP
27 (80.6)	19 (66.2)	21000	18063	876	18377	16061	1195	17197	15993	1300	11804	10978	1169
	22 (71.6)	21726	14368	879	19983	12710	1208	18977	9991	1317	13026	6858	1184
23 (73.4)	16 (60.8)	19472	19278	876	17002	16832	1172	15737	15580	1373	10802	10694	1234
	18 (64.4)	21253	13726	878	18690	12233	1185	17325	11865	1398	11892	8144	1257
20 (68)	13 (55.4)	17023	16853	734	15925	15765	1171	14512	14366	1349	9961	9861	1212
	16 (60.8)	19378	15270	1189	19083	13310	1503	16210	6590	1469	11126	4523	1321

20.1.4 CS-E24RKUAW CU-E24RKUA

Rated frequency (compressor speed is fixed during forced heating or cooling for capacity measurement and diagnosis purpose)

Indoor (°C / °F)		Outdoor (°C / °F)											
DB	WB	-20 (-4)			-10 (14)			0 (32)			5 (41)		
		TC	SHC	IP	TC	SHC	IP	TC	SHC	IP	TC	SHC	IP
27 (80.6)	19 (66.2)	29512	24706	1691	29483	24681	1670	29446	25124	1621	29365	24568	1606
	22 (71.6)	33855	20194	1477	33821	20174	1459	32240	19735	1692	30071	18504	1688
23 (73.4)	16 (60.8)	25972	25712	1866	25946	25686	1843	27583	27307	1534	26296	26033	1701
	18 (64.4)	29036	19007	1708	29006	18988	1687	31474	20475	1335	30112	17917	1775
20 (68)	13 (55.4)	22863	22634	1851	22840	22612	1828	22693	22466	1214	21873	21654	1451
	16 (60.8)	22804	16755	2137	22781	16738	2111	23873	17302	1263	25806	18475	1246

Indoor (°C / °F)		Outdoor (°C / °F)											
DB	WB	16 (60.8)			25 (77)			35 (95)			46 (114.8)		
		TC	SHC	IP	TC	SHC	IP	TC	SHC	IP	TC	SHC	IP
27 (80.6)	19 (66.2)	29250	24889	1584	25596	22130	2159	23953	22037	2350	16441	15126	2113
	22 (71.6)	30261	19797	1589	27833	17513	2183	26432	13767	2381	18143	9449	2140
23 (73.4)	16 (60.8)	27122	26851	1584	23682	23445	2119	21920	21700	2481	15046	14895	2231
	18 (64.4)	29602	18912	1588	26032	16855	2141	24131	16348	2527	16563	11221	2272
20 (68)	13 (55.4)	23711	23474	1326	22181	21959	2117	20212	20010	2438	13874	13735	2192
	16 (60.8)	26991	21041	2149	26580	18340	2717	22578	9080	2655	15497	6233	2387

TC : Total capacity (BTU)
SHC: Sensible Heat Capacity (BTU)
IP: Input Power (Watt)

20.1.5 CS-E9RKUAW CU-E9RKUA

Maximum Capacity

Indoor (°C / °F)		Outdoor (°C / °F)											
DB	WB	-20 (-4)			-10 (14)			0 (32)			5 (41)		
		TC	SHC	IP	TC	SHC	IP	TC	SHC	IP	TC	SHC	IP
27 (80.6)	19 (66.2)	10120	8963	508	10120	8963	516	10073	9043	504	10281	9231	476
	22 (71.6)	10694	6372	540	10694	6372	549	10758	6463	517	11615	6866	386
23 (73.4)	16 (60.8)	9472	9377	485	9472	9377	493	9155	9063	527	10369	10266	424
	18 (64.4)	9963	6348	498	9963	6348	506	9646	6238	530	10192	6565	447
20 (68)	13 (55.4)	8998	8908	525	8998	8908	534	8677	8590	547	8268	8185	412
	16 (60.8)	9274	6312	535	9274	6312	544	9298	6265	525	9046	6386	430

Indoor (°C / °F)		Outdoor (°C / °F)											
DB	WB	16 (60.8)			25 (77)			35 (95)			46 (114.8)		
		TC	SHC	IP	TC	SHC	IP	TC	SHC	IP	TC	SHC	IP
27 (80.6)	19 (66.2)	10748	9039	432	10739	9418	730	10236	9520	850	7391	6873	829
	22 (71.6)	11601	6753	500	11301	6378	670	10898	6610	835	8066	4892	792
23 (73.4)	16 (60.8)	10305	10202	530	9830	9732	751	9433	9339	861	6695	6628	850
	18 (64.4)	10271	6516	481	9963	6216	671	9676	6822	850	7609	5365	842
20 (68)	13 (55.4)	7725	7648	274	7766	7688	564	8668	8582	864	6057	5996	768
	16 (60.8)	8766	6099	482	8906	6104	691	8809	6548	856	6773	5034	864

20.1.6 CS-E12RKUAW CU-E12RKUA

Maximum Capacity

Indoor (°C / °F)		Outdoor (°C / °F)											
DB	WB	-20 (-4)			-10 (14)			0 (32)			5 (41)		
		TC	SHC	IP	TC	SHC	IP	TC	SHC	IP	TC	SHC	IP
27 (80.6)	19 (66.2)	12898	11300	688	12929	11327	701	12884	11443	682	13157	11686	645
	22 (71.6)	13642	8041	734	13662	8053	746	13744	8168	699	14846	8682	520
23 (73.4)	16 (60.8)	12127	12005	659	12127	12005	669	11687	11570	721	13236	13103	575
	18 (64.4)	12720	8018	676	12720	8018	684	12318	8677	718	13017	8294	609
20 (68)	13 (55.4)	11506	11391	721	11506	11391	723	11103	10992	738	10492	10387	534
	16 (60.8)	11871	7992	722	11871	7992	735	11898	7931	719	10697	7470	480

Indoor (°C / °F)		Outdoor (°C / °F)											
DB	WB	16 (60.8)			25 (77)			35 (95)			46 (114.8)		
		TC	SHC	IP	TC	SHC	IP	TC	SHC	IP	TC	SHC	IP
27 (80.6)	19 (66.2)	13666	11369	573	13140	11400	945	13307	12243	1150	10079	9273	1234
	22 (71.6)	14263	8212	574	14635	8170	921	14168	8500	1130	10219	6131	1165
23 (73.4)	16 (60.8)	12250	12127	651	11721	11603	960	12263	12140	1165	8721	8634	1198
	18 (64.4)	13004	8161	628	12802	7901	921	12579	8774	1149	9233	6440	1198
20 (68)	13 (55.4)	9499	9404	305	9998	9898	756	11269	11156	1169	8175	8094	1254
	16 (60.8)	10721	7380	570	11038	7484	919	11452	8421	1158	8384	6165	1196

20.1.7 CS-E18RKUAW CU-E18RKUA

Maximum Capacity

Indoor (°C / °F)		Outdoor (°C / °F)											
DB	WB	-20 (-4)			-10 (14)			0 (32)			5 (41)		
		TC	SHC	IP	TC	SHC	IP	TC	SHC	IP	TC	SHC	IP
27 (80.6)	19 (66.2)	21189	17546	935	21166	17526	924	21142	17843	896	21084	17448	888
	22 (71.6)	24305	14340	817	24281	14326	807	23148	14016	936	21930	13348	956
23 (73.4)	15.7 (60.26)	18647	18461	1059	18627	18441	1046	19804	19606	871	19869	19670	1020
	18.4 (65.12)	20845	13497	969	20824	13483	958	23203	14540	758	22131	13801	1005
20 (68)	13.3 (55.94)	16429	16265	1051	16467	16302	1038	16344	16181	689	15969	15809	855
	15.8 (60.44)	16395	11915	1213	16354	11885	1198	17238	12358	717	18699	13241	735

Indoor (°C / °F)		Outdoor (°C / °F)											
DB	WB	16 (60.8)			25 (77)			35 (95)			46 (114.8)		
		TC	SHC	IP	TC	SHC	IP	TC	SHC	IP	TC	SHC	IP
27 (80.6)	19 (66.2)	21002	17676	896	20650	17660	1395	19790	18009	1600	11803	10740	1169
	22 (71.6)	22971	14257	972	22493	13999	1415	21839	11251	1621	13024	6710	1184
23 (73.4)	15.7 (60.26)	20101	19900	945	18876	18687	1358	18110	17929	1689	10803	10695	1234
	18.4 (65.12)	21595	13647	921	20343	13029	1341	19937	13360	1720	12014	8051	1290
20 (68)	13.3 (55.94)	17252	17079	785	17043	16872	1301	16700	16533	1660	10107	10006	1268
	15.8 (60.44)	21220	13940	1340	20423	13938	1682	18654	7421	1808	11332	4508	1387

20.1.8 CS-E24RKUAW CU-E24RKUA

Maximum Capacity

Indoor (°C / °F)		Outdoor (°C / °F)											
DB	WB	-20 (-4)			-10 (14)			0 (32)			5 (41)		
		TC	SHC	IP	TC	SHC	IP	TC	SHC	IP	TC	SHC	IP
27 (80.6)	19 (66.2)	29529	24182	1698	29508	24166	1681	29484	24610	1631	29396	24059	1621
	22 (71.6)	33889	19776	1510	33886	19774	1511	32286	19334	1699	30549	18389	1756
23 (73.4)	15.7 (60.26)	26041	25781	1886	26014	25754	1858	27645	27369	1559	26693	26426	1721
	18.4 (65.12)	29126	18651	1721	29109	18640	1721	31678	19633	1374	30211	18633	1801
20 (68)	13.3 (55.94)	22981	22751	1883	22967	22737	1856	22865	22636	1264	22118	21896	1498
	15.8 (60.44)	22865	16434	2158	22899	16459	2164	24103	17090	1301	25973	18190	1358

Indoor (°C / °F)		Outdoor (°C / °F)											
DB	WB	16 (60.8)			25 (77)			35 (95)			46 (114.8)		
		TC	SHC	IP	TC	SHC	IP	TC	SHC	IP	TC	SHC	IP
27 (80.6)	19 (66.2)	29283	24375	1591	28181	23835	2541	27297	24567	2720	16457	14811	2126
	22 (71.6)	30371	18644	1618	30348	18680	2481	30122	15347	2756	18200	9273	2180
23 (73.4)	15.7 (60.26)	27338	27065	1654	26106	25845	2431	24980	24730	2872	15205	15052	2275
	18.4 (65.12)	29757	18598	1611	27928	17690	2464	27499	18225	2924	16904	11203	2321
20 (68)	13.3 (55.94)	23957	23717	1336	23626	23389	2400	23034	22804	2822	14061	13921	2212
	15.8 (60.44)	29269	19017	2451	28170	19014	3000	25730	10123	3074	15553	6119	2421

TC : Total capacity (BTU)
SHC: Sensible Heat Capacity (BTU)
IP: Input Power (Watt)

20.2 Heat Mode Performance Data

Unit setting: Standard piping length, Hi Fan, Heat mode at 86°F
Voltage: 230V

20.2.1 CS-E9RKUAW CU-E9RKUA

Rated frequency (compressor speed is fixed during forced heating or cooling for capacity measurement and diagnosis purpose)

Indoor (°C / °F)	Outdoor (°C / °F)											
DB	-20 (-4)		-8.3 (17.06)		1.7 (35.06)		8.3 (46.94)		12 (53.6)		23.9 (75.02)	
	TC	IP	TC	IP	TC	IP	TC	IP	TC	IP	TC	IP
24 (75.2)	4364	747	8712	1039	11021	1128	12059	1129	12375	1149	13471	1114
20 (68)	4598	736	9315	1035	11336	1106	12011	1120	12253	1124	14239	1089
16 (60.8)	3711	718	9571	1024	12262	1116	12890	1149	12988	1104	13891	1071

20.2.2 CS-E12RKUAW CU-E12RKUA

Rated frequency (compressor speed is fixed during forced heating or cooling for capacity measurement and diagnosis purpose)

Indoor (°C / °F)	Outdoor (°C / °F)											
DB	-20 (-4)		-8.3 (17.06)		1.7 (35.06)		8.3 (46.94)		12 (53.6)		23.9 (75.02)	
	TC	IP	TC	IP	TC	IP	TC	IP	TC	IP	TC	IP
24 (75.2)	5021	833	10024	1159	12681	1259	13875	1260	13337	1282	15499	1243
20 (68)	5290	822	10717	1155	13043	1235	13819	1250	14098	1254	16383	1216
16 (60.8)	4270	802	11012	1143	14108	1245	14831	1283	13753	1233	15983	1195

20.2.3 CS-E18RKUAW CU-E18RKUA

Rated frequency (compressor speed is fixed during forced heating or cooling for capacity measurement and diagnosis purpose)

Indoor (°C / °F)	Outdoor (°C / °F)											
DB	-20 (-4)		-8.3 (17.06)		1.7 (35.06)		8.3 (46.94)		12 (53.6)		23.9 (75.02)	
	TC	IP	TC	IP	TC	IP	TC	IP	TC	IP	TC	IP
24 (75.2)	6715	1213	12572	1615	16051	1628	21041	1850	21969	1839	23675	1767
20 (68)	6913	1169	12610	1554	16284	1561	21599	1750	22844	1765	24618	1695
16 (60.8)	6455	1117	12720	1485	16459	1495	22135	1654	23456	1671	25278	1605

20.2.4 CS-E24RKUAW CU-E24RKUA

Rated frequency (compressor speed is fixed during forced heating or cooling for capacity measurement and diagnosis purpose)

Indoor (°C / °F)	Outdoor (°C / °F)											
DB	-20 (-4)		-8.3 (17.06)		1.7 (35.06)		8.3 (46.94)		12 (53.6)		23.9 (75.02)	
	TC	IP	TC	IP	TC	IP	TC	IP	TC	IP	TC	IP
24 (75.2)	8975	1733	16802	2307	21452	2326	28122	2643	29361	2628	31641	2524
20 (68)	9239	1670	16854	2220	21764	2230	28867	2500	30530	2522	32901	2422
16 (60.8)	8627	1596	17000	2122	21997	2136	29584	2363	31349	2388	33784	2293

TC : Total capacity (BTU)
IP: Input Power (Watt)

20.2.5 CS-E9RKUAW CU-E9RKUA

Maximum Capacity

Indoor (°C / °F)	Outdoor (°C / °F)											
DB	-20 (-4)		-8.3 (17.06)		1.7 (35.06)		8.3 (46.94)		12 (53.6)		23.9 (75.02)	
	TC	IP	TC	IP	TC	IP	TC	IP	TC	IP	TC	IP
24 (75.2)	7056	1301	9370	1320	12234	1459	14183	1512	14534	1525	15225	1424
20 (68)	7433	1295	10019	1315	12583	1431	14126	1500	14390	1491	16093	1393
16 (60.8)	6000	1261	10294	1301	13611	1443	15160	1539	15253	1466	15700	1369

20.2.6 CS-E12RKUAW CU-E12RKUA

Maximum Capacity

Indoor (°C / °F)	Outdoor (°C / °F)											
DB	-20 (-4)		-8.3 (17.06)		1.7 (35.06)		8.3 (46.94)		12 (53.6)		23.9 (75.02)	
	TC	IP	TC	IP	TC	IP	TC	IP	TC	IP	TC	IP
24 (75.2)	8129	1625	10796	1505	14095	1663	16342	1724	15685	1738	17541	1623
20 (68)	8564	1664	11543	1499	14498	1631	16276	1710	16580	1700	18542	1588
16 (60.8)	6914	1654	11861	1484	15682	1645	17468	1755	16175	1671	18089	1561

20.2.7 CS-E18RKUAW CU-E18RKUA

Maximum Capacity

Indoor (°C / °F)	Outdoor (°C / °F)											
DB	-20 (-4)		-8.3 (17.06)		1.7 (35.06)		8.3 (46.94)		12 (53.6)		23.9 (75.02)	
	TC	IP	TC	IP	TC	IP	TC	IP	TC	IP	TC	IP
24 (75.2)	9834	1881	14795	1984	18316	1952	21374	1903	22308	1892	24058	1783
20 (68)	10124	1825	14840	1910	18582	1843	21940	1800	23196	1816	25016	1711
16 (60.8)	9454	1750	14969	1829	18782	1781	22485	1702	23818	1719	25687	1620

20.2.8 CS-E24RKUAW CU-E24RKUA

Maximum Capacity

Indoor (°C / °F)	Outdoor (°C / °F)											
DB	-20 (-4)		-8.3 (17.06)		1.7 (35.06)		8.3 (46.94)		12 (53.6)		23.9 (75.02)	
	TC	IP	TC	IP	TC	IP	TC	IP	TC	IP	TC	IP
24 (75.2)	13092	2741	19696	2832	24383	2755	28454	2812	29697	2796	32027	2525
20 (68)	13478	2641	19756	2761	24738	2650	29208	2660	30880	2683	33303	2423
16 (60.8)	12585	2500	19928	2684	25003	2521	29933	2515	31708	2541	34196	2295

TC : Total capacity (BTU)
IP: Input Power (Watt)

21. Service Data

Service data provided are based on the air conditioner running under rated frequency during forced cooling / forced heating mode.

21.1 Cool Mode Outdoor Air Temperature Characteristic

Condition

- Indoor room temperature: 80°F Dry Bulb/67°F Wet Bulb
- Unit setting: Standard piping length, forced cooling at 60.8°F, Hi fan
- Compressor frequency: Rated for cooling operation
- Piping length: 24.6ft
- Voltage: 230V

21.1.1 CS-E9RKUAW CU-E9RKUA

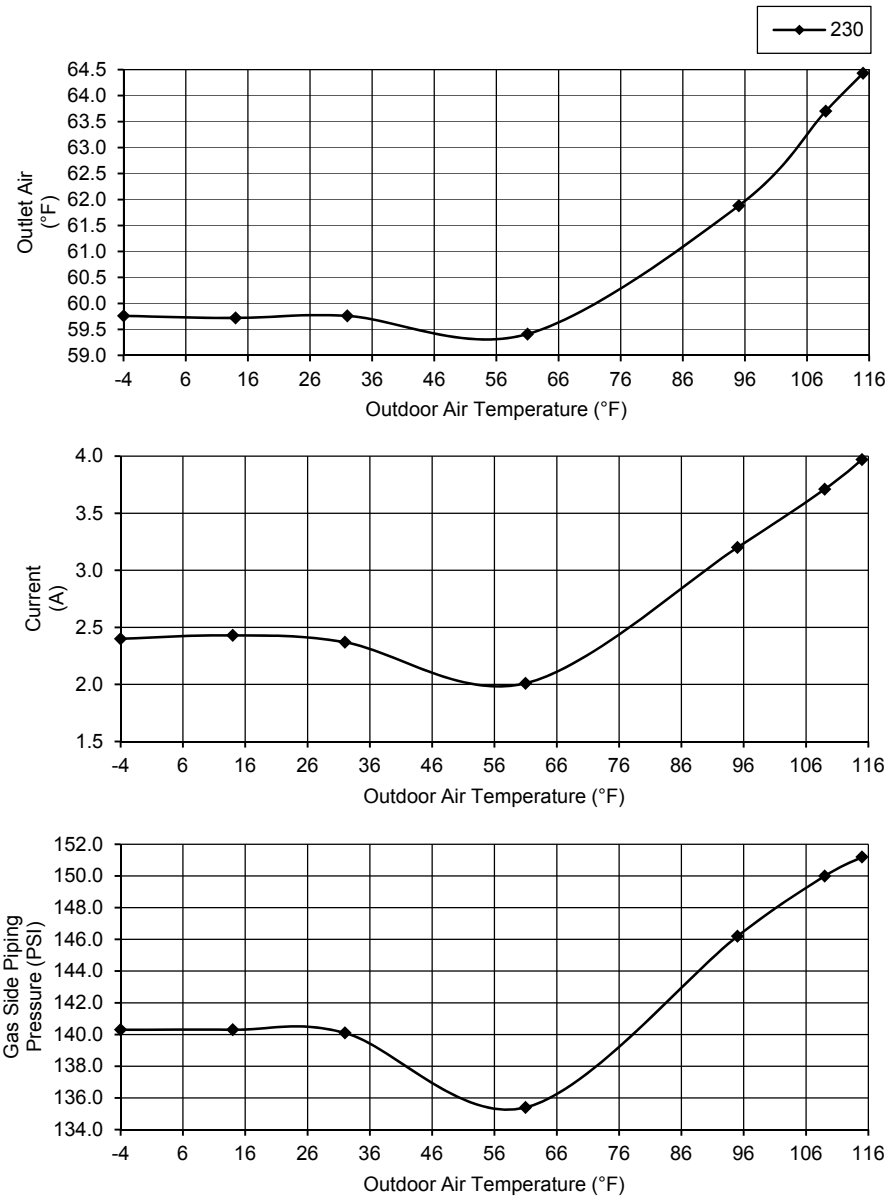

21.1.2 CS-E12RKUAW CU-E12RKUA

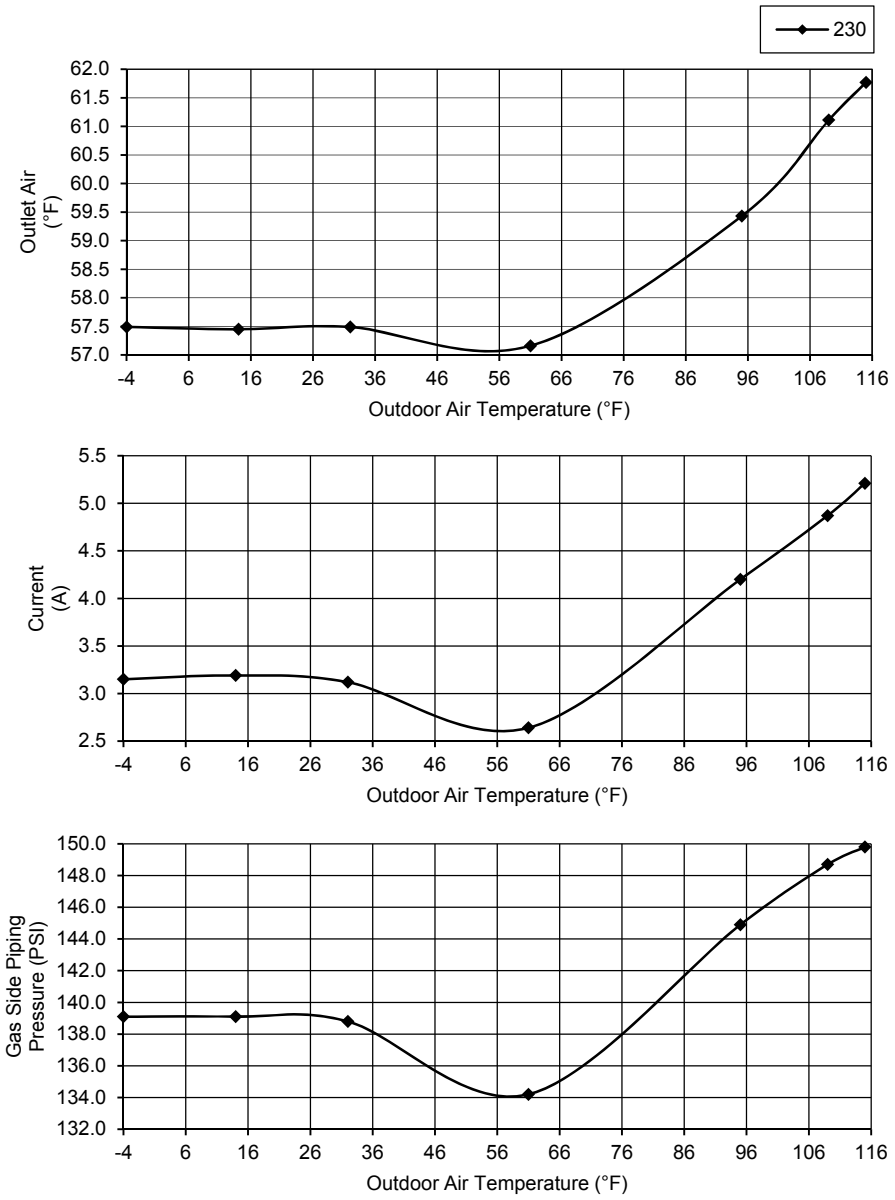

21.1.3 CS-E18RKUAW CU-E18RKUA

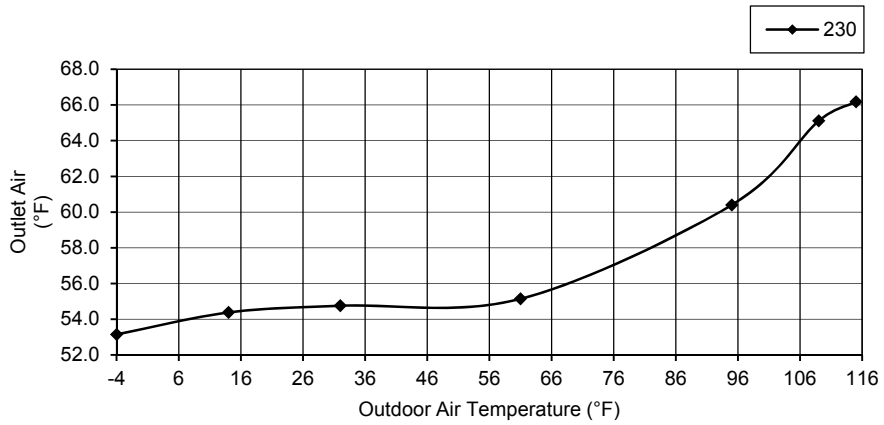

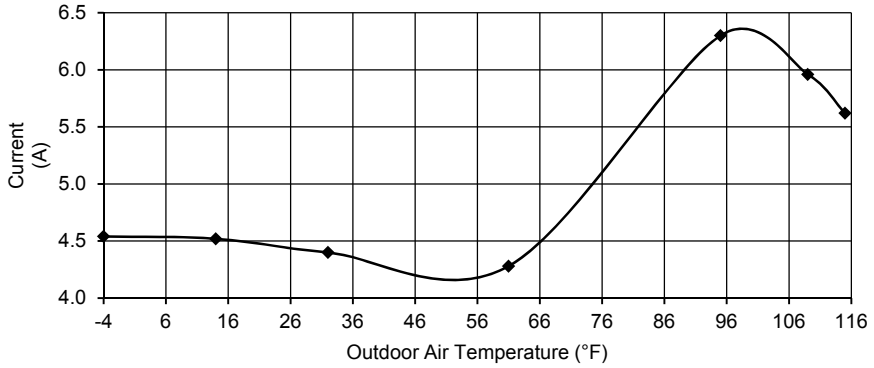

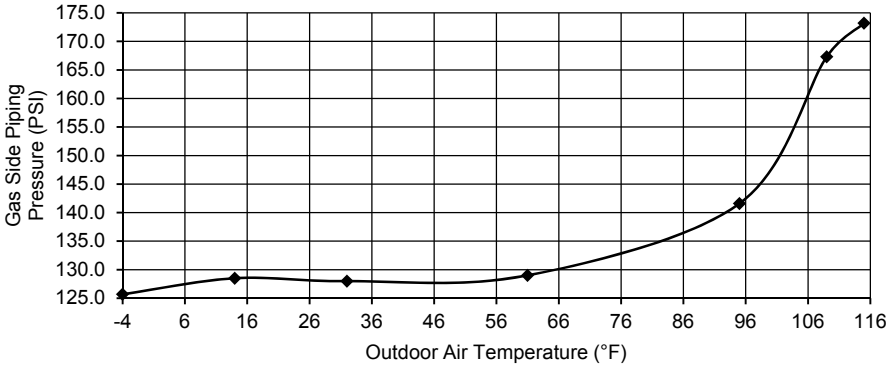

21.1.4 CS-E24RKUAW CU-E24RKUA

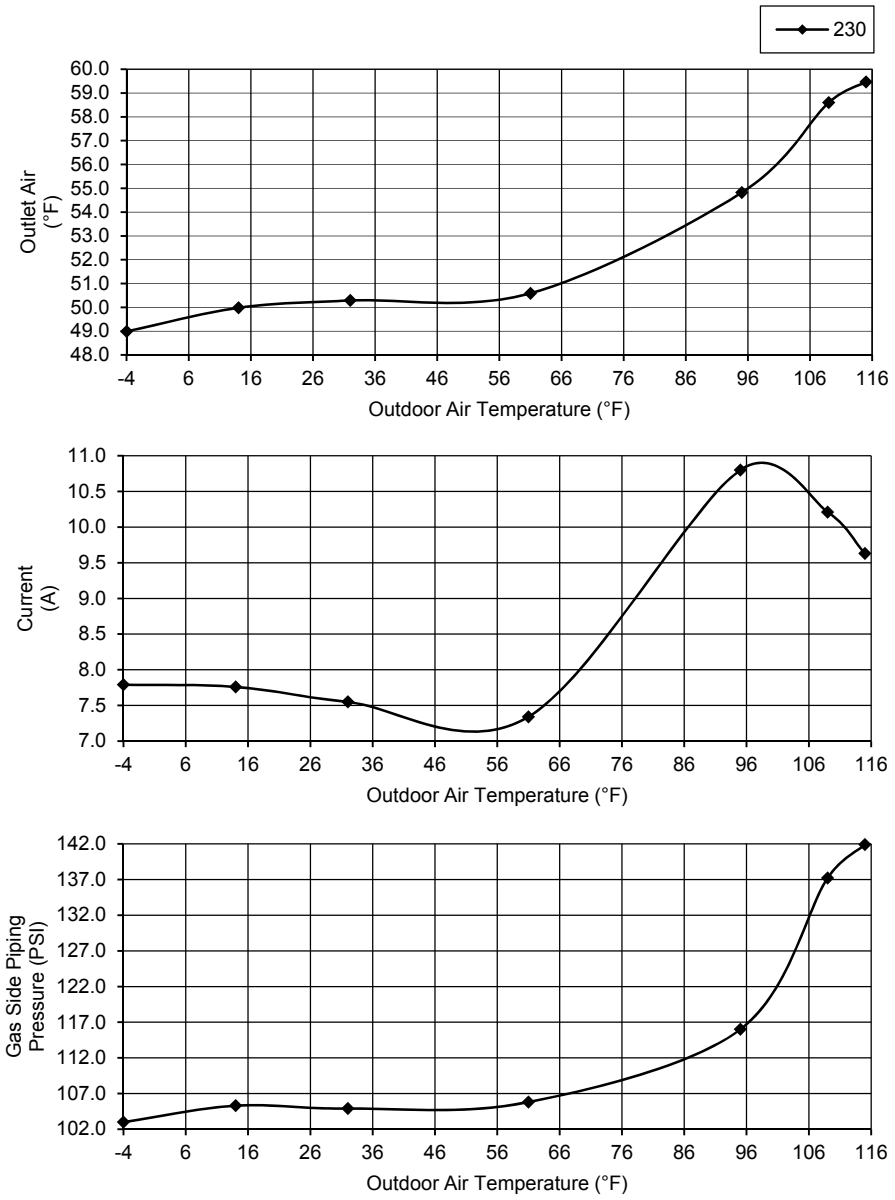

21.2 Heat Mode Outdoor Air Temperature Characteristic

Condition

- Indoor room temperature: 68°F Dry Bulb/-°F Wet Bulb
- Unit setting: Standard piping length, forced heating at 86°F, Hi fan
- Compressor frequency: Rated for Heating operation
- Piping length: 24.6ft
- Voltage: 230V

21.2.1 CS-E9RKUAW CU-E9RKUA

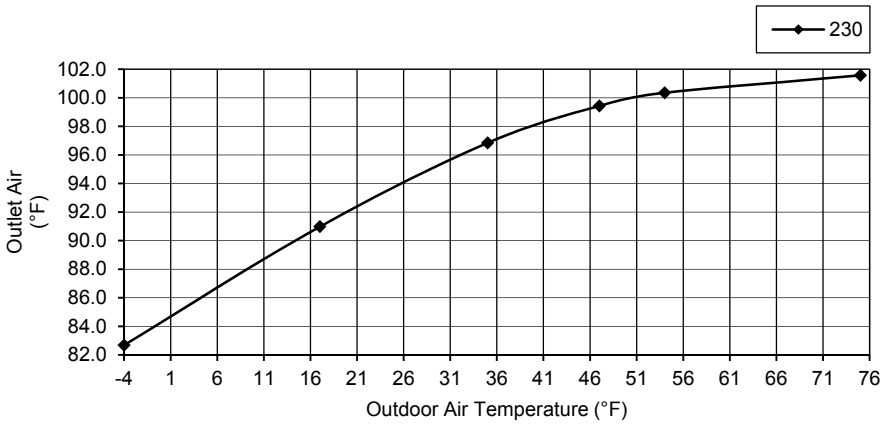

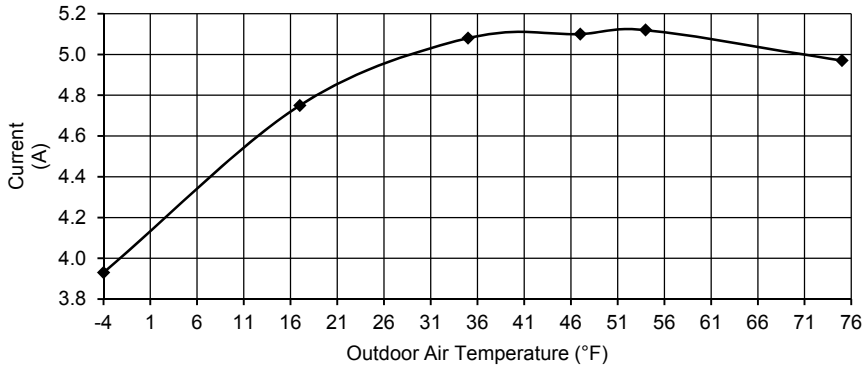

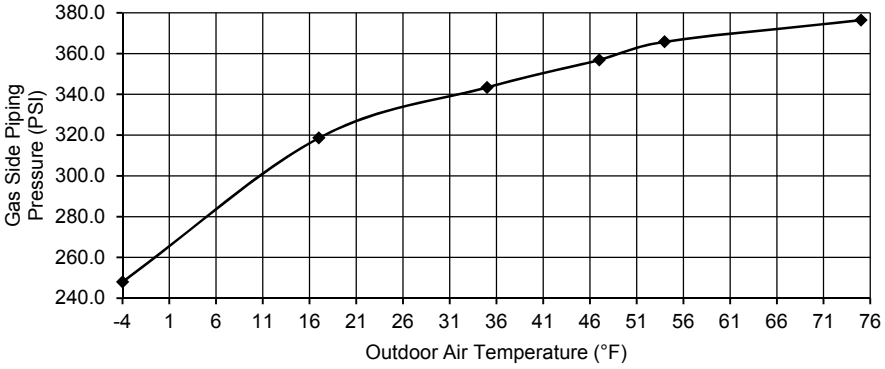

21.2.2 CS-E12RKUAW CU-E12RKUA

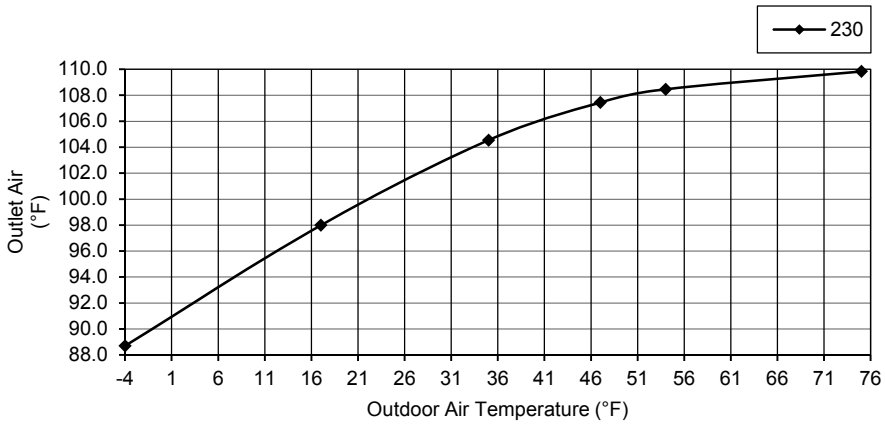

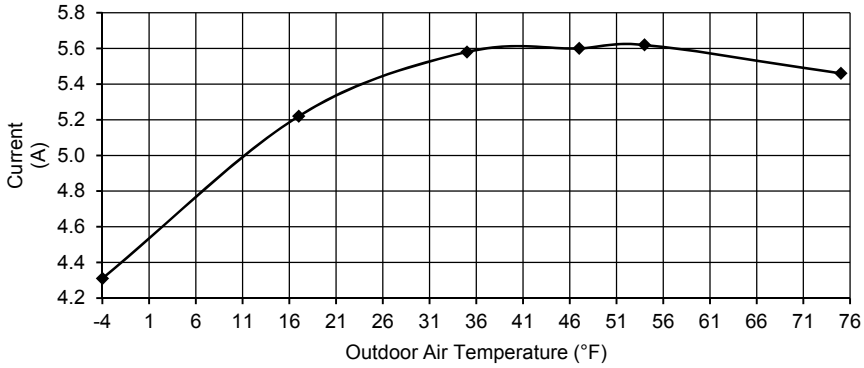

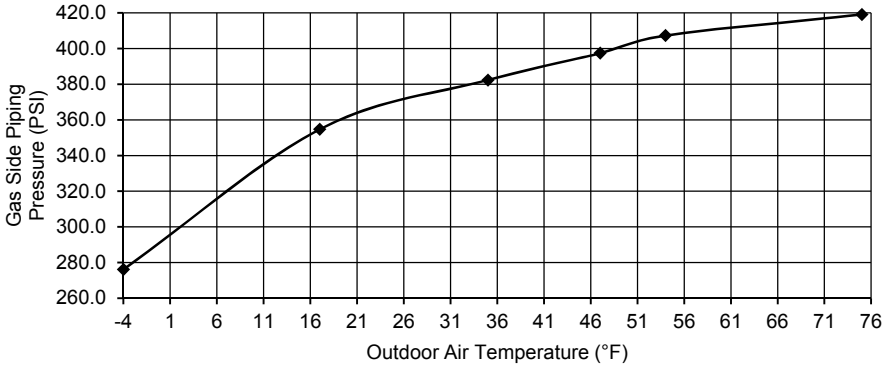

21.2.3 CS-E18RKUAW CU-E18RKUA

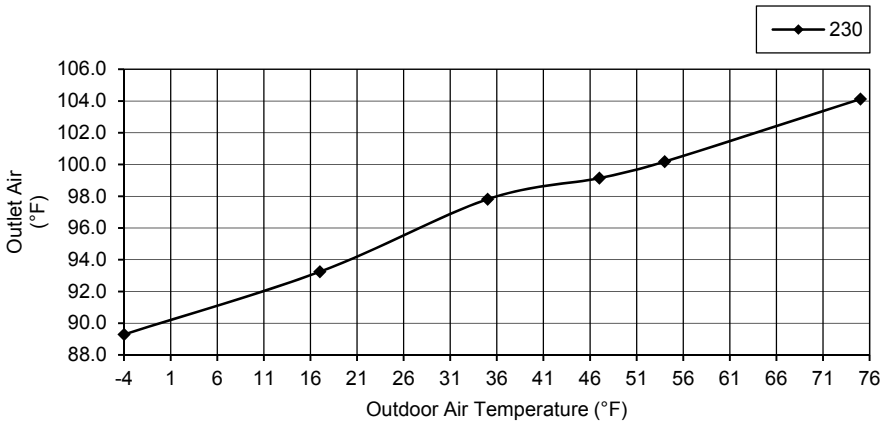

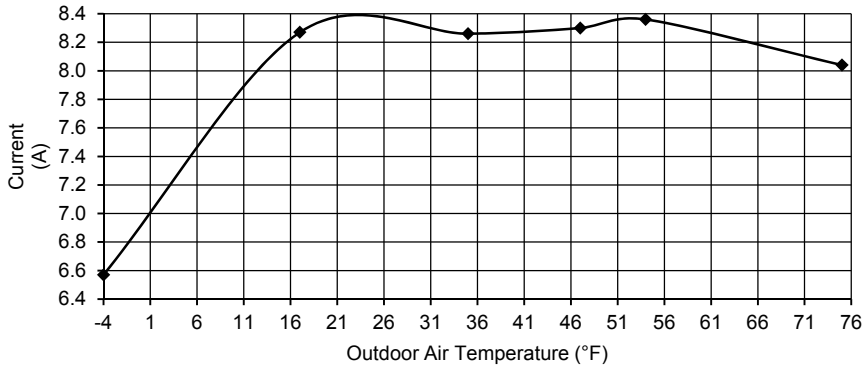

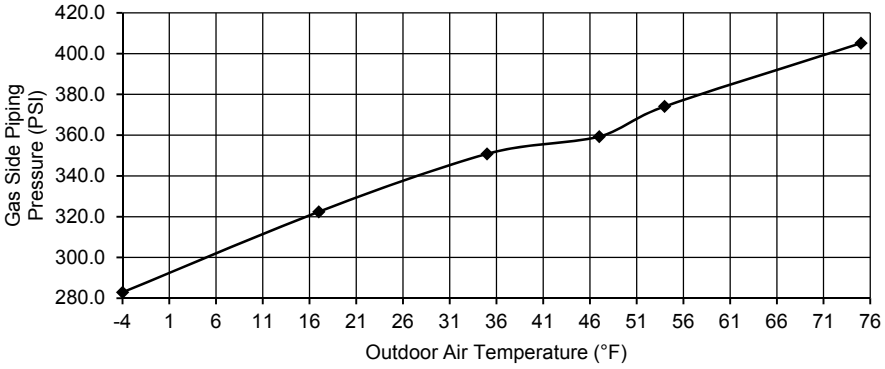

21.2.4 CS-E24RKUAW CU-E24RKUA

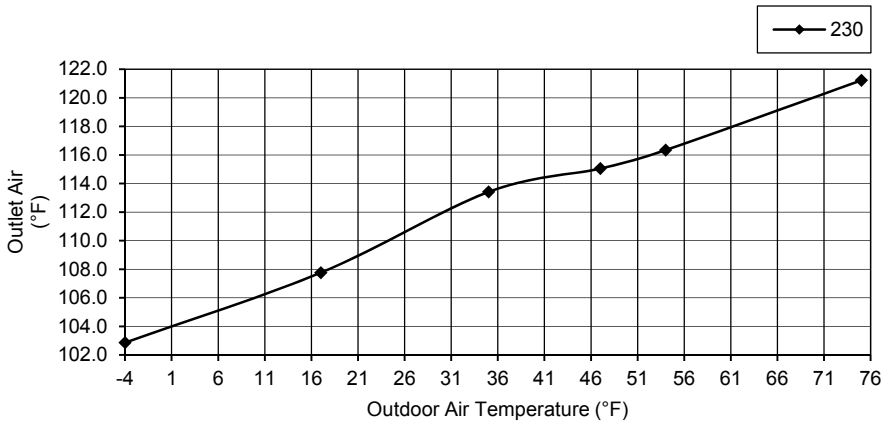

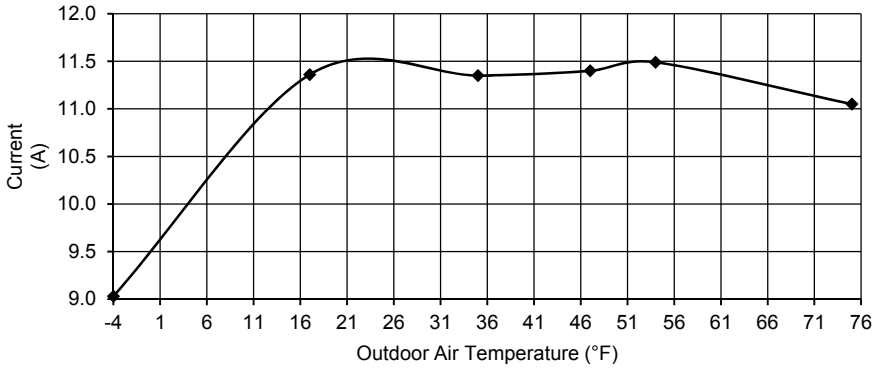

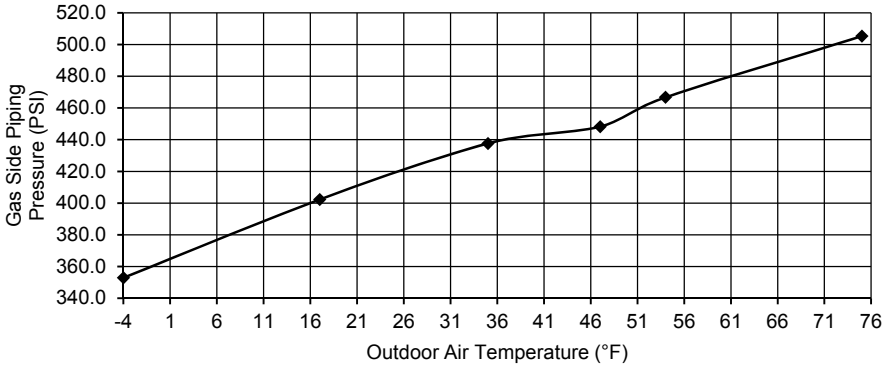

21.3 Piping Length Correction Factor

The characteristic of the unit has to be corrected in accordance with the piping length.

21.3.1 CS-E9RKUAW CU-E9RKUA CS-E12RKUAW CU-E12RKUA

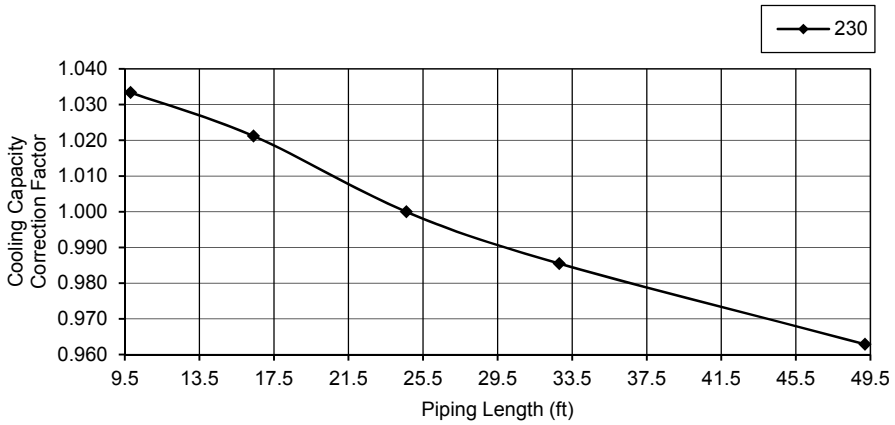

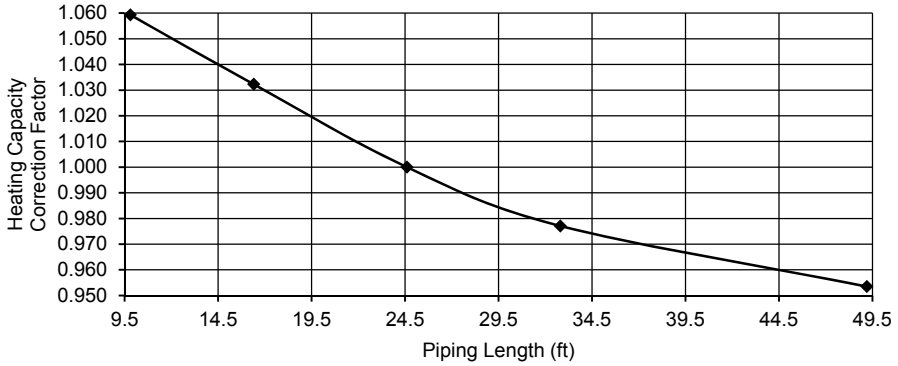

Note: The graphs show the factor after added right amount of additional refrigerant.

21.3.2 CS-E18RKUAW CU-E18RKUA CS-E24RKUAW CU-E24RKUA

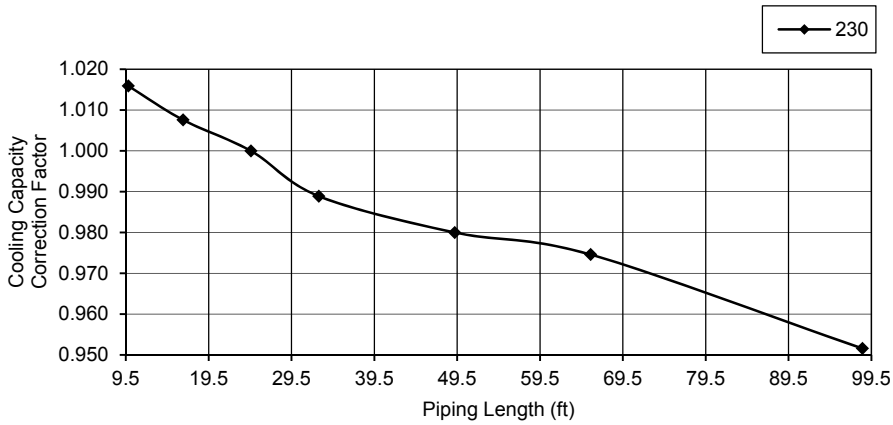

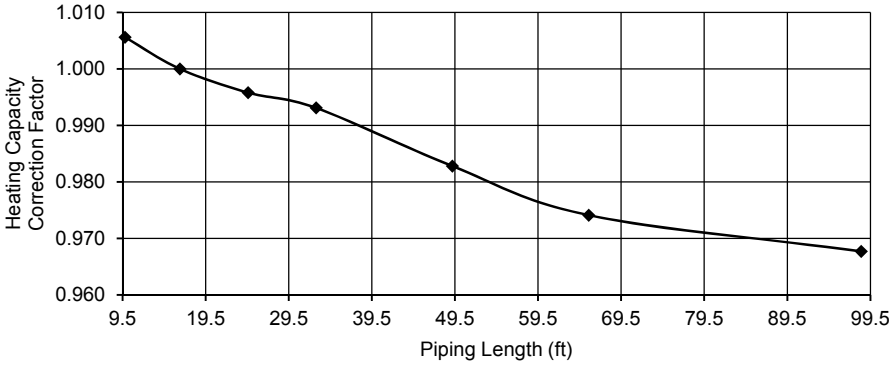

Note: The graphs show the factor after added right amount of additional refrigerant.

22. Exploded View and Replacement Parts List

22.1 Indoor Unit

22.1.1 CS-E9RKUAW CS-E12RKUAW

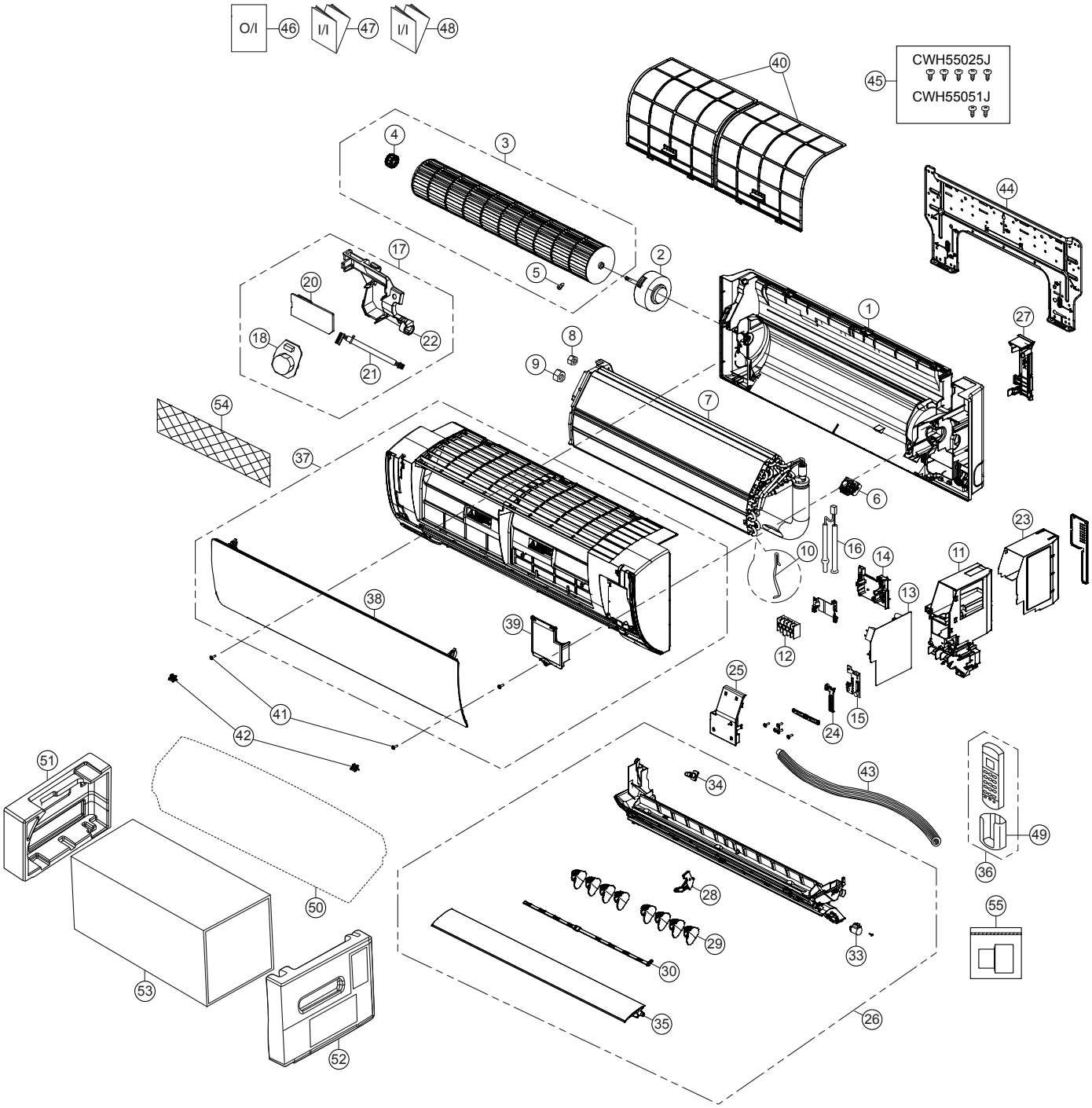

Note
The above exploded view is for the purpose of parts disassembly and replacement.
The non-numbered parts are not kept as standard service parts.

SAFETY	REF. NO.	PART NAME & DESCRIPTION	QTY.	CS-E9RKUAW	CS-E12RKUAW	REMARK
	1	CHASSIS COMPLETE	1	CWD50C1633	←	
⚠	2	FAN MOTOR	1	L6CBYYYL0055	←	O
	3	CROSS-FLOW FAN COMPLETE	1	CWH02C1076	←	
	4	BEARING ASSY	1	CWH64K007	←	O
	5	SCREW - CROSS-FLOW FAN	1	CWH551146	←	
	6	PARTICULAR PIECE	1	CWD933067	←	
	7	EVAPORATOR	1	CWB30C5033	CWB30C5026	
	8	FLARE NUT (LIQUID)	1	CWT251030	←	
	9	FLARE NUT (GAS)	1	CWT251031	CWT251032	
	10	CLIP FOR SENSOR	1	CWH321085	←	
	11	CONTROL BOARD CASING	1	CWH102605A	←	
	12	TERMINAL BOARD COMPLETE	1	CWA28C2357	←	O
⚠	13	ELECTRONIC CONTROLLER - MAIN	1	CWA73C9156	CWA73C9157	O
	14	PARTICULAR PIECE - TERMINAL	1	CWD933137A	←	
⚠	15	ELECTRONIC CONTROLLER-INDICATOR	1	CWA748158	←	O
	16	SENSOR COMPLETE	1	CWA50C3228	←	O
	17	SENSOR COMPLETE (ECO)	1	CWA50C2820	←	O
⚠	18	ELECTRONIC CONTROLLER (ECO SENSOR)	1	CWA745791	←	O
⚠	20	ELECTRONIC CONTROLLER (COMPARATOR)	1	CWA746769	←	O
	21	LEAD WIRE - PCB ECO	1	CWA67C9786	←	O
	22	CONTROL BOARD CASING FOR PCB ECO	1	CWD933427	←	
	23	CONTROL BOARD TOP COVER	1	CWH131467	←	
	24	INDICATOR HOLDER	1	CWD933406	←	
	25	CONTROL BOARD FRONT COVER CO.	1	CWH13C1333	←	
	26	DISCHARGE GRILLE COMPLETE	1	CWE20C3495	←	
	27	BACK COVER CHASSIS	1	CWD933233B	←	
	28	FULCRUM	1	CWH621131	←	
	29	VERTICAL VANE	8	CWE241374	←	
	30	CONNECTING BAR	2	CWE261251	←	
⚠	33	AIR SWING MOTOR	1	CWA981264	←	O
	34	CAP - DRAIN TRAY	1	CWH521259	←	
	35	HORIZONTAL VANE COMPLETE	1	CWE24C1385	←	
	36	REMOTE CONTROL COMPLETE	1	CWA75C4567	←	O
	37	FRONT GRILLE COMPLETE	1	CWE11C5960	←	O
	38	INTAKE GRILLE COMPLETE	1	CWE22C1946	←	
	39	GRILLE DOOR COMPLETE	1	CWE14C1131	←	
	40	AIR FILTER	2	CWD001279	←	O
	41	SCREW - FRONT GRILLE	2	XTT4+16CFJ	←	
	42	CAP - FRONT GRILLE	2	CWH521227	←	
	43	DRAIN HOSE	1	CWH851173	←	
	44	INSTALLATION PLATE	1	CWH361134	←	
	45	BAG COMPLETE - INSTALLATION SCREW	1	CWH82C1705	←	
	46	OPERATING INSTRUCTION	1	CWF569755	←	
	47	INSTALLATION INSTRUCTION	1	CWF616529	←	
	48	INSTALLATION INSTRUCTION	1	CWF616530	←	
	49	REMOTE CONTROL HOLDER	1	CWH361078	←	
	50	BAG	1	CWG861497	←	

SAFETY	REF. NO.	PART NAME & DESCRIPTION	QTY.	CS-E9RKUAW	CS-E12RKUAW	REMARK
	51	SHOCK ABSORBER (L)	1	CWG713386	←	
	52	SHOCK ABSORBER (R)	1	CWG713387	←	
	53	C.C.CASE	1	CWG567355	←	
	54	AIR PURIFYING FILTER	1	CWD00C1141	←	O
	55	BAG COMPLETE (TUBE CONNECTOR)	1	CWH82C2030	←	

(Note)

- All parts are supplied from PHAAM, Malaysia (Vendor Code: 00029488).
- “O” marked parts are recommended to be kept in stock.

22.1.2 CS-E18RKUAW CS-E24RKUAW

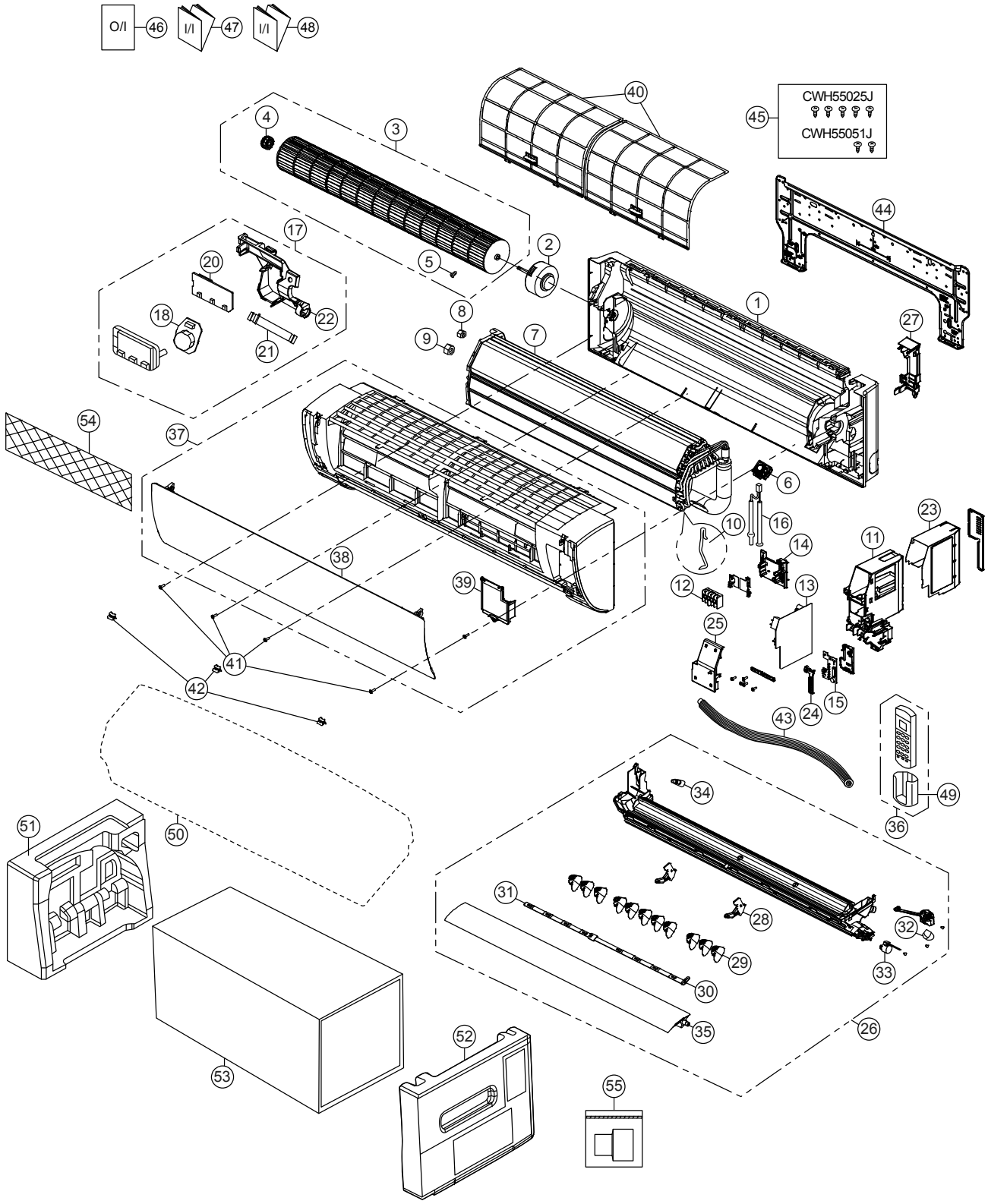

Note
The above exploded view is for the purpose of parts disassembly and replacement.
The non-numbered parts are not kept as standard service parts.

SAFETY	REF. NO.	PART NAME & DESCRIPTION	QTY.	CS-E18RKUAW	CS-E24RKUAW	REMARK
	1	CHASSIS COMPLETE	1	CWD50C1637	←	
⚠	2	FAN MOTOR	1	L6CBYYYL0056	←	O
	3	CROSS-FLOW FAN COMPLETE	1	CWH02C1077	←	
	4	BEARING ASSY	1	CWH64K007	←	O
	5	SCREW - CROSS-FLOW FAN	1	CWH551146	←	
	6	PARTICULAR PIECE	1	CWD933067	←	
	7	EVAPORATOR	1	CWB30C3963	CWB30C3967	
	8	FLARE NUT (LIQUID)	1	CWT251030	←	
	9	FLARE NUT (GAS)	1	CWT251032	CWT251033	
	10	CLIP FOR SENSOR	1	CWH32142	←	
	11	CONTROL BOARD CASING	1	CWH102605A	←	
⚠	12	TERMINAL BOARD COMPLETE	1	CWA28C2357	←	O
⚠	13	ELECTRONIC CONTROLLER - MAIN	1	CWA73C9158	CWA73C9159	O
	14	PARTICULAR PIECE - TERMINAL	1	CWD933137A	←	
⚠	15	ELECTRONIC CONTROLLER-INDICATOR	1	CWA748158	←	O
	16	SENSOR COMPLETE	1	CWA50C3228	←	O
	17	SENSOR COMPLETE (ECO)	1	CWA50C2827	←	O
⚠	18	ELECTRONIC CONTROLLER (ECO SENSOR)	1	CWA745791	←	O
⚠	20	ELECTRONIC CONTROLLER (COMPARATOR)	1	CWA746769	←	O
	21	LEAD WIRE - PCB ECO	1	CWA67C9935	←	O
	22	CONTROL BOARD CASING FOR PCB ECO	1	CWD933455	←	
	23	CONTROL BOARD TOP COVER	1	CWH131467	←	
	24	INDICATOR HOLDER	1	CWD933406	←	
	25	CONTROL BOARD FRONT COVER CO.	1	CWH13C1333	←	
	26	DISCHARGE GRILLE COMPLETE	1	CWE20C3496	←	
	27	BACK COVER CHASSIS	1	CWD933031B	←	
	28	FULCRUM	1	CWH621138	←	
	29	VERTICAL VANE	11	CWE241374	←	
	30	CONNECTING BAR	1	CWE261257	←	
	31	CONNECTING BAR	1	CWE261258	←	
⚠	32	AIR SWING MOTOR ASS'Y.	1	CWA98K1024	←	
⚠	33	AIR SWING MOTOR	1	CWA981241	←	O
	34	CAP - DRAIN TRAY	1	CWH521259	←	
	35	HORIZONTAL VANE COMPLETE	1	CWE24C1392	←	
	36	REMOTE CONTROL COMPLETE	1	CWA75C4569	←	O
	37	FRONT GRILLE COMPLETE	1	CWE11C5961	←	O
	38	INTAKE GRILLE COMPLETE	1	CWE22C1945	←	
	39	GRILLE DOOR COMPLETE	1	CWE14C1131	←	
	40	AIR FILTER	2	CWD001283	←	O
	41	SCREW - FRONT GRILLE	3	XTT4+16CFJ	←	
	42	CAP - FRONT GRILLE	3	CWH521227	←	
	43	DRAIN HOSE	1	CWH851173	←	
	44	INSTALLATION PLATE	1	CWH361098	←	
	45	BAG COMPLETE - INSTALLATION SCREW	1	CWH82C1705	←	
	46	OPERATING INSTRUCTION	1	CWF569756	←	
	47	INSTALLATION INSTRUCTION	1	CWF616730	←	
	48	INSTALLATION INSTRUCTION	1	CWF616731	←	

SAFETY	REF. NO.	PART NAME & DESCRIPTION	QTY.	CS-E18RKUAW	CS-E24RKUAW	REMARK
	49	REMOTE CONTROL HOLDER	1	CWH361078	←	
	50	BAG	1	CWG861498	←	
	51	SHOCK ABSORBER (L)	1	CWG713402	←	
	52	SHOCK ABSORBER (R)	1	CWG713403	←	
	53	C.C. CASE	1	CWG567455	←	
	54	AIR PURIFYING FILTER	1	CWD00C1141	←	O
	55	BAG COMPLETE (TUBE CONNECTOR)	1	CWH82C2030	←	

(Note)

- All parts are supplied from PAPAMY, Malaysia (Vendor Code: 00029488).
- “O” marked parts are recommended to be kept in stock.

22.2 Outdoor Unit

22.2.1 CU-E9RKUA CU-E12RKUA

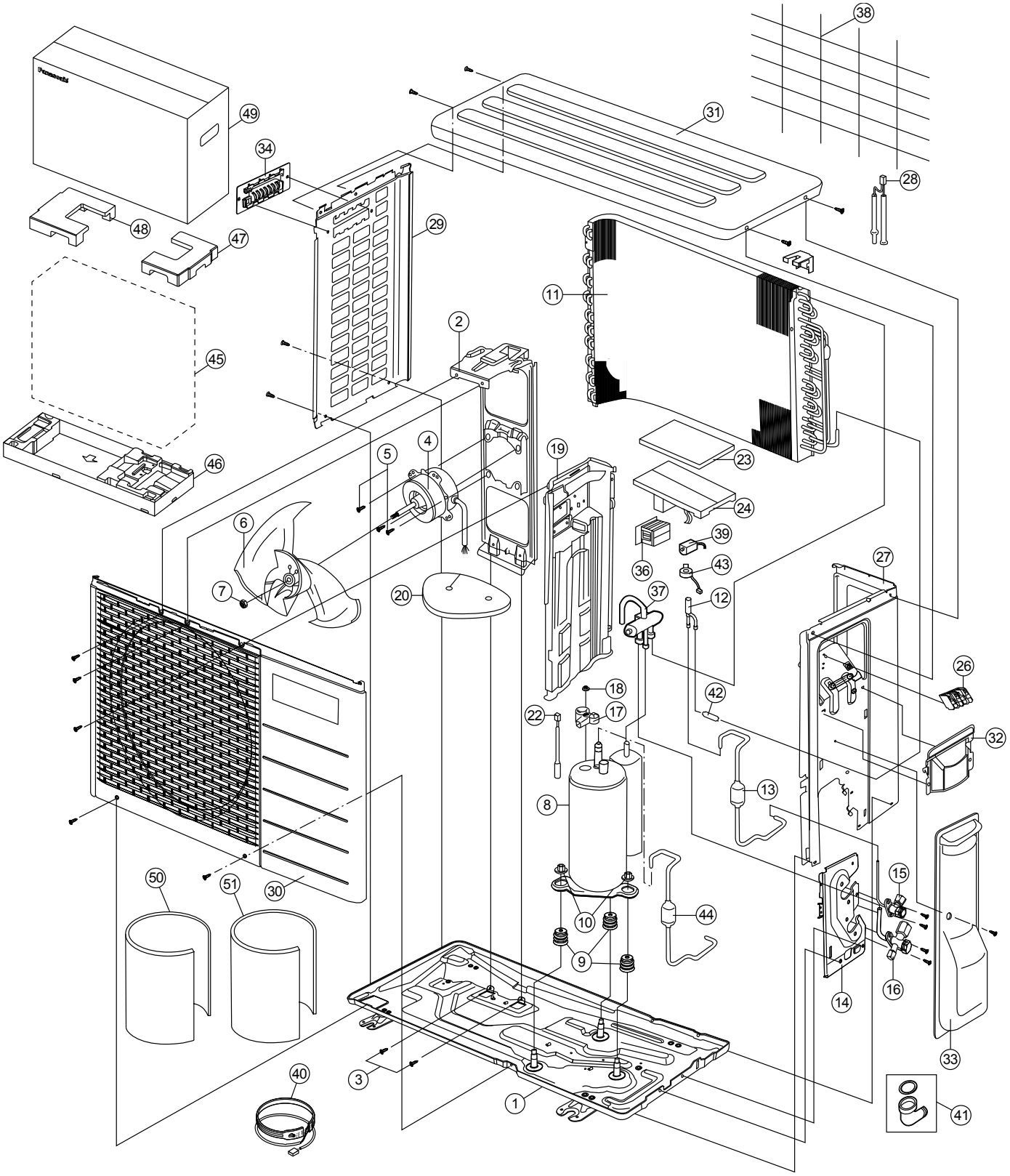

Note
The above exploded view is for the purpose of parts disassembly and replacement.
The non-numbered parts are not kept as standard service parts.

SAFETY	REF. NO.	PART NAME & DESCRIPTION	QTY.	CU-E9RKUA	CU-E12RKUA	REMARK
	1	CHASSIS COMPLETE	1	CWD50K2081A	←	
	2	FAN MOTOR BRACKET	1	CWD541089	←	
	3	SCREW - FAN MOTOR BRACKET	2	CWH551217	←	
⚠	4	FAN MOTOR	1	ARW6404AC	←	O
	5	SCREW - FAN MOTOR MOUNT	4	CWH55252J	←	
	6	PROPELLER FAN ASSY	1	CWH03K1014	←	
	7	NUT - PROPELLER FAN	1	CWH56053J	←	
⚠	8	COMPRESSOR	1	5RS102XHA21	←	O
	9	ANTI - VIBRATION BUSHING	3	CWH50077	←	
	10	NUT - COMPRESSOR MOUNT	3	CWH561096	←	
	11	CONDENSER	1	CWB32C3394	CWB32C4129	
	12	EXPANSION VALVE	1	CWB051016J	←	O
	13	DISCHARGE MUFFLER (EXPANSION VALVE)	1	CWB121021	←	
	14	HOLDER COUPLING	1	CWH351231A	←	
	15	2-WAYS VALVE (LIQUID)	1	CWB021180J	CWB021654	O
	16	3-WAY VALVE (GAS)	1	CWB011374	CWB011367	O
	17	TERMINAL COVER	1	CWH171039A	←	
	18	NUT - TERMINAL COVER	1	CWH7080300J	←	
	19	SOUND PROOF BOARD	1	CWH151172A	←	
	20	SOUND PROOF MATERIAL	1	CWG302570	←	
	22	SENSOR CO-COMP TEMP	1	CWA50C2340	←	O
	23	CONTROL BOARD COVER - TOP	1	CWH131264	←	
⚠	24	ELECTRONIC CONTROLLER - MAIN	1	CWA73C9160R	CWA73C9161R	O
⚠	26	TERMINAL BOARD ASSY	1	CWA28K1154	←	o
	27	CABINET SIDE PLATE CO.	1	CWE04C1226	CWE04C1558	
	28	SENSOR CO-AIR TEMP AND PIPE TEMP	1	CWA50C2793	CWA50C3315	O
	29	CABINET SIDE PLATE	1	CWE041492A	←	
	30	CABINET FRONT PLATE CO.	1	CWE06C1142	←	
	31	CABINET TOP PLATE	1	CWE031018A	←	
	32	PLATE - C. B. COVER TERMINAL	1	CWH131301	←	
	33	CONTROL BOARD COVER CO.	1	CWH13C1345	←	
	34	HANDLE	1	CWE161010	←	
⚠	36	REACTOR	1	G0C193J00002	G0C193J00004	O
	37	4-WAYS VALVE	1	CWB001058	←	O
	38	WIRE NET	1	CWD041161A	←	
⚠	39	V-COIL COMPLETE (4 W. VALVE)	1	CWA43C2432	←	O
	40	HEATER	1	CWA341065	←	
	41	BAG-COMPLETE	1	CWG87C900	←	
	42	STRAINER	1	CWB111061	←	
⚠	43	V-COIL COMPLETE (EXPANSION VALVE)	1	CWA43C2393	←	O
	44	DISCHARGE MUFFLER (4 W. VALVE)	1	CWB121047	←	
	45	BAG	1	CWG861078	←	
	46	BASE BOARD-COMPLETE	1	CWG50C2388	←	
	47	SHOCK ABSORBER (R)	1	CWG712210	←	
	48	SHOCK ABSORBER (L)	1	CWG712209	←	
	49	C.C.CASE	1	CWG565107	←	

SAFETY	REF. NO.	PART NAME & DESCRIPTION	QTY.	CU-E9RKUA	CU-E12RKUA	REMARK
	50	SOUND PROOF MATERIAL	1	CWG302292	←	
	51	SOUND PROOF MATERIAL	1	CWG302569	←	

(Note)

- All parts are supplied from PHAAM, Malaysia (Vendor Code: 00029488).
- “O” marked parts are recommended to be kept in stock.

22.2.2 CU-E18RKUA CU-E24RKUA

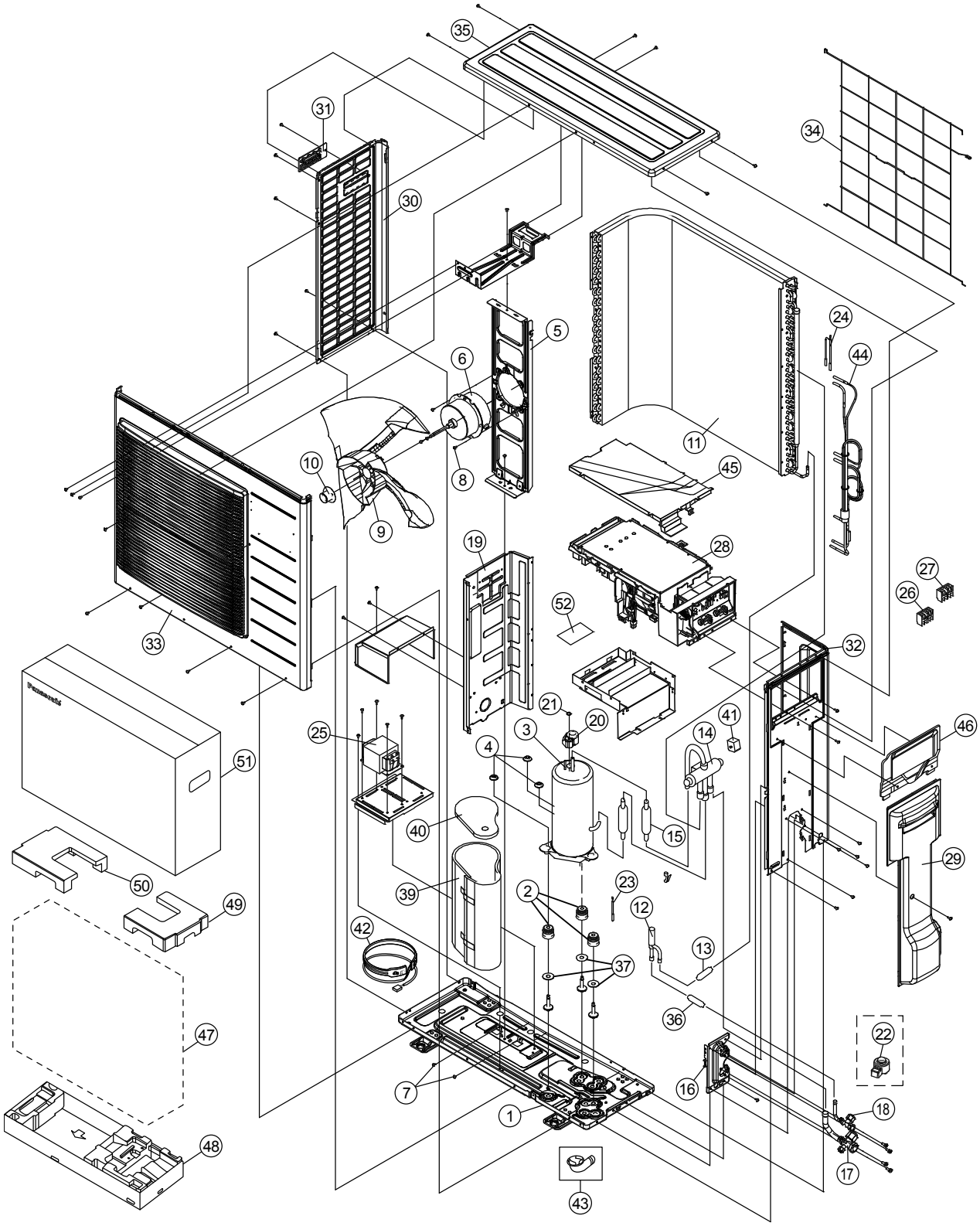

Note
The above exploded view is for the purpose of parts disassembly and replacement.
The non-numbered parts are not kept as standard service parts.

SAFETY	REF. NO.	PART NAME & DESCRIPTION	QTY.	CU-E18RKUA	CU-E24RKUA	REMARK
	1	CHASSIS COMPLETE	1	CWD52K1228A	←	
	2	ANTI - VIBRATION BUSHING	3	CWH50055	←	
⚠	3	COMPRESSOR	1	5KD240XAF21	←	O
	4	NUT - COMPRESSOR MOUNT	3	CWH561049	←	
	5	FAN MOTOR BRACKET	1	CWD541127	←	
⚠	6	FAN MOTOR	1	EHDS80CAC	←	O
	7	SCREW - FAN MOTOR BRACKET	3	CWH551217	←	
	8	SCREW - FAN MOTOR MOUNT	4	CWH551323	←	
	9	PROPELLER FAN ASSY	1	CWH00K1006	←	
	10	NUT - PROPELLER FAN	1	CWH561092	←	
	11	CONDENSER	1	CWB32C3516	←	
	12	EXPANSION VALVE	1	CWB051018J	←	O
	13	STRAINER	1	CWB111076	←	
	14	4-WAYS VALVE	1	CWB001057	←	O
	15	DISCHARGE MUFFLER (4 W. VALVE)	1	CWB121055	←	
	16	HOLDER COUPLING	1	CWH351228A	←	
	17	3-WAY VALVE (GAS)	1	CWB011672	CWB011363	O
	18	2-WAYS VALVE (LIQUID)	1	CWB021464	←	O
	19	SOUND PROOF BOARD	1	CWH151197	←	
	20	TERMINAL COVER	1	CWH171039A	←	
	21	NUT - TERMINAL COVER	1	CWH7080300J	←	
⚠	22	V-COIL COMPLETE (EXPANSION VALVE)	1	CWA43C2393	←	O
	23	SENSOR CO-COMP TEMP	1	CWA50C2689	←	O
	24	SENSOR CO-AIR TEMP AND PIPE TEMP	1	CWA50C2710	←	O
⚠	25	REACTOR	1	G0C452J00002	←	O
⚠	26	TERMINAL BOARD ASSY	1	CWA28K1277	←	O
⚠	27	TERMINAL BOARD ASSY	1	CWA28K1076J	←	O
⚠	28	ELECTRONIC CONTROLLER - MAIN	1	CWA73C9162R	CWA73C9163R	O
	29	CONTROL BOARD COVER - COMPLETE	1	CWH13C1210	←	
	30	CABINET SIDE PLATE	1	CWE041490A	←	
	31	HANDLE	1	CWE161010	←	
	32	CABINET SIDE PLATE	1	CWE041488A	←	
	33	CABINET FRONT PLATE CO.	1	CWE06K1070	←	
	34	WIRE NET	1	CWD041128A	←	
	35	CABINET TOP PLATE	1	CWE031131A	←	
	36	RECEIVER	1	CWB14030	←	
	37	PACKING	3	CWB81043	←	
	39	SOUND PROOF MATERIAL	1	CWG302245	←	
	40	SOUND PROOF MATERIAL	1	CWG302246	←	
⚠	41	V-COIL COMPLETE (4 W. VALVE)	1	CWA43C2392	←	O
	42	HEATER	1	CWA341067	←	
	43	BAG-COMPLETE	1	CWG87C900	←	
	44	TUBE ASSY CO. (CAP. TUBE)	1	CWT01C6093	←	
	45	CONTROL BOARD COVER - TOP	1	CWH131333	←	
	46	CONTROL BOARD COVER	1	CWH131332	←	
	47	BAG	1	CWG861154	←	
	48	BASE BOARD-COMPLETE	1	CWG62C1082	←	

SAFETY	REF. NO.	PART NAME & DESCRIPTION	QTY.	CU-E18RKUA	CU-E24RKUA	REMARK
	49	SHOCK ABSORBER (R)	1	CWG712880	←	
	50	SHOCK ABSORBER (L)	1	CWG712879	←	
	51	C.C. CASE	1	CWG565614	←	
⚠	52	ELECTRONIC CONTROLLER - NF	1	CWA747077	←	

(Note)
- All parts are supplied from PAPAMY, Malaysia (Vendor Code: 00029488).
- “O” marked parts are recommended to be kept in stock.

Printed in Malaysia
FB0115-0